HOW TO USE THIS MANUAL

GENERAL INFORMATION

1. GENERAL DESCRIPTION

(a) This manual is written in accordance with SAE J2008.
  (1) Diagnosis
  (2) Removing / Installing, Replacing, Disassembling / Reassembling, Checking and Adjusting
  (3) Final Inspection

(b) The following procedures are omitted from this manual. However, these procedures must be performed.
  (1) Use a jack or lift to perform operations.
  (2) Clean all removed parts.
  (3) Perform a visual check.

2. INDEX

(a) An alphabetical INDEX section is provided at the end of the manual as a reference to help you find the item to be repaired.

3. PREPARATION

(a) Use of Special Service Tools (SST) and Special Service Materials (SSM) may be required, depending on the repair procedure. Be sure to use SST and SSM when they are required and follow the working procedures properly. A list of SST and SSM is in the "Preparation" section of this manual.

4. REPAIR PROCEDURES

(a) A component illustration is placed under the title where necessary.

(b) Non-reusable parts, grease application areas, precoated parts and torque specifications are noted in the component illustrations.
The following illustration is an example.

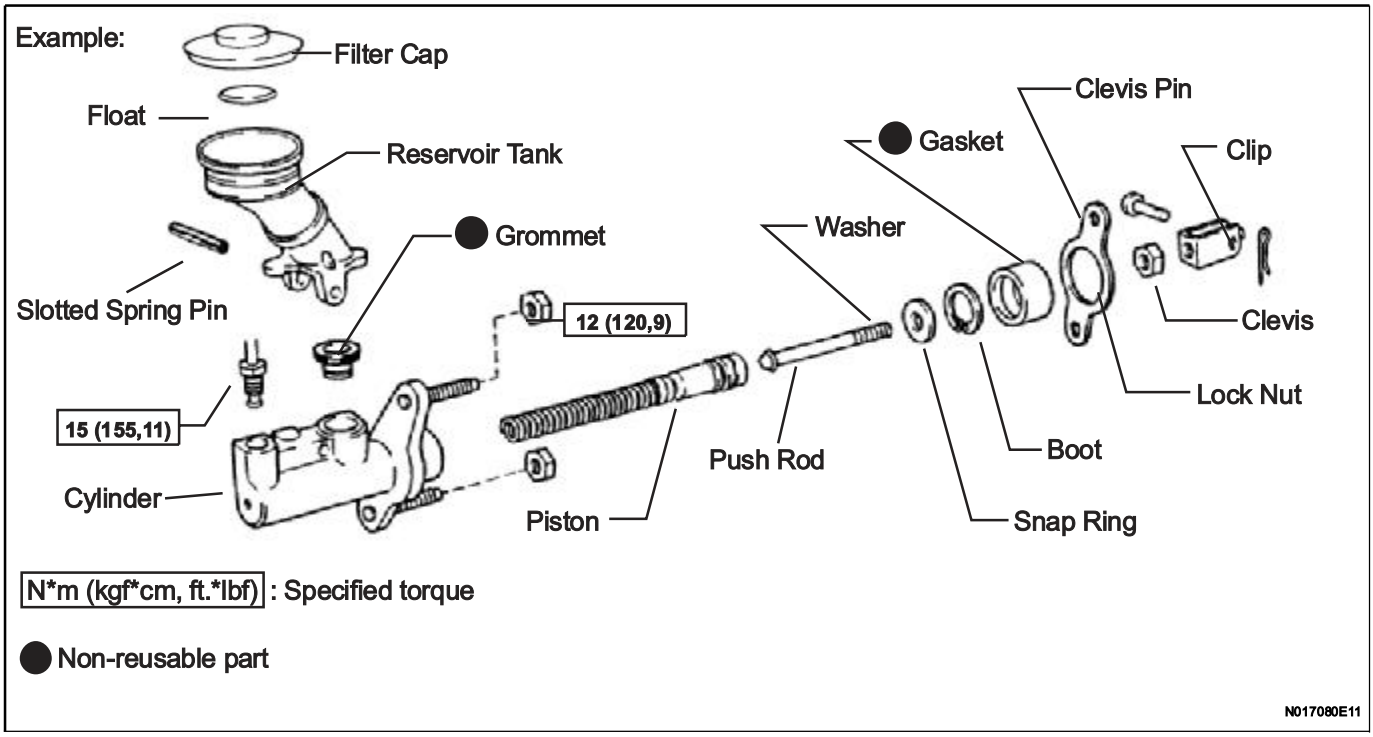

(c) Torque specifications, grease application areas and non-reusable parts are emphasized in the procedures.
HINT:
There are cases where such information can only be explained by using an illustration. In these cases, torque, oil and other information are described in the illustration.

(d) Only items with key points are described in the text. What to do and other details are explained using illustrations next to the text. Both the text and illustrations are accompanied by standard values and notices.

Illustration	What to do and where to do it
Task heading	What work will be performed
Explanation text	• How to perform the task • Information such as specifications and warnings, which are written in boldface text

(e) Illustrations of similar vehicle models are sometimes used. In these cases, minor details may be different from the actual vehicle.

(f) Procedures are presented in a step-by-step format.

5. SERVICE SPECIFICATIONS

(a) SPECIFICATIONS are presented in boldface text throughout the manual. The specifications are also found in the "Service Specifications" section for reference.

6. TERM DEFINITIONS

CAUTION	Possibility of injury to you or other people.
NOTICE	Possibility of damage to components being repaired.
HINT	Provides additional information to help you perform repairs.

7. INTERNATIONAL SYSTEM OF UNITS

(a) The units used in this manual comply with the International System of Units (SI UNIT) standard. Units from the metric system and the English system are also provided.
Example:
Torque: 30 N*m (310 kgf*cm, 22 ft.*lbf)

IN

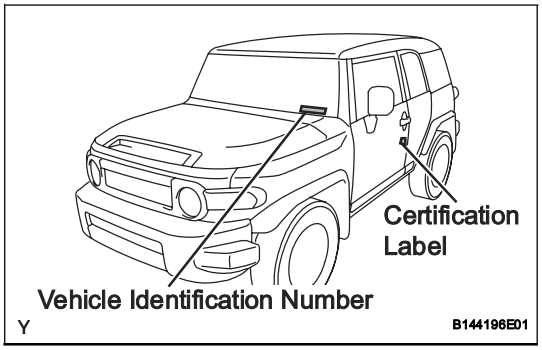

IDENTIFICATION INFORMATION

VEHICLE IDENTIFICATION AND SERIAL NUMBERS

1. VEHICLE IDENTIFICATION NUMBER

(a) The vehicle identification number is stamped on the vehicle body and on the certification label, as shown in the illustration.
(1) Vehicle Identification Number
(2) Certification Label

2. ENGINE SERIAL NUMBER AND TRANSMISSION SERIAL NUMBER

(a) The engine serial number is stamped on the cylinder block of the engine and the transmission serial number is stamped on the housing as shown in the illustration.
(1) Engine Serial Number

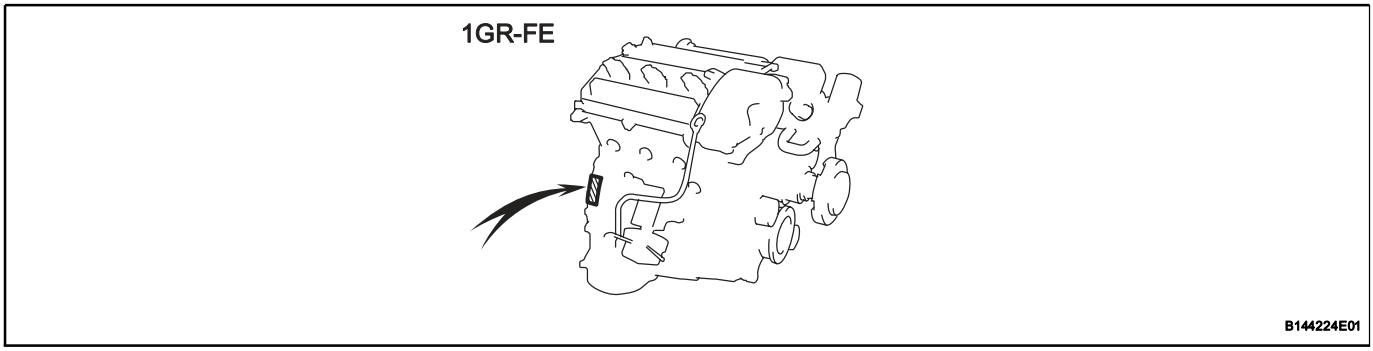

(2) Transmission Serial Number

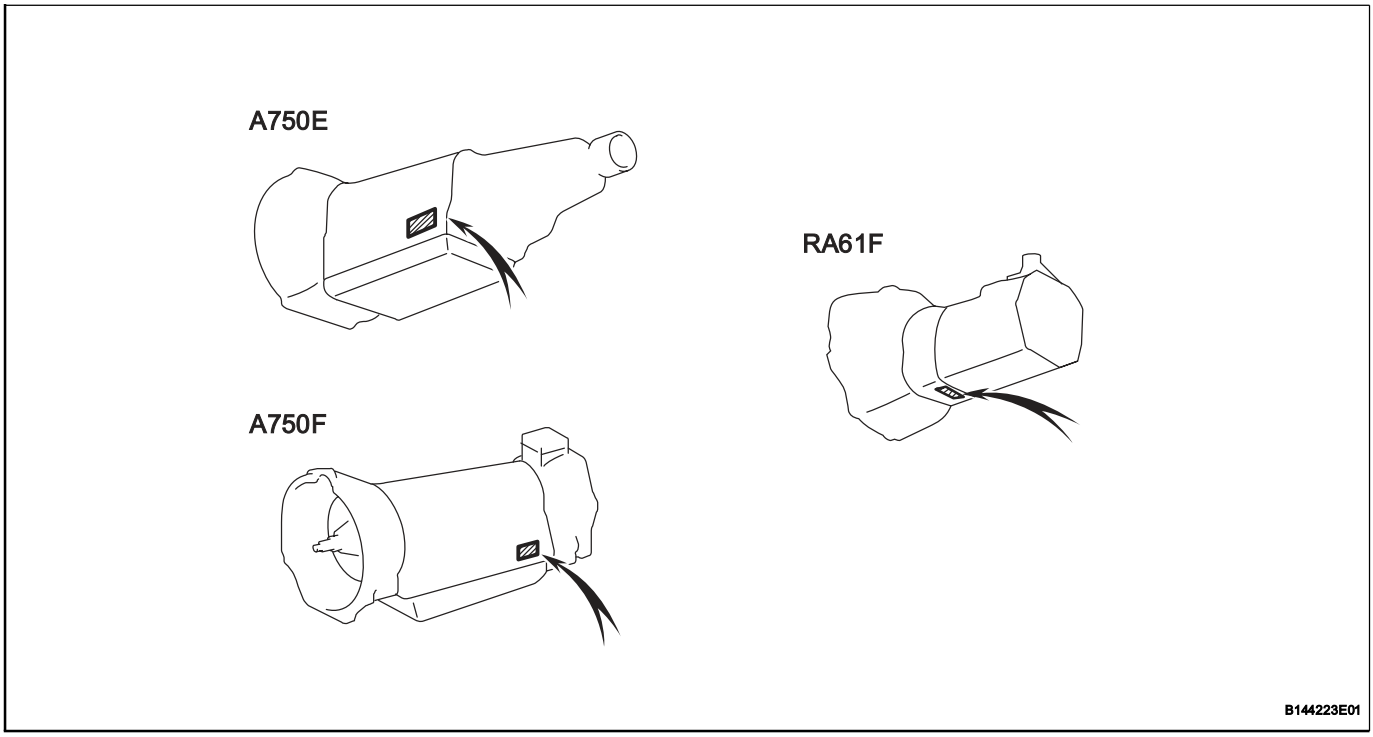

REPAIR INSTRUCTION

PRECAUTION

1. BASIC REPAIR HINT

(a) HINTS ON OPERATIONS

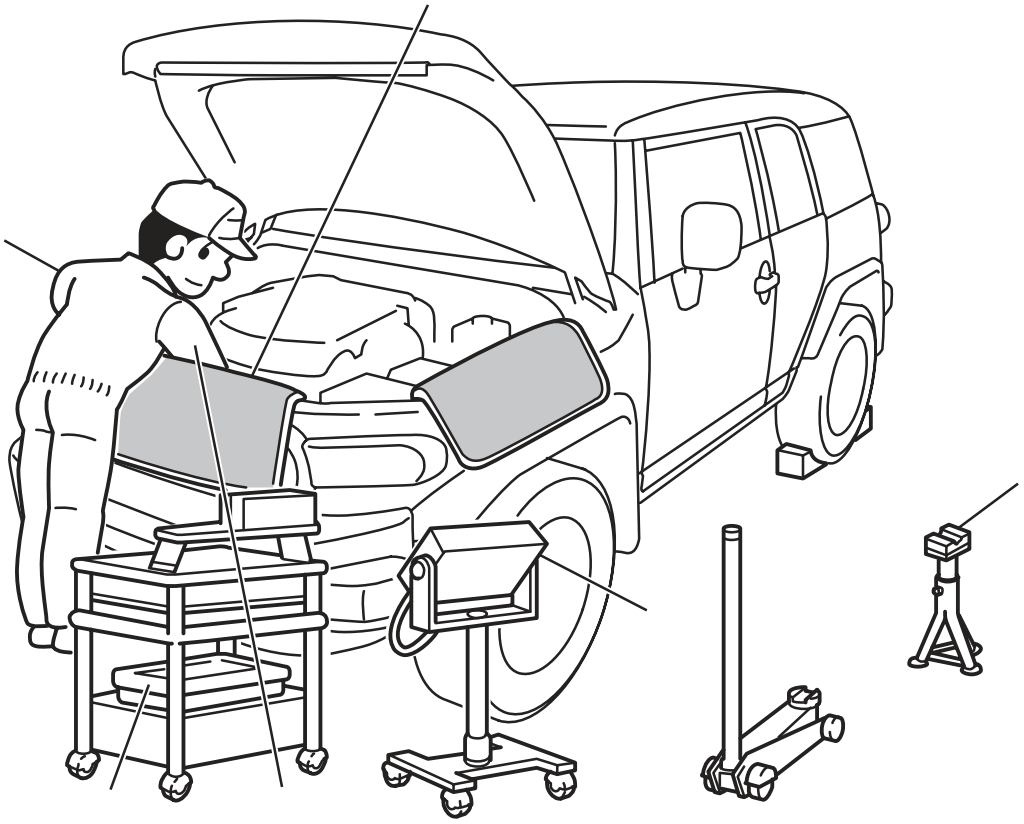

Y B144197E01

1	Attire	• Always wear a clean uniform. • A hat and safety shoes must be worn.
2	Vehicle protection	Prepare a grille cover, fender cover, seat cover and floor mat before starting the operation.
3	Safe operation	• When working with 2 or more persons, be sure to check safety for one another. • When working with the engine running, make sure to provide ventilation for exhaust fumes in the workshop. • If working on high temperature, high pressure, rotating, moving, or vibrating parts, wear appropriate safety equipment and take extra care not to injure yourself or others. • When jacking up the vehicle, be sure to support the specified location with a safety stand. • When lifting up the vehicle, use appropriate safety equipment.
4	Preparation of tools and measuring gauge	Before starting the operation, prepare a tool stand, SST, gauge, oil and parts for replacement.
5	Removal and installation, disassembly and assembly operations	• Diagnose with a thorough understanding of proper procedures and of the reported problem. • Before removing parts, check the general condition of the assembly and for deformation and damage. • When the assembly is complicated, take notes. For example, note the total number of electrical connections, bolts, or hoses removed. Add matchmarks to ensure reassembly of components to their original positions. Temporarily mark hoses and their fittings if needed. • Clean and wash the removed parts if necessary and assemble them after a thorough check.

6	Removed parts	• Place removed parts in a separate box to avoid mixing them up with new parts or contaminating new parts. • For non-reusable parts such as gaskets, O-rings, and self-locking nuts, replace them with new ones as instructed in this manual. • Retain the removed parts for customer inspection, if requested.

IN

(b) JACKING UP AND SUPPORTING VEHICLE
(1) Care must be taken when jacking up and supporting the vehicle. Be sure to lift and support the vehicle at the proper locations.

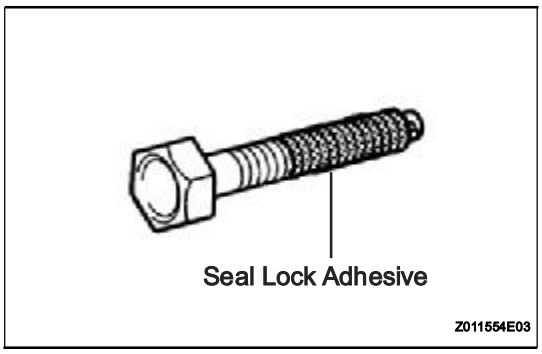

(c) PRECOATED PARTS
(1) Precoated parts are bolts and nuts that are coated with a seal lock adhesive at the factory.
(2) If a precoated part is retightened, loosened or moved in any way, it must be recoated with the specified adhesive.
(3) When reusing a precoated part, clean off the old adhesive and dry the part with compressed air. Then apply new seal lock adhesive appropriate to that part.
(4) Some seal lock agents harden slowly. You may have to wait for the seal lock adhesive to harden.

(d) GASKETS
(1) When necessary, use a sealer on gaskets to prevent leaks.

(e) BOLTS, NUTS AND SCREWS
(1) Carefully follow all the specifications for tightening torques. Always use a torque wrench.

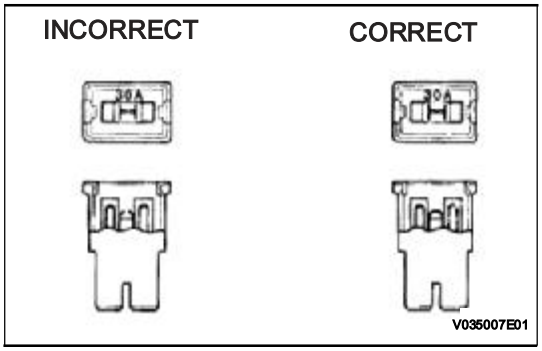

(f) FUSES
(1) When inspecting a fuse, check that the wire of the fuse is not broken.
(2) When replacing fuses, be sure that the new fuse has the correct amperage rating. Do not exceed the rating or use one with a lower rating.

Illustration	Symbol	Part Name	Abbreviation
N	N	FUSE	FUSE

Illustration	Symbol	Part Name	Abbreviation
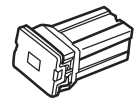 N	N	MEDIUM CURRENT FUSE	M-FUSE
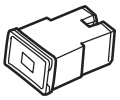 N	N	HIGH CURRENT FUSE	H-FUSE
N	N	FUSIBLE LINK	FL
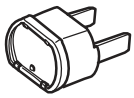 N	N	CIRCUIT BREAKER	CB

(g) CLIPS

(1) The removal and installation methods of typical clips used for vehicle body parts are shown in the table below.

HINT:

If clips are damaged during a procedure, always replace the damaged clip with a new clip.

IN

Shape (Example)	Illustration	Procedures
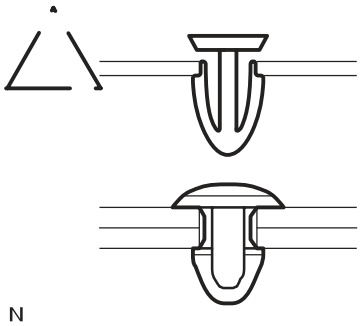 N	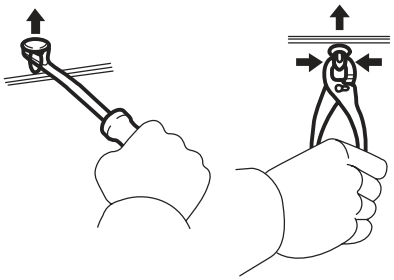 N	1. Remove the clips with a clip remover or pliers.
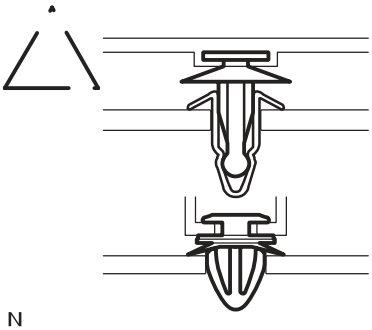 N	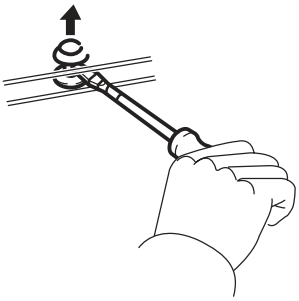 N	1. Remove the clips with a clip remover or screwdriver.
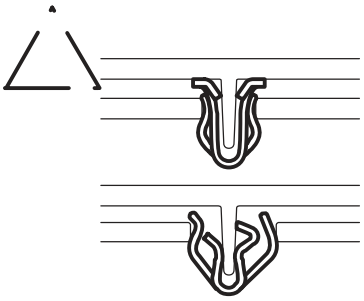 N	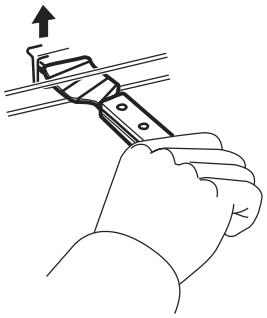 N	1. Remove the clips with a wide scraper to prevent panel damage.
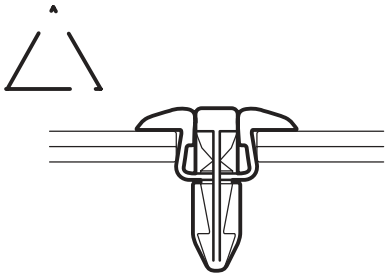 N	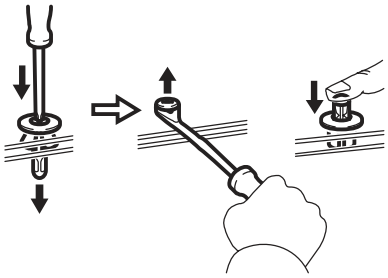 N	1. Remove the clips by pushing the center pin through and prying out the shell.

Shape (Example)	Illustration	Procedures
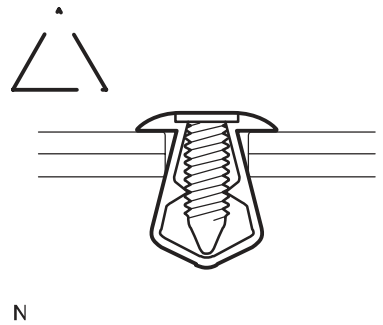 N	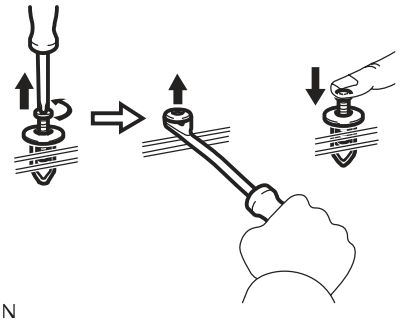 N	1. Remove the clips by unscrewing the center pin and prying out the shell.
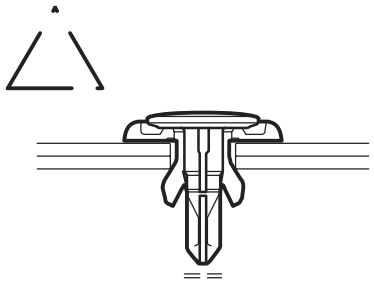 N	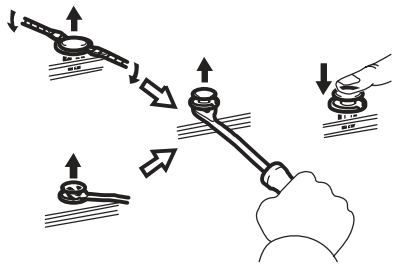 N	1. Remove the clips by prying out the pin and then prying out the shell.

(h) CLAWS

(1) The removal and installation methods of typical claws used for vehicle body parts are shown in the table below.

HINT:

If claws are damaged during a procedure, always replace the damaged claws with new caps or covers.

Shape (Example)	Illustration	Procedures
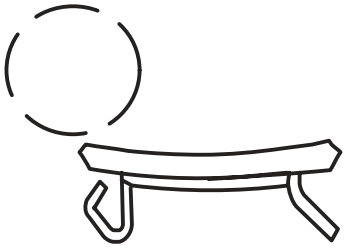	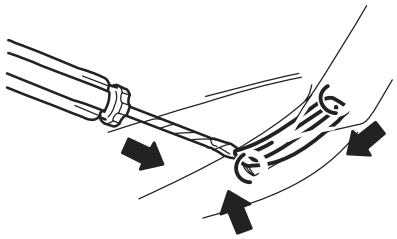	1. Using a screwdriver, detach the claws and remove the cap or covers.
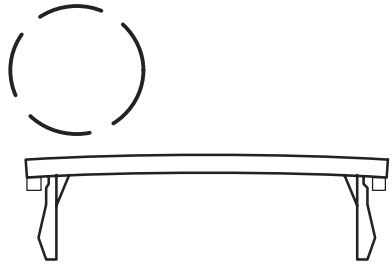	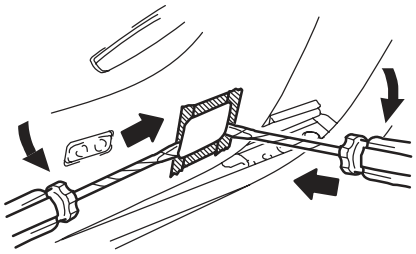	1. Using a screwdriver, detach the claws and remove the cap or covers.

IN

Shape (Example)	Illustration	Procedures
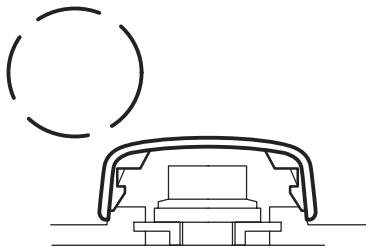	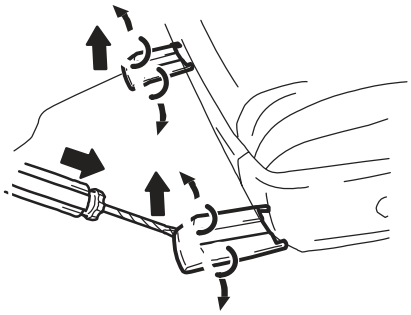	1. Using a screwdriver, detach the claws and remove the cap or covers.

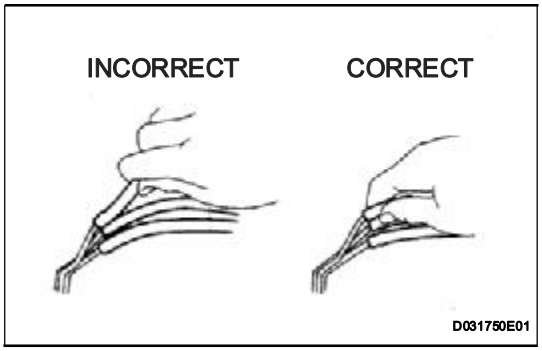

(i) REMOVAL AND INSTALLATION OF VACUUM HOSES

(1) To disconnect a vacuum hose, pull and twist from the end of the hose. Do not pull from the middle of the hose as this may cause damage.

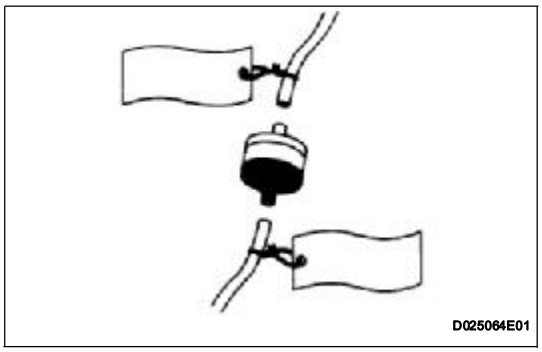

(2) When disconnecting vacuum hoses, use tags to identify where they should be reconnected.

(3) After completing any hose related repairs, double check that the vacuum hoses are properly connected. The label under the hood shows the proper layout.

(4) When using a vacuum gauge, never force the hose onto a connector that is too large. If a hose has been stretched, it may leak air. Use a step-down adapter if necessary.

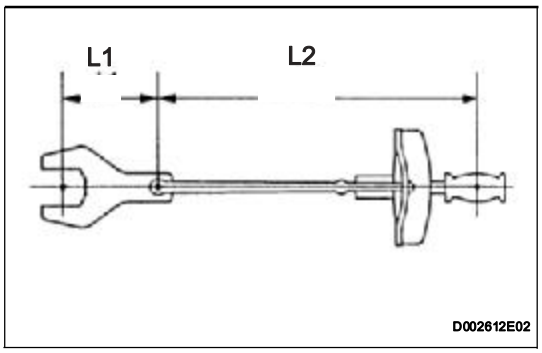

(j) TORQUE WHEN USING TORQUE WRENCH WITH EXTENSION TOOL

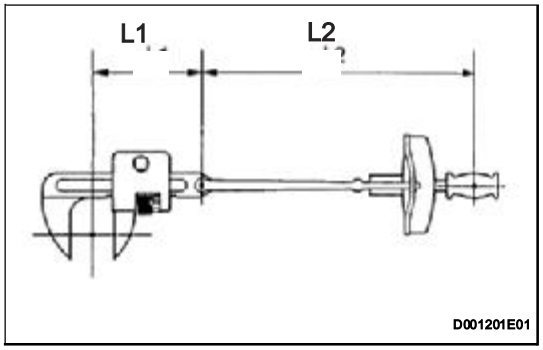

(1) Use the formula below to calculate special torque values for situations where SST or an extension tool is combined with a torque wrench.
Formula:
T' = L2 / (L1 + L2) * T

T'	Reading of torque wrench {N*m (kgf*cm, ft.*lbf)}
T	Torque {N*m (kgf*cm, ft.*lbf)}
L1	Length of SST or extension tool {cm (in.)}
L2	Length of torque wrench {cm (in.)}

NOTICE:
If an extension tool or SST is combined with a torque wrench and the wrench is used to tighten to a torque specification in this manual, the actual torque will be excessive and parts will be damaged.

2. **FOR VEHICLES EQUIPPED WITH SRS AIRBAG AND FRONT SEAT OUTER BELT ASSEMBLY WITH PRETENSIONER**
The FJ CRUISER is equipped with a Supplemental Restraint System (SRS).
CAUTION:
Failure to carry out the service operations in the correct sequence could cause the SRS to unexpectedly deploy during servicing and lead to serious injury. Furthermore, if a mistake is made when servicing the SRS, it is possible that the SRS may fail to operate properly. Before servicing (including removal or installation of parts, inspection or replacement), be sure to read the following section carefully.
(a) GENERAL NOTICE
(1) As malfunctions of the SRS are difficult to confirm, the Diagnostic Trouble Codes (DTCs) become the most important source of information when troubleshooting. When troubleshooting the SRS, always check the DTCs before disconnecting the battery.

IN

(2) Work must be started at least 90 seconds after the ignition switch is turned OFF and after the cable is disconnected from the negative (-) battery terminal.
(The SRS is equipped with a backup power source. If work is started within 90 seconds after turning the ignition switch OFF and disconnecting the cable from the negative (-) battery terminal, the SRS may deploy.
When the cable is disconnected from the negative (-) battery terminal, clock and audio system memory is erased. Before starting work, make a note of the settings of each memory system. When work is finished, reset the clock and audio system as before.
CAUTION:
Never use a backup power source (battery or other) to avoid erasing system memory. The backup power source may inadvertently power the SRS and cause it to deploy.

(3) Even in cases of a minor collision where the SRS does not deploy, the steering wheel pad, front passenger airbag assembly, front seat side airbag assembly, curtain shield airbag assembly and seat belt pretensioner should be inspected

(4) In minor collisions where the SRS does not deploy, the steering wheel pad, front passenger airbag assembly, front seat side airbag assembly, curtain shield airbag assembly and seat belt pretensioner should be inspected before further use of the vehicle.

(5) Never use SRS parts from another vehicle. When replacing parts, use new parts.

(6) Before repairs, remove the airbag sensor assemblies if impacts are likely to be applied to the sensor during repairs.

(7) Never disassemble and attempt to repair the steering wheel pad, front passenger airbag assembly, side airbag assembly, curtain shield airbag assembly and seat belt pretensioner.

(8) Replace the steering wheel pad, front passenger airbag assembly, front seat side airbag assembly, curtain shield airbag assembly and seat belt pretensioner if: 1) damage has occurred from being dropped, or 2) cracks, dents or other defects in the case, bracket or connector are present.

(9) Do not directly expose the airbag sensor assemblies or airbag assemblies to hot air or flames.

(10) Use an ohmmeter / voltmeter with high impedance (10 kΩ/V minimum) for troubleshooting electrical circuits.

(11)Information labels are attached to the SRS components. Follow the instructions on the labels.

(12)After work on the SRS is completed, check the SRS warning light.

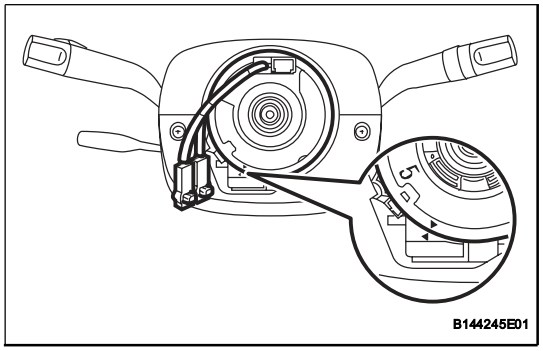

(b) SPIRAL CABLE

(1) The steering wheel must be fitted correctly to the steering column with the spiral cable at the neutral position, as cable disconnection and other problems may occur. Refer to the information about correct installation of the steering wheel.

(c) STEERING PAD

(1) Always place a removed or new steering pad surface upward as shown in the illustration. Placing the horn button with the pad surface facing down could cause a serious accident if the airbag inflates. Also, do not place anything on top of the horn button.

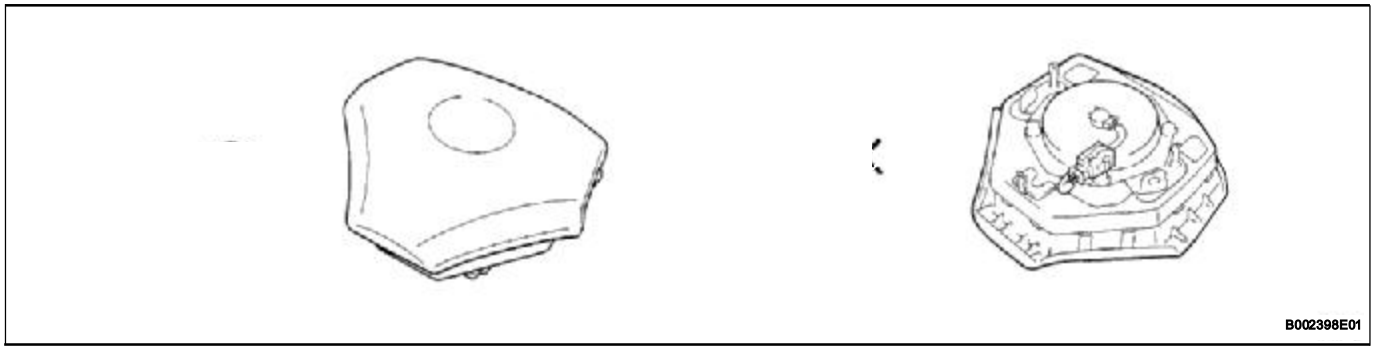

(2) Never measure the resistance of the airbag squib. This may cause the airbag to inflate, which could cause serious injury.

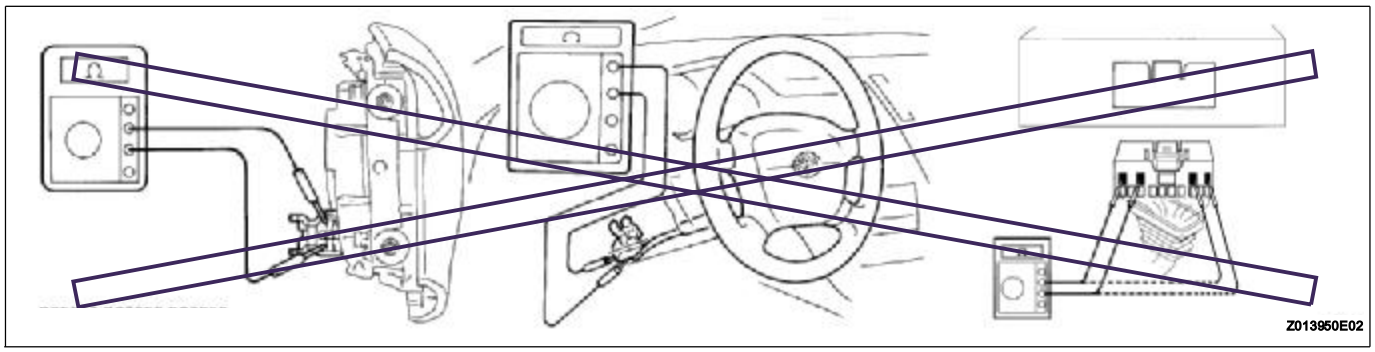

(3) Grease or detergents of any kind should not be applied to the horn button.

(4) Store the horn button assembly in an area where the ambient temperature is below 93°C (200°F), the humidity is not high and there is no electrical noise.

IN

(5) When using electric welding anywhere on the vehicle, disconnect the airbag ECU connectors (4 pins). These connectors contain shorting springs. This feature reduces the possibility of the airbag deploying due to currents entering the squib wiring.
(6) When disposing of the vehicle or the horn button assembly by itself, the airbag should be deployed using SST before disposal. Activate the airbag in a safe place away from electrical noise.

(d) FRONT PASSENGER AIRBAG ASSEMBLY
(1) Always place a removed or new front passenger airbag assembly with the pad surface facing upward as shown in the illustration. Placing the airbag assembly with the airbag inflation direction facing down could cause a serious accident if the airbag inflates.

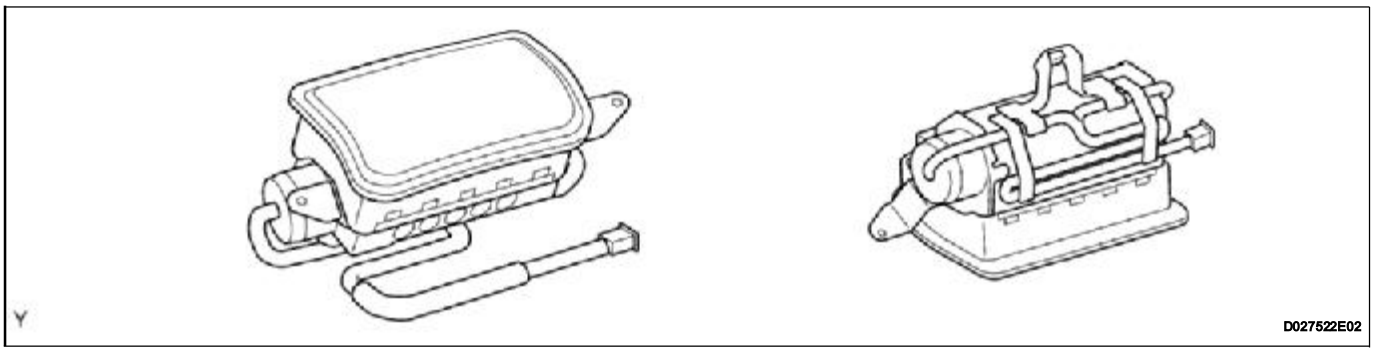

(2) Never measure the resistance of the airbag squib. This may cause the airbag to inflate, which could cause serious injury.

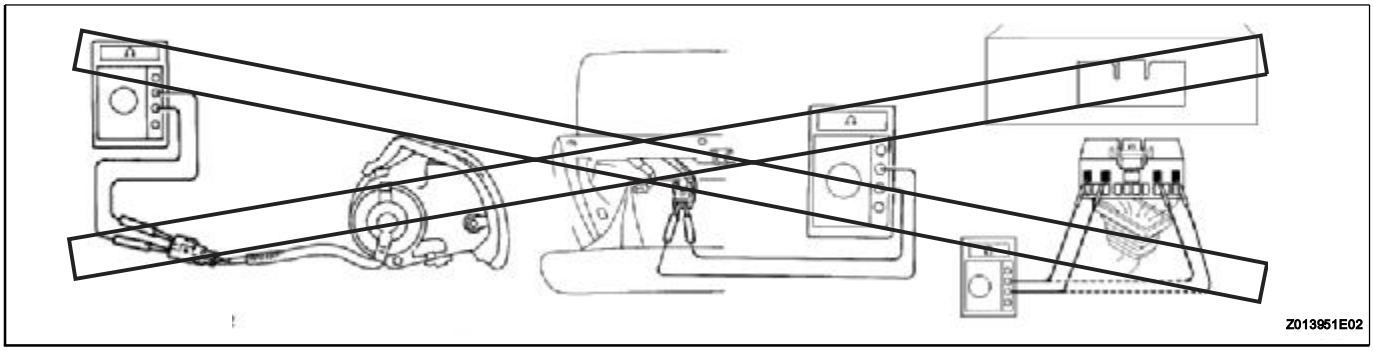

(3) Grease or detergents of any kind should not be applied to the front passenger airbag assembly.
(4) Store the airbag assembly in an area where the ambient temperature is below 93°C (200°F), the humidity is not high and there is no electrical noise.
(5) When using electric welding anywhere on the vehicle, disconnect the airbag ECU connectors (4 pins). These connectors contain shorting springs. This feature reduces the possibility of the airbag deploying due to currents entering the squib wiring.

(6) When disposing of the vehicle or the airbag assembly unit by itself, the airbag should be deployed using SST before disposal. Activate the airbag in a safe place away from electrical noise.

(e) CURTAIN SHIELD AIRBAG ASSEMBLY

(1) Always place a removed or new curtain shield airbag assembly in a clear plastic bag, and keep it in a safe place.

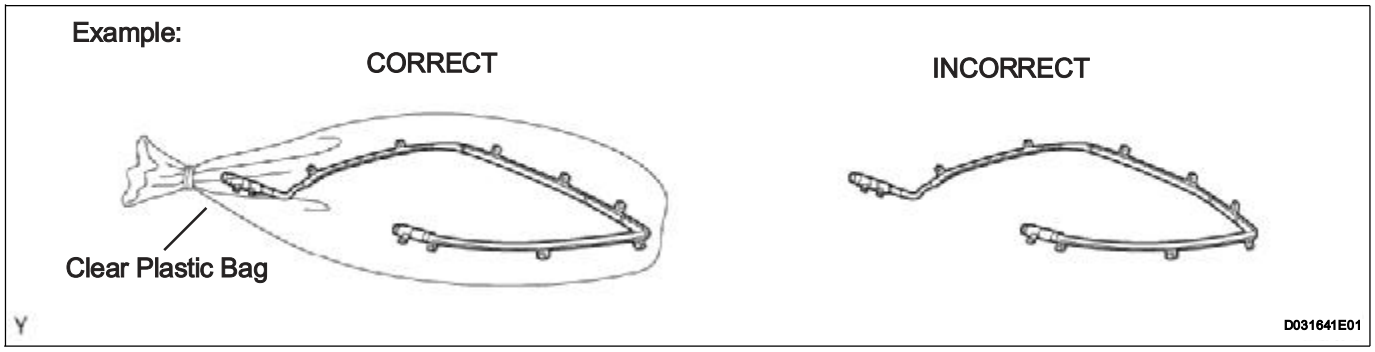

CAUTION:
The plastic bag is not reusable.
NOTICE:
Never disassemble the curtain shield airbag assembly.

(2) Never measure the resistance of the airbag squib. This may cause the airbag to inflate, which could cause serious injury.

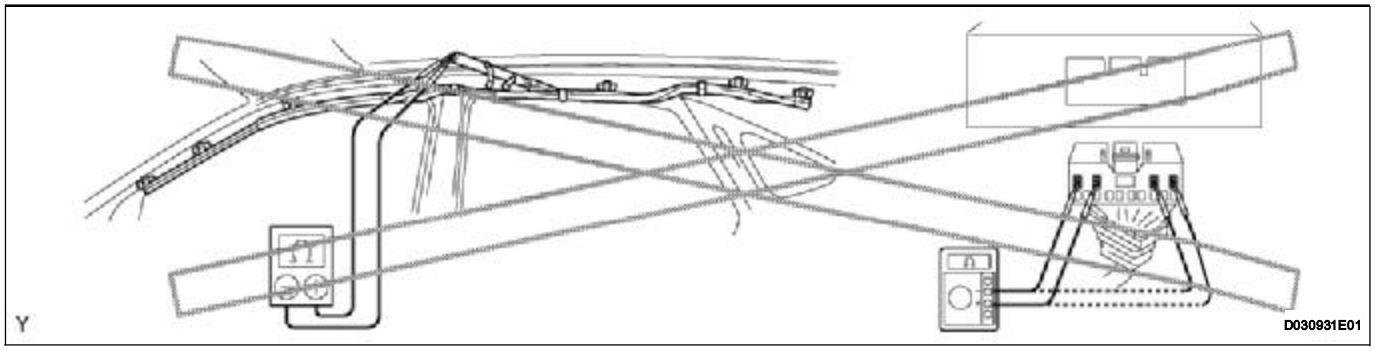

(3) Grease or detergents of any kind should not be applied to the curtain shield airbag assembly.

(4) Store the airbag assembly in an area where the ambient temperature is below 93°C (200°F), the humidity is not high and there is no electrical noise.

(5) When using electric welding anywhere on the vehicle, disconnect the airbag ECU connectors (4 pins). These connectors contain shorting springs. This feature reduces the possibility of the airbag deploying due to currents entering the squib wiring.

IN

(6) When disposing of a vehicle or the airbag assembly unit by itself, the airbag should be deployed using SST before disposal. Activate the airbag in a safe place away from electrical noise.

(f) FRONT SEAT SIDE AIRBAG ASSEMBLY

(1) Always place a removed or new front seat airbag assembly with the airbag inflation direction facing up.

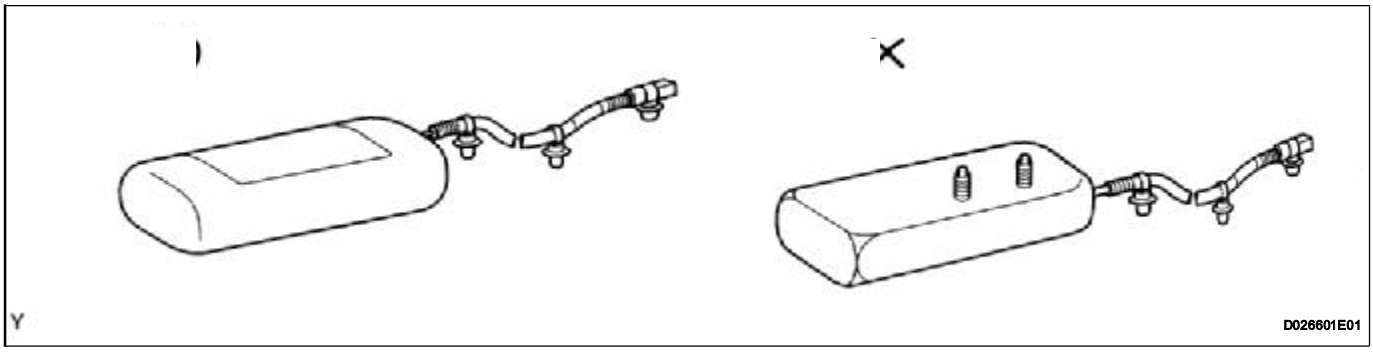

(2) Never measure the resistance of the airbag squib. This may cause the airbag to inflate, which could cause serious injury.

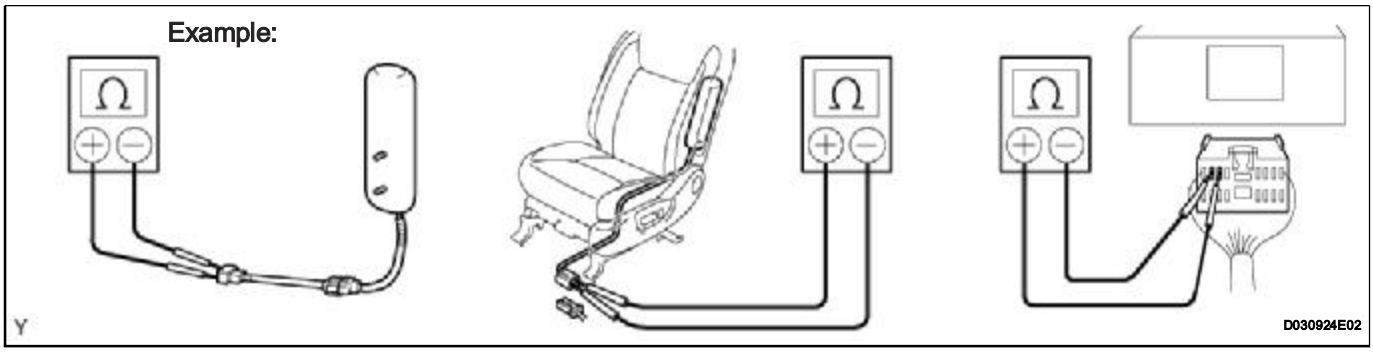

(3) Grease or detergents of any kind should not be applied to the front seat airbag assembly.

(4) Store the airbag assembly in an area where the ambient temperature is below 93°C (200°F), the humidity is not high and there is no electrical noise.

(5) When using electric welding anywhere on the vehicle, disconnect the airbag ECU connectors (2 pins). These connectors contain shorting springs. This feature reduces the possibility of the airbag deploying due to currents entering the squib wiring.

(6) When disposing of a vehicle or the airbag assembly unit by itself, the airbag should be deployed using SST before disposal. Activate the airbag in a safe place away from electrical noise.

(g) FRONT SEAT OUTER BELT ASSEMBLY WITH PRETENSIONER

(1) Never measure the resistance of the seat outer belt. This may cause the pretensioner of the seat belt to activate, which could cause serious injury.

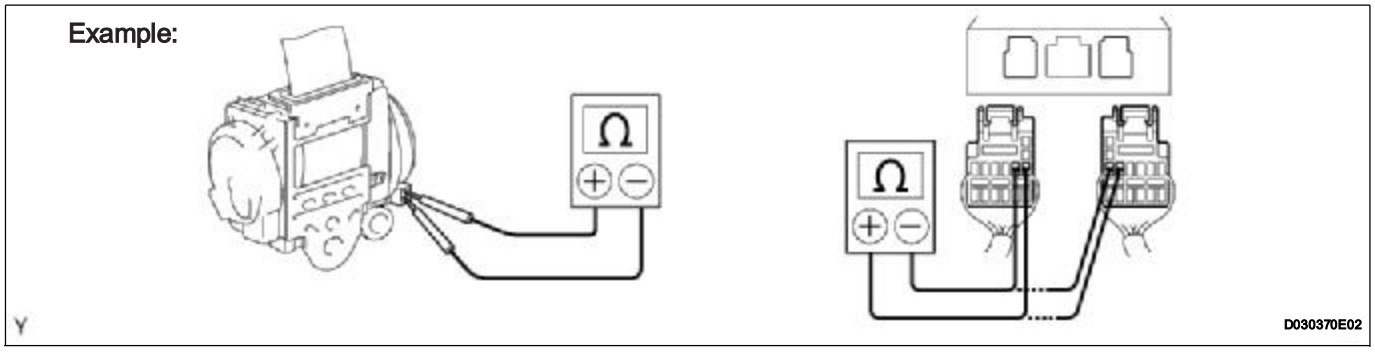

(2) Never disassemble the seat outer belt.

(3) Never install the seat outer belt on another vehicle.

(4) Store the seat outer belt in an area where the ambient temperature is below 80°C (176°F), the humidity is not high and there is no electrical noise.

(5) When using electric welding anywhere on the vehicle, disconnect the airbag ECU connectors (2 pins). These connectors contain shorting springs. This feature reduces the possibility of the pretensioner deploying due to currents entering the squib wiring.

(6) When disposing of a vehicle or the seat outer belt assembly by itself, the seat outer belt should be activated before disposal. Activate it in a safe place away from electrical noise.

(7) As the seat outer belt is hot after the pretensioner is activated, allow some time for it to cool down sufficiently before disposal. Never apply water to try to cool down the seat outer belt.

(8) Grease, detergents, oil or water should not be applied to the front seat outer belt.

(h) AIRBAG SENSOR ASSEMBLY

(1) Never reuse an airbag sensor assembly that has been involved in a collision where the SRS has deployed.

(2) The connectors to the airbag sensor assembly should be connected or disconnected with the sensor placed on the floor. If the connectors are connected or disconnected while the airbag sensor assembly is not placed on the floor, the SRS may activate.

(3) Work must be started at least 90 seconds after the ignition switch is turned OFF and the cable is disconnected from the negative (-) battery terminal, even if only loosening the set bolts of the airbag sensor assembly.

IN

(i) WIRE HARNESS AND CONNECTOR
(1) The SRS wire harness is integrated with the instrument panel wire harness assembly. All the connectors in the system are a standard yellow color. If the SRS wire harness becomes disconnected or the connector becomes broken, repair or replace it.

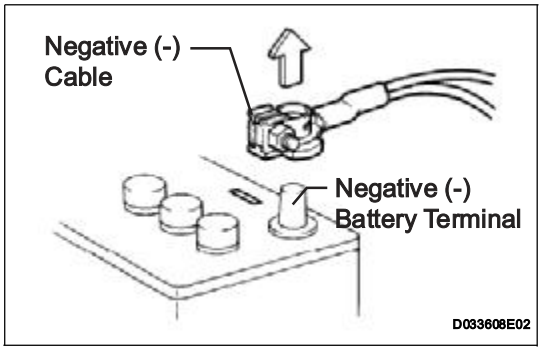

3. ELECTRONIC CONTROL

(a) REMOVAL AND INSTALLATION OF BATTERY TERMINAL

NOTICE:

Certain systems need to be initialized after disconnecting and reconnecting the cable from the negative (-) battery terminal.

(1) Before performing electronic work, disconnect the cable from the negative (-) battery terminal to prevent component and wire damage caused by accidental short circuits.
(2) When disconnecting the cable, turn the ignition switch off and the headlight dimmer switch OFF and loosen the cable nut completely. Perform these operations without twisting or prying the cable. Then disconnect the cable.
(3) Clock settings, radio settings, audio system memory, DTCs and other data are erased when the cable is disconnected from the negative (-) battery terminal. Write down any necessary data before disconnecting the cable.

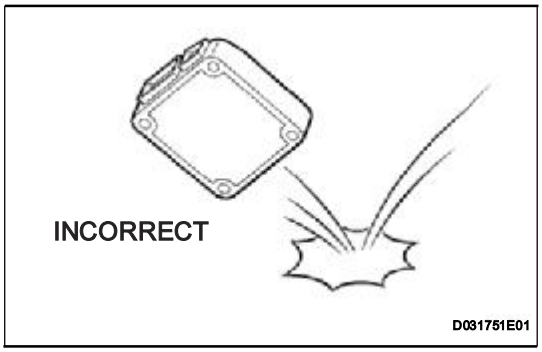

(b) HANDLING OF ELECTRONIC PARTS
(1) Do not open the cover or case of the ECU unless absolutely necessary. If the IC terminals are touched, the IC may be rendered inoperative by static electricity.
(2) Do not pull the wires when disconnecting electronic connectors. Pull the connector.
(3) Be careful not to drop electronic components, such as sensors or relays. If they are dropped on a hard surface, they should be replaced.
(4) When cleaning the engine with steam, protect the electronic components, air filter and emission-related components from water.
(5) Never use an impact wrench to remove or install temperature switches or temperature sensors.
(6) When measuring the resistance of a wire connector, insert the tester probe carefully to prevent terminals from bending.

4. REMOVAL AND INSTALLATION OF FUEL CONTROL PARTS

(a) PLACE FOR REMOVING AND INSTALLING FUEL SYSTEM PARTS
(1) Work in a location with good air ventilation that does not have welders, grinders, drills, electric motors, stoves, or any other ignition sources.

(2) Never work in a pit or near a pit as vaporized fuel will collect in those places.

(b) REMOVING AND INSTALLING FUEL SYSTEM PARTS

(1) Prepare a fire extinguisher before starting the operation.

(2) To prevent static electricity, install a ground wire to the fuel changer, vehicle and fuel tank, and do not spray the surrounding area with water. Be careful when performing work in this area, as the work surface will become slippery. Do not clean up gasoline spills with water, as this may cause the gasoline to spread, and possibly create a fire hazard.

(3) Avoid using electric motors, working lights and other electric equipment that can cause sparks or high temperatures.

(4) Avoid using iron hammers as they may create sparks.

(5) Dispose of fuel-contaminated cloth separately using a fire resistant container.

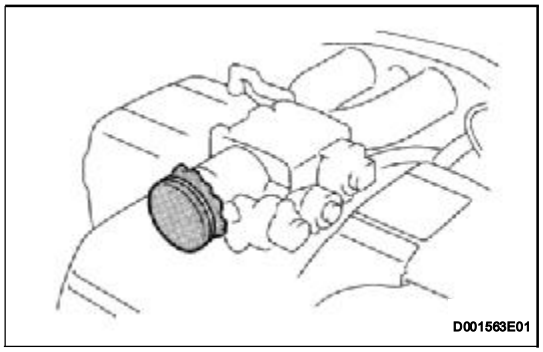

5. REMOVAL AND INSTALLATION OF ENGINE INTAKE PARTS

(a) If any metal particles enter inlet system parts, they may damage the engine.

(b) When removing and installing inlet system parts, cover the openings of the removed parts and engine openings. Use gummed tape or other suitable materials.

(c) When installing inlet system parts, check that no metal particles have entered the engine or the installed parts.

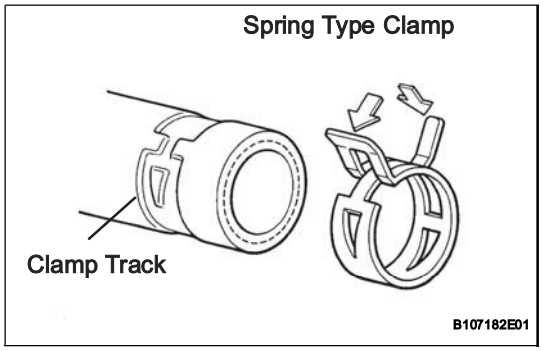

6. HANDLING OF HOSE CLAMPS

(a) Before removing the hose, check the clamp position so that it can be reinstalled in the same position.

(b) Replace any deformed or dented clamps with new ones.

(c) When reusing a hose, attach the clamp on the clamp track portion of the hose.

(d) For a spring type clamp, you may want to spread the tabs slightly after installation by pushing in the direction of the arrows as shown in the illustration.

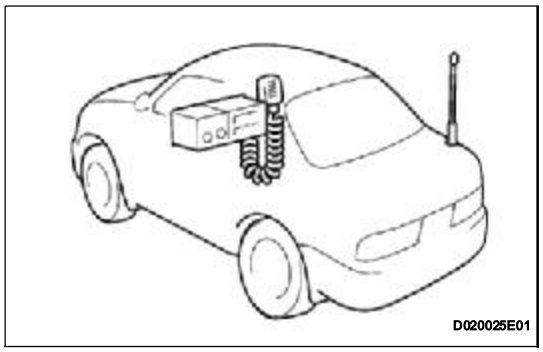

7. FOR VEHICLES EQUIPPED WITH MOBILE COMMUNICATION SYSTEMS

(a) Install the antenna as far away from the ECU and sensors of the vehicle electronic systems as possible.

(b) Install an antenna feeder at least 20 cm (7.87 in.) away from the ECU and sensors of the vehicle electronic systems. For details about ECU and sensor locations, refer to the section of the applicable components.

IN

(c) Keep the antenna and feeder separate from other wiring as much as possible. This will prevent signals from the communication equipment from affecting vehicle equipment and vice versa.
(d) Check that the antenna and feeder are correctly adjusted.
(e) Do not install a high-powered mobile communication system.

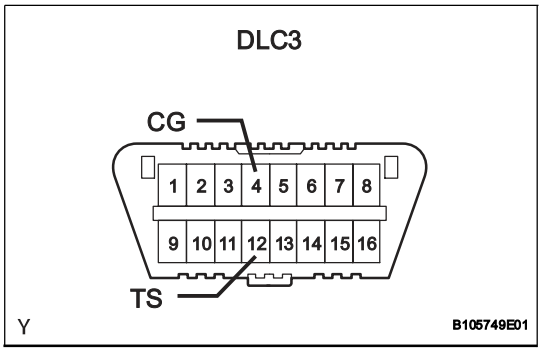

8. FOR VEHICLES EQUIPPED WITH TRACTION CONTROL (TRAC) SYSTEM

When testing with a 2-wheel drum tester such as a speedometer tester, a combination tester of the speedometer and brake, a chassis dynamometer, or when jacking up the front wheels and driving the wheels, always turn the TRAC system OFF.

(a) Confirm that the TRAC system is OFF.
  (1) Ignition switch to OFF.
  (2) Connect SST to terminals TS and CG of DLC3.
  NOTICE:
  Confirm that the VSC/TRAC warning light blinks.
(b) Begin testing.
(c) Disconnect SST from DLC3.

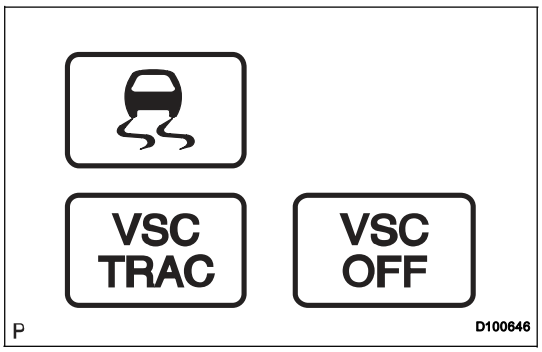

(d) Check that the VSC/TRAC warning light turns OFF.
  HINT:
  The SLIP indicator light blinks when the TRAC system is operating.

9. FOR VEHICLES EQUIPPED WITH VEHICLE STABILITY CONTROL (VSC) SYSTEM

(a) NOTICES WHEN USING DRUM TESTER
  (1) Before beginning testing, to disable the VSC, turn the ignition switch OFF and connect SST to terminals TS and CG of the DLC3.
  SST 09843-18040
  NOTICE:
  - **Confirm that the VSC warning light blinks.**
  - **VSC system will be reset when the engine is restarted.**
  - **For safety, secure the vehicle with restraint chains while using a wheel dynamometer.**
(b) NOTICES OF RELATED OPERATIONS TO VSC
  (1) Do not carry out unnecessary installation and removal as it might affect the adjustment of VSC related parts.
  (2) Be sure to follow the instructions for work preparation and final confirmation of proper operation of the VSC system.

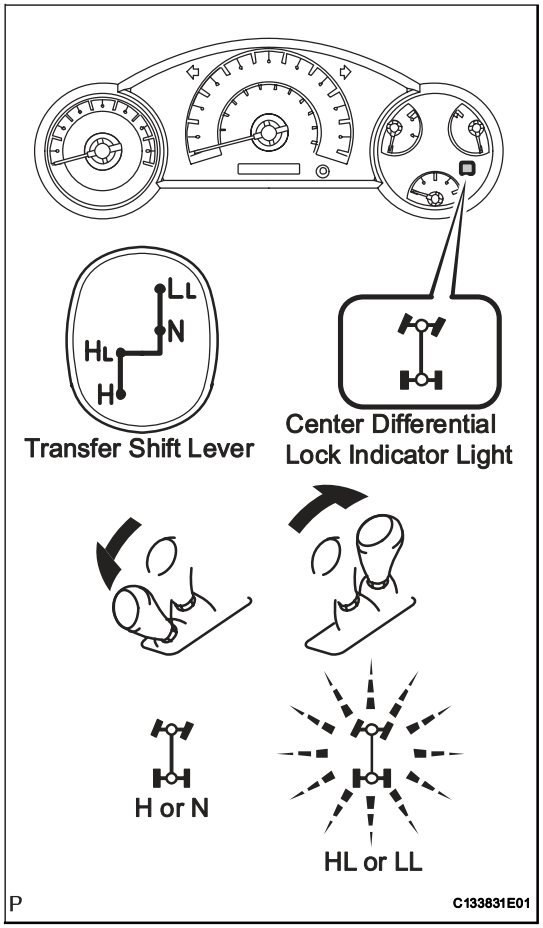

10. WHEN SERVICING FULL-TIME 4WD VEHICLES

The Full-time 4WD FJ CRUISER is equipped with a mechanical lock type center differential system. During tests using a brake tester or chassis dynamometer, such as braking force tests or speedometer tests, if only the front or rear wheels are to be rotated, it is necessary to set the position of the center differential to FREE or LOCK depending on the type of test being performed.

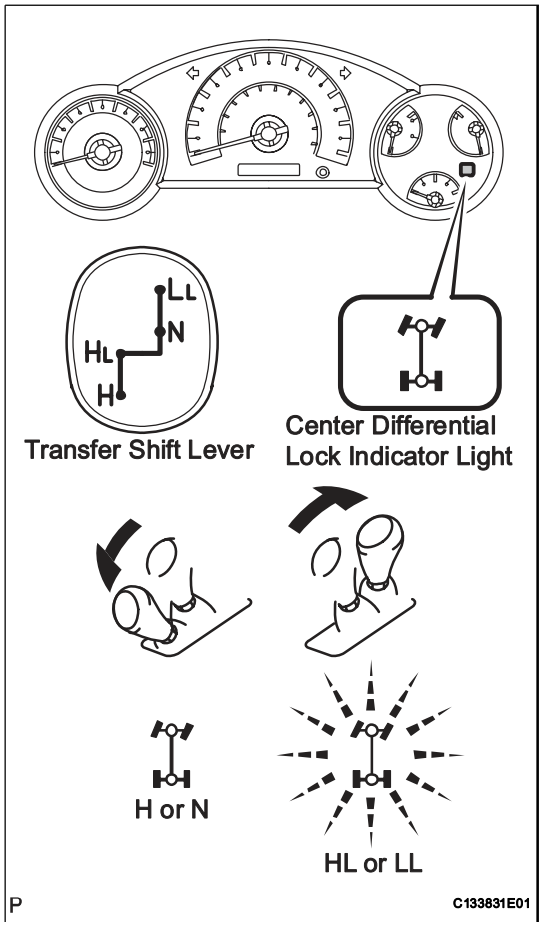

11. WHEN TESTING BRAKES, SPEEDOMETER, ETC.

(a) When carrying out any kind of servicing or testing on a Full-time 4WD in which the front or rear wheels are to be rotated (braking test, speedometer test), be sure to observe the precautions given below. Incorrect preparations or test procedures may cause danger as well as unsuccessful test results. Before starting any such servicing or test, be sure to check the following items:

- Center differential mode position (FREE or LOCK)

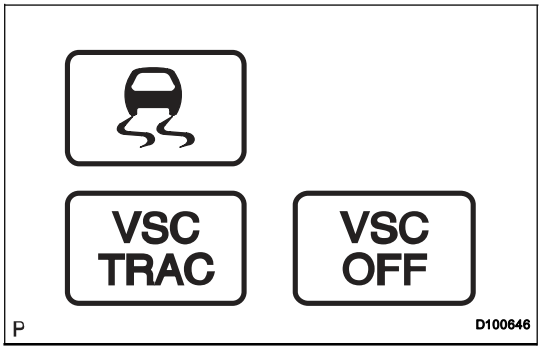

- Vehicle Stability Control (VSC) system:
  If the vehicle is equipped with the system, the slip indicator light, the VSC / TRAC indicator light and the VSC OFF indicator light come on with the ignition switch turned to ON. They will go off after about a few seconds.
- Whether wheels should be touching ground or jacked up
- Transmission gear position (N position)
- Transfer gear position (H or L position)
- Maximum testing vehicle speed
- Maximum testing time

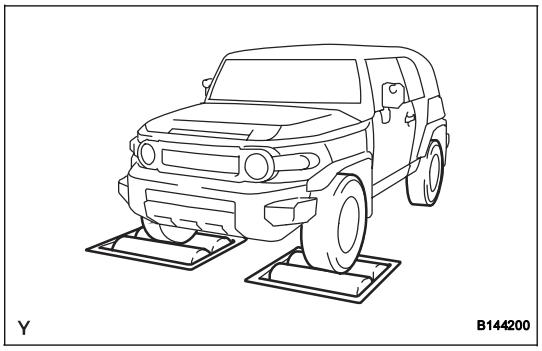

(b) Using Braking Tester:
Measure by low-speed type (Vehicle Speed: Below 0.5 km/h or 0.3 mph) brake tester and observe the following instructions before performing the test.
(1) Position the wheels to be tested (front or rear) on the tester.
(2) Put the center differential in the FREE position.
(3) If the vehicle is equipped with a Vehicle Stability Control (VSC) system, prohibit the system from activating (see previous step).
(4) Shift the transmission shift lever to the "N" position.
HINT:
Do not forget to change the Vehicle Stability Control (VSC) & Traction Control (TRAC) system to an operational condition after the test. Check that the VSC warning indicator light goes off when restarting the engine.

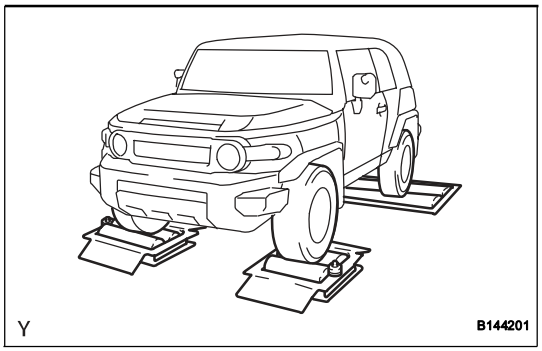

(c) Using Speedometer Tester:
Observe the following instructions and then test with the rear wheels.
(1) Position the rear wheels on the tester roller.
(2) Position the front wheels on the free roller or jack them up.
(3) Put the center differential in the FREE position.
(4) Deactivate the Vehicle Stability Control (VSC) & Traction Control (TRAC) system.
(5) Ensure that the vehicle does not move using chains.
HINT:
- Sudden shifting, braking, acceleration or deceleration is not allowed.
- Do not forget to change the Vehicle Stability Control (VSC) & Traction Control (TRAC) system to an operational condition after the test. Check that the VSC warning indicator light goes off when restarting the engine.

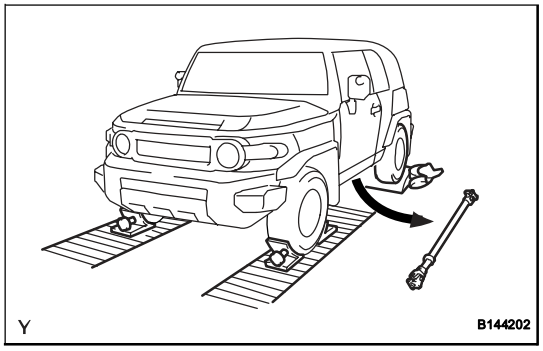

(d) Using Chassis Dynamometer:
Observe the following instructions and then measure with the rear wheels.
(1) Remove the front propeller shaft.
(2) Put the center differential in the LOCK position.
(3) Deactivate the Vehicle Stability Control (VSC) & Traction Control (TRAC) system.
(4) Ensure that the vehicle is securely fixed in place.
HINT:
- Sudden shifting, braking, acceleration or deceleration is not allowed.
- Do not forget to change the Vehicle Stability Control (VSC) & Traction Control (TRAC) system to an operational condition after the test. Check that the VSC warning indicator light goes off when restarting the engine.

(e) On-Vehicle Wheel Balancing:
When doing on-vehicle wheel balancing on a full-time 4WD vehicle, to prevent each wheel from being rotated at a different speed and in different directions (which could damage the center differential), always be sure to observe the following precautions.
(1) All 4 wheels should be jacked up, lifted off of the ground completely.
(2) Put the center differential in the LOCK position.
(3) Deactivate the Vehicle Stability Control (VSC) & Traction Control (TRAC) system.
(4) The parking brake lever should be fully released.
(5) None of the brakes should be applied.
(6) The wheels should be driven on the wheel balancer with the engine running.
(7) Carry out the wheel balancing with the transmission in the D position.
HINT:
- When doing the wheel balancing, pay attention to the other wheels rotating at the same time.
- Sudden acceleration, deceleration or braking is not allowed.
- Do not forget to change the Vehicle Stability Control (VSC) & Traction Control (TRAC) system to an operational condition after the test. Check that the VSC warning indicator light goes off when restarting the engine.

12. WHEN TOWING FULL-TIME 4WD VEHICLES
- Use one of the methods shown below to tow the vehicle.
- If the vehicle has trouble in the chassis and drive train, use method 1 (flat bed truck).

IN

IN

Towing Method	Parking Brake Condition	Transmission Shift Lever Position
1. Flat Bed Truck 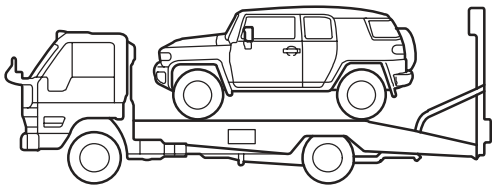 Y	Applied	Any Position
2. Wheel Lift Type Truck From Front 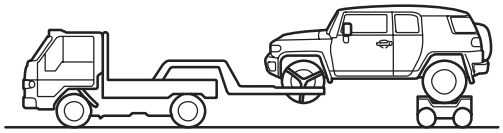 Y From Rear 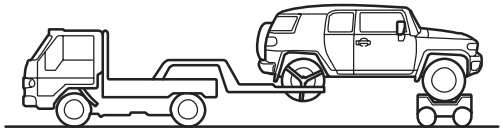 Y	Applied	

NOTICE:
Do not use any towing method other than those shown above.

- For example, the towing methods shown below are dangerous or may damage the vehicle, so do not use them.

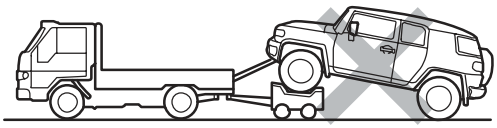 Y	• Never tow the vehicle using a method where the lifted-up wheel cannot rotate. • If this towing method is used, either from the front or rear: (a) There is a danger of the drive train heating up and causing breakdown, or of the wheels flying off the dolly. (b) In addition, if the vehicle is equipped with a Vehicle Stability Control (VSC) & Traction Control (TRAC) system, the system will apply the rotating wheels brake unless the engine isn't shut off.

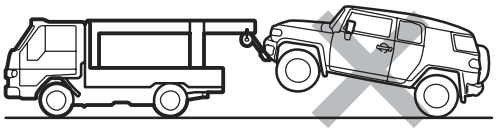 Y	Do not use the sling type method, either from the front or rear, as this method causes damage to the body.

13. FOR VEHICLES EQUIPPED WITH CATALYTIC CONVERTER

CAUTION:

If a large amount of unburned gasoline or gasoline vapors flow into the converter, it may cause overheating and create a fire hazard. To prevent this, observe the following precautions.

(a) Use only unleaded gasoline.

(b) Avoid idling the engine for more than 20 minutes.

(c) Avoid performing unnecessary spark jump tests.

(1) Perform a spark jump test only when absolutely necessary. Perform this test as rapidly as possible.

(2) While testing, never race the engine.

(d) Avoid a prolonged engine compression measurement. Engine compression measurements must be performed as rapidly as possible.

(e) Do not run the engine when the fuel tank is nearly empty. This may cause the engine to misfire and create an extra load on the converter.

IN

VEHICLE LIFT AND SUPPORT LOCATIONS

1. **NOTICE ABOUT VEHICLE CONDITION WHEN JACKING UP VEHICLE**
   (a) The vehicle must be unloaded before jacking up / lifting up the vehicle. Never jack up / lift up a heavily loaded vehicle.
   (b) When removing heavy parts such as the engine and transmission, the center of gravity of the vehicle may shift. To stabilize the vehicle, place a balance weight in a location where it will not roll or shift, or use a mission jack to hold the jacking support.
2. **NOTICE FOR USING 4 POST LIFT**
   (a) Follow the safety procedures outlined in the lift instruction manual.
   (b) Use precautionary measures to prevent the free wheel beam from damaging tires or wheels.
   (c) Use wheel chocks to secure the vehicle.
3. **NOTICE FOR USING JACK AND SAFETY STAND**
   (a) Work on a level surface. Use wheel chocks at all times.
   (b) Set the jack and rigid racks to the specified locations of the vehicle accurately.
   (c) When jacking up the vehicle, first release the parking brake and move the shift lever to N.
   (d) When jacking up the entire vehicle:
      (1) When jacking up the front wheels first, make sure wheel chocks are behind the rear wheels.
      (2) When jacking up the rear wheels first, make sure wheel chocks are in front of the front wheels.
   (e) When jacking up only the front or rear wheels of the vehicle:
      (1) Before jacking up the front wheels, place wheel chocks on both sides of the rear wheels.
      (2) Before jacking up the rear wheels, place wheel chocks on both sides of the front wheels.
   (f) When lowering a vehicle that only has its front or rear wheels jacked up:
      (1) Before lowering the front wheels, make sure wheel chocks are in front of the rear wheels.
      (2) Before lowering the rear wheels, make sure wheel chocks are behind the front wheels.

(g) It is extremely dangerous to perform any work on a vehicle raised on a jack alone, even for work that can be finished quickly. Rigid racks must be used to support the vehicle.

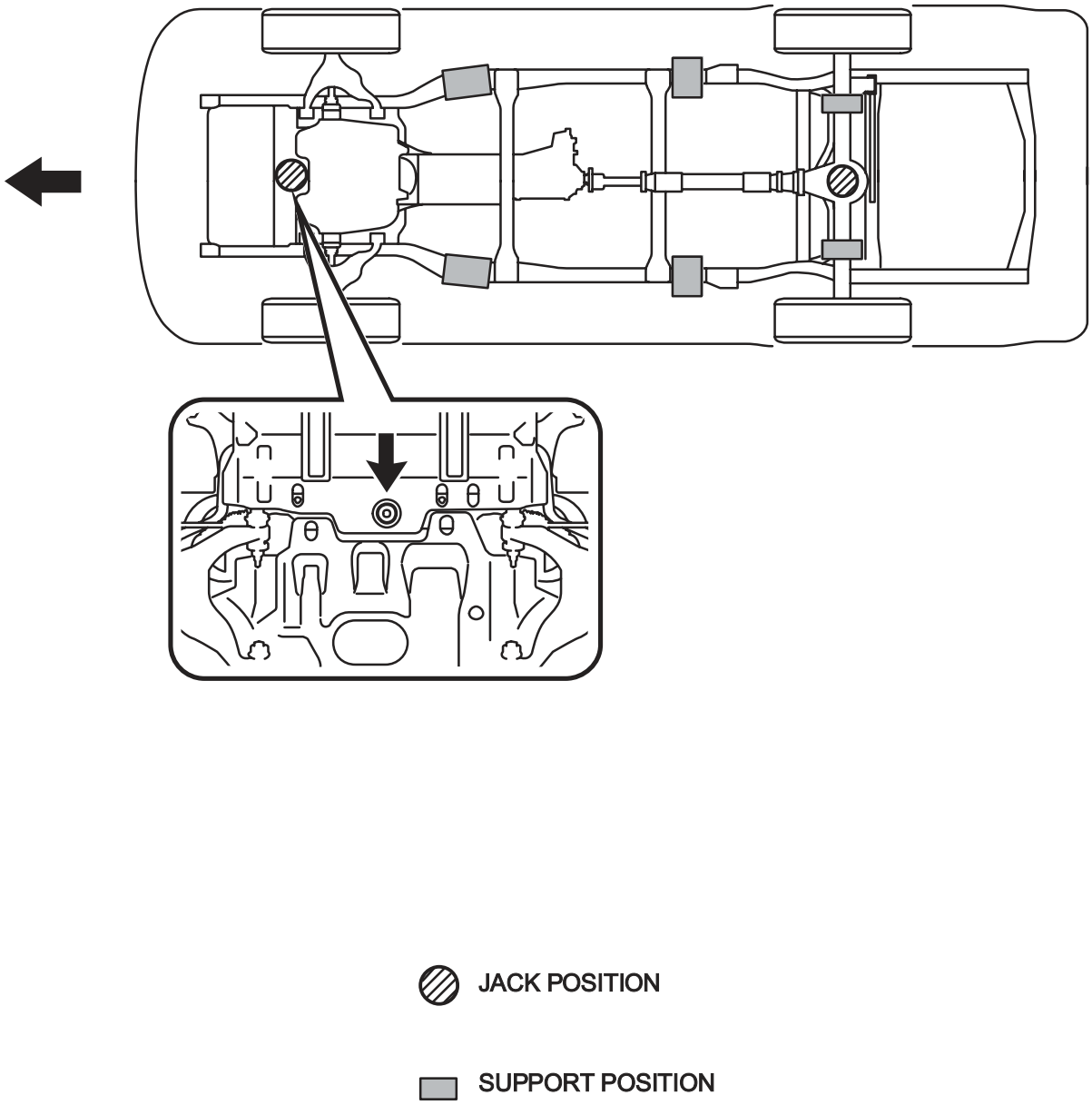

Y

B144209E01

IN

4. NOTICE FOR USING SWING ARM TYPE LIFT

(a) Follow safety procedures outlined in its instruction manual.

(b) Use a swing arm equipped with a rubber attachment.

(c) Set in the vehicle so as to make its center of gravity as close as possible to the center of the lift. (L becomes short.)

(d) Place the vehicle horizontally by adjusting the height of the cradle, and match the groove of the cradle and the safety stand support location accurately.

(e) Be sure to lock the swing arms before lifting and during work (if equipped with arm locks).

(f) Lift the vehicle up off the ground. Stand at a safe distance and shake the vehicle to check its stability.

Swing Arm Type Lift:

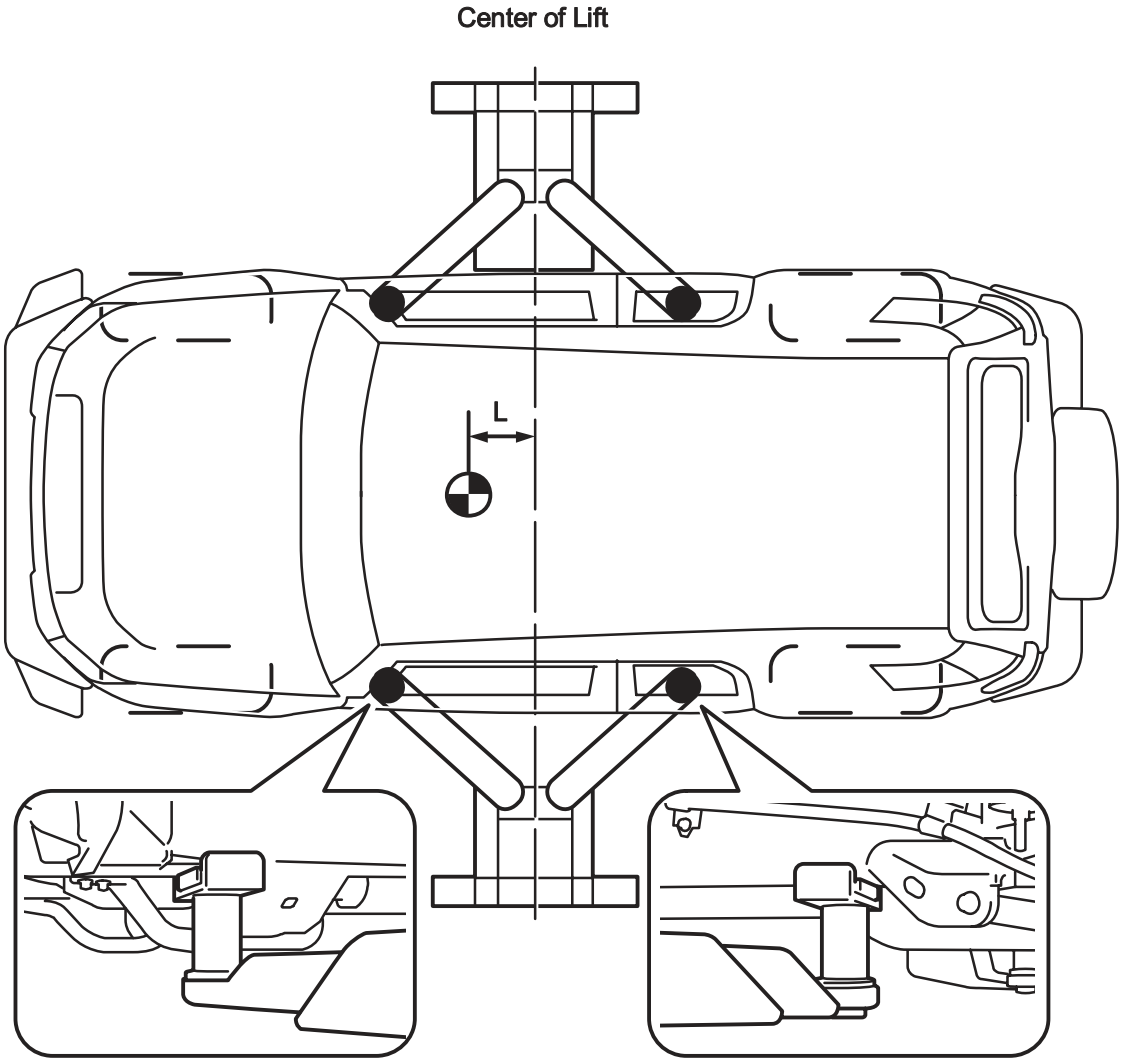

Y

B144198E01

IN

IN

CUSTOMIZE PARAMETERS

HINT:
The following can be customized.

NOTICE:

- **When the customer requests a change in a function, first make sure that the function can be customized.**
- **Be sure to make a note of the current settings before customizing.**
- **When troubleshooting a function, first make sure that the function is set to the default setting.**

1. LIGHTING SYSTEM

Illuminated Entry

Display (Item)	Default	Contents	Setting
LIGHTING TIME (Lighting Time)	15 (second)	Changes illumination duration after door closure. (It will quickly fade out in case of turning the ignition switch ON)	7.5/ 15/ 30 (second)
/L ON / UNLOCK (Room light illuminates when door key unlocked.)	ON	Function to light up the room light, when unlocking with the door key cylinder. (Room light illuminated when interior light switch in DOOR position)	ON / OFF
I/L ON/ACC OFF (Room light illuminates when ignition switch turned off)	ON	Illuminates light when ignition switch turned on (ACC). (Room light illuminated when interior light switch in DOOR position)	ON / OFF

HINT:
Sensitivity adjustments are difficult to confirm. Check by driving the customer's vehicle.

2. POWER DOOR LOCK CONTROL SYSTEM

Power Door Lock Control System

Display (Item)	Default	Contents	Setting
UNLK/KEY TWICE	ON	Unlocks only driver side door when driver side door key cylinder turned to unlock once, and unlocks all doors when turned to unlock twice. For OFF setting, turning it once unlocks all doors.	ON / OFF

3. WIRELESS DOOR LOCK CONTROL SYSTEM

Wireless Door Lock Control System

Display (Item)	Default	Contents	Setting
HAZARD ANS BACK	ON	When wireless lock switch on transmitter pressed, illuminates all hazard warning lights once. When unlock switch pressed, all hazard warning lights illuminate twice	ON / OFF
WIRELESS OPER	ON	ON /OFF of wireless door lock function	ON / OFF
ALARM FUNCTION	ON	Operates security alarm when panic switch on transmitter continuously pressed for 1 second	ON / OFF

Display (Item)	Default	Contents	Setting
UNLOCK/2 OPER	ON	Function that unlocks driver side door when unlock switch on transmitter is pressed once, and unlocks all doors when pressed twice. If setting is OFF, pressing unlock switch once makes all doors unlock..	ON / OFF
AUTO LOCK DELAY	30 seconds	Time until relocking after unlocking with wireless door lock function	60 seconds / 30 seconds
OPEN DOOR WARN	ON	If a door is not completely closed and LOCK is pressed, this function sounds a buzzer for 10 seconds	ON / OFF
WIRELS BUZZ VOL	MID2	To adjust the volume of the wireless buzzer	OFF / MIN / MID1/ MID2 /MID3 / MAX

IN

INITIALIZATION

The initialization procedures are below the table.

System Name
Meter / Gauge System

1. **DESCRIPTION**

   NOTICE:

   Do not place magnetic or metal objects on or near the accessory meter.

   HINT:

   The procedures described below are for vehicles equipped with an accessory meter.

   (a) The location of magnetic north differs depending on the vehicle location. Adjustment of the compass' magnetism is required to correct possible compass deviations from true north.

   (b) Compass function calibration is necessary when: 1) purchasing a vehicle; 2) disconnecting and reconnecting the cable of the negative (-) battery terminal; 3) replacing the vehicle battery; 4) driving the vehicle outside the set zone (see the zone map below); or 5) placing magnetic or metal objects near the accessory meter (the direction indication on the display blinks).

2. **PERFORM CALIBRATION**

   CAUTION:

   - **Strictly observe posted speed limits, traffic laws and road conditions.**
   - **Make sure no people are near the vehicle.**

   NOTICE:

   - **Perform the circling calibration in a spacious area that does not have artificial magnetic influence. Calibration cannot be performed in underground parking lots, areas under steel towers and areas between tall buildings.**
   - **When performing the calibration, do not operate the air conditioner, power windows, or any other electrical system.**
   - **The compass may become magnetized during shipping by vessels or freight cars. Be sure to calibrate the compass by correctly performing the procedure described below. If the calibration cannot be completed despite the vehicle being driven in a circle several times, the vehicle's magnetic field may be interfering with the calibration. Demagnetize the vehicle using a demagnetizer and perform calibration again.**

Accessory Meter:

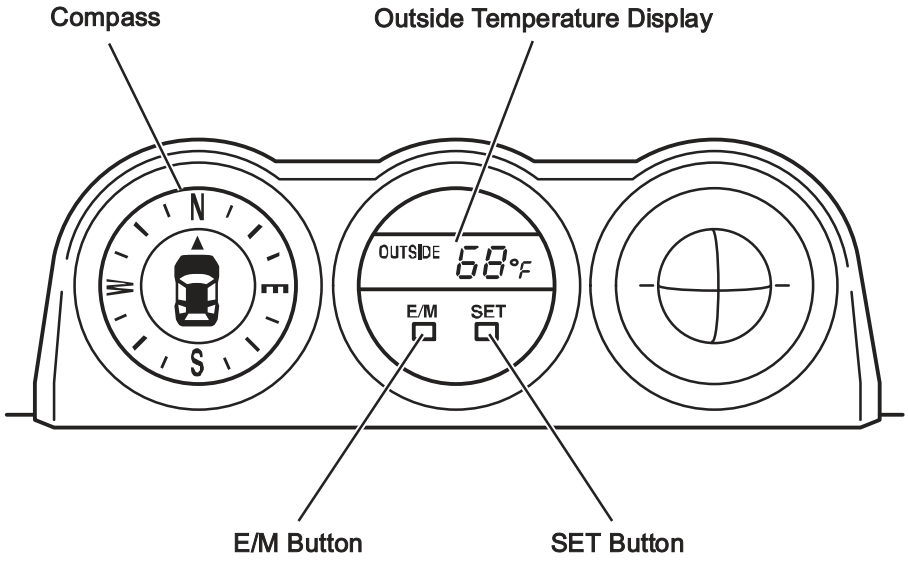

(a) DEVIATION CALIBRATION PROCEDURE:

(1) Turn the ignition switch ON.

HINT:

When the initial circling calibration has not yet been performed, the COMPASS indicator in the outside temperature display blinks.

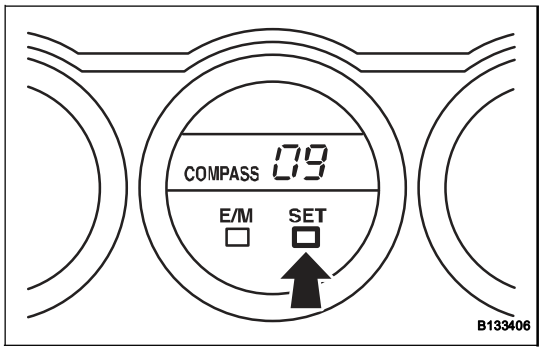

(2) Switch the mode to compass correction mode by pushing the SET button for about 2 seconds, until the zone number appears in the outside temperature display.

HINT:

If no button operations occur for more than 6 seconds while in compass correction mode, the calibration is cancelled and the display returns to the outside temperature indication. To restart, perform the procedure from the first step again.

IN

(3) Refer to the following map to determine the vehicle location and select the relevant zone number by pushing the E/M button.

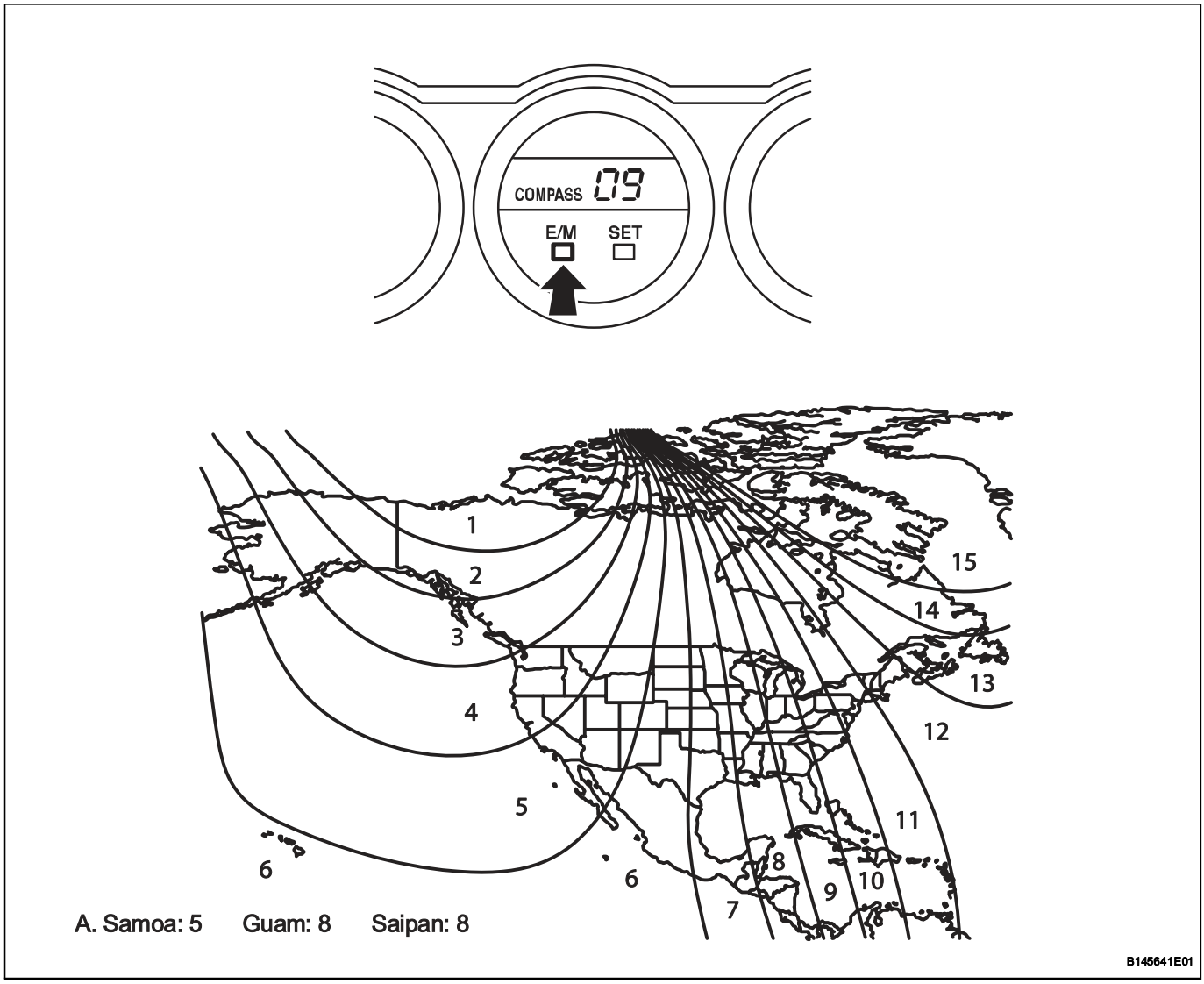

HINT:
After DEVIATION CALIBRATION, leave the system for 6 seconds or push and hold the SET button for about 2 seconds. The display returns to the outside temperature display.

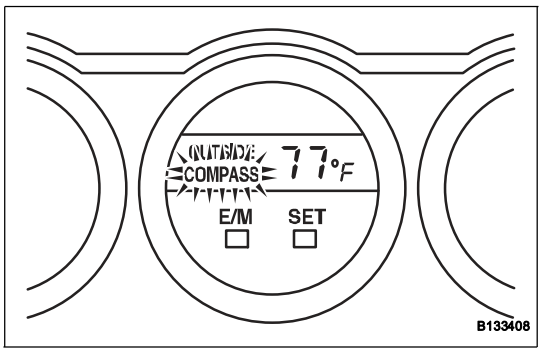

(b) CIRCLING CALIBRATION PROCEDURE:

(1) Start the engine.

HINT:
When the initial circling calibration has not yet been performed, the COMPASS indicator in the outside temperature display blinks.

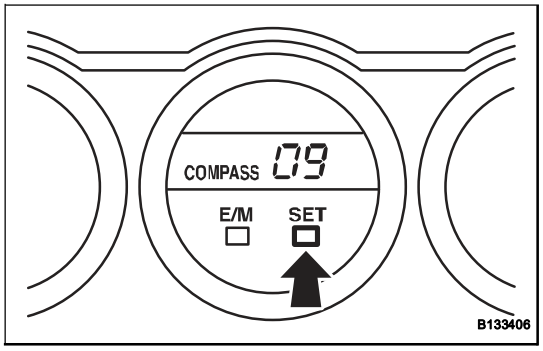

(2) Switch the mode to compass correction mode by pushing the SET button for about 2 seconds, until the zone number appears in the outside temperature display.
HINT:
If no button operations occur for more than 6 seconds while in compass correction mode, calibration is cancelled and the display returns to the outside temperature indication. To restart, perform the procedure from the first step again.

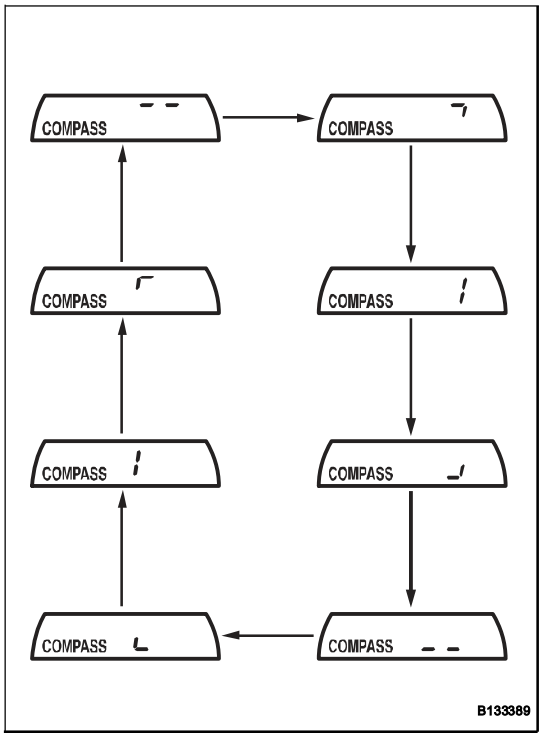

(3) Push the SET button again to change the mode to turn correction mode.
HINT:
While in correction mode, the indication bars move as shown in the illustration.

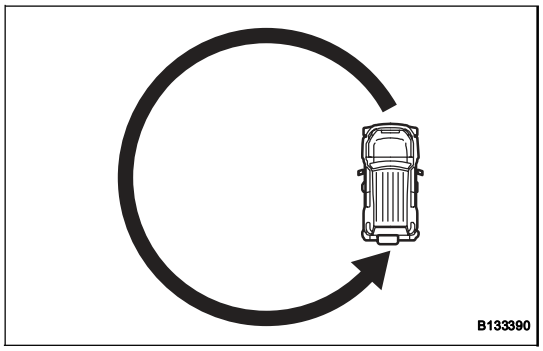

(4) If there is sufficient space to drive the vehicle in a circle, perform the following procedure:
1. Drive the vehicle in a full circle within 2 minutes, at a vehicle speed of 5 mph (8 km/h) or lower, as shown in the illustration.

NOTICE:
- **Do not perform the circling calibration of the compass in a place where the earth's magnetic field is subject to interference by artificial magnetic fields (underground parking, under a steel tower, between buildings, roof parking, near a crossing, near a large vehicle, etc.).**
- **During the calibration, do not operate any electric systems (power window, etc.) as they may interfere with the calibration.**

IN

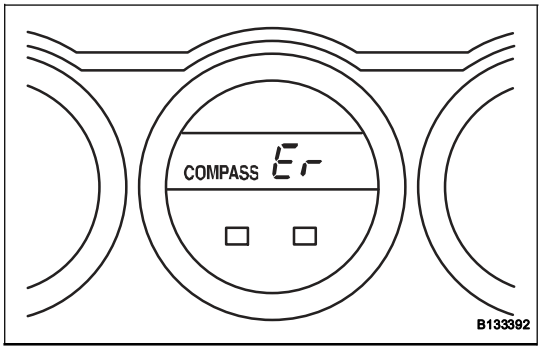

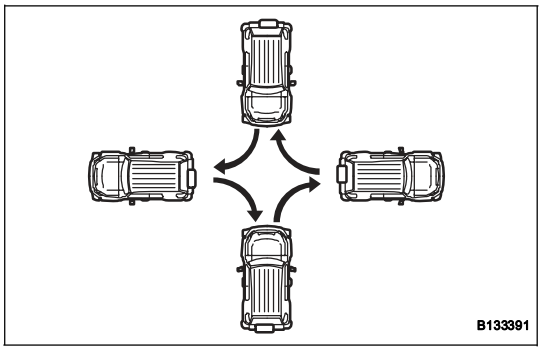

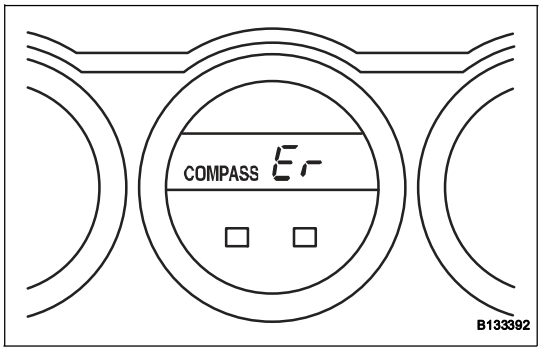

HINT:
- When the compass display returns to the outside temperature display, the calibration is complete.
- When the circling calibration fails, "Er" is displayed for about 2 seconds and then the COMPASS indicator flashes.
- If the correct direction is not displayed after driving the vehicle as specified, change the vehicle location.
- To cancel the calibration before completion, push the SET button for about 2 seconds.

(5) If enough space is not available to drive in a circle, perform the following:
1. Perform a four-point turn within 2 minutes, as shown in the illustration.

NOTICE:
- **Do not perform the circling calibration of the compass in a place where the earth's magnetic field is subject to interference by artificial magnetic fields (underground parking, under a steel tower, between buildings, roof parking, near a crossing, near a large vehicle, etc.).**
- **During the calibration, do not operate any electric systems (power window, etc.) as they may interfere with the calibration.**

HINT:
- When the compass display returns to the outside temperature display, the calibration is complete.
- When the circling calibration fails, "Er" is displayed for about 2 seconds and then the COMPASS indicator flashes.
- If the correct direction is not displayed after driving the vehicle as specified, change the vehicle location.
- To cancel the calibration before completion, push the SET button for about 2 seconds.

(6) Check that the COMPASS indicator is not blinking and that the compass is displayed normally.

IN

HOW TO TROUBLESHOOT ECU CONTROLLED SYSTEMS

GENERAL INFORMATION

A large number of ECU controlled systems are used in the FJ CRUISER. In general, ECU controlled systems are considered to be very intricate, requiring a high level of technical knowledge to troubleshoot. However, most problem checking procedures only involve inspecting the ECU controlled system's circuits one by one. An adequate understanding of the system and a basic knowledge of electricity is enough to perform effective troubleshooting, accurate diagnoses and necessary repairs.

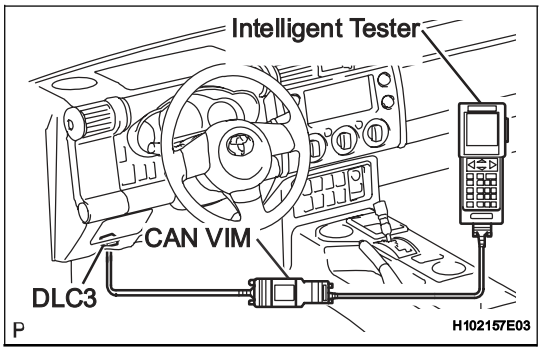

FOR USING INTELLIGENT TESTER

Connect the cable of the intelligent tester (with CAN VIM) to the DLC3, turn the ignition switch ON and attempt to use the tester. If the display indicates that a communication error has occurred, there is a problem either with the vehicle or with the tester.

* If communication is normal when the tester is connected to another vehicle, inspect the DLC3 of the original vehicle.
* If communication is still not possible when the tester is connected to another vehicle, the problem may be in the tester itself. Consult the Service Department listed in the tester's instruction manual.

HOW TO PROCEED WITH TROUBLESHOOTING

1. OPERATION FLOW

HINT:
Perform troubleshooting in accordance with the procedures below. The following is an outline of basic troubleshooting procedures. Confirm the troubleshooting procedures for the circuit you are working on before beginning troubleshooting.

IN

1	VEHICLE BROUGHT TO WORKSHOP

NEXT

2	CUSTOMER PROBLEM ANALYSIS

(a) Ask the customer about the conditions and environment when the problem occurred.

NEXT

3	INSPECT BATTERY VOLTAGE

Standard voltage:
11 to 14 V
If the voltage is below 11 V, recharge or replace the battery before proceeding.

NEXT

4	SYMPTOM CONFIRMATION AND DTC (AND FREEZE FRAME DATA) CHECK

(a) Visually check the wire harnesses, connectors and fuses for open and short circuits.
(b) Warm up the engine to the normal operating temperature.
(c) Confirm the problem symptoms and conditions, and check for DTCs.

Result

Result	Proceed to
DTC is output	A
DTC is not output	B

B → Go to step 6

A

IN

5	DTC CHART

(a) Check the results obtained in "SYMPTOM CONFIRMATION AND DTC (AND FREEZE FRAME DATA) CHECK". Then find the output DTC in the DTC chart. Look at the "Trouble Area" column for a list of potentially malfunctioning circuits and / or parts.

NEXT → **Go to step 7**

6	PROBLEM SYMPTOMS CHART

(a) Check the results obtained in "SYMPTOM CONFIRMATION AND DTC (AND FREEZE FRAME DATA) CHECK". Then find the problem symptoms in the problem symptoms table. Look at the "Suspected Area" column for a list of potentially malfunctioning circuits and / or parts.

NEXT

7	CIRCUIT INSPECTION OR PARTS INSPECTION

(a) Confirm the malfunctioning circuit or part.

NEXT

8	ADJUST, REPAIR OR REPLACE

(a) Adjust, repair or replace the malfunctioning circuit or parts.

NEXT

9	CONFIRMATION TEST

(a) After the adjustment, repairs or replacement, confirm that the malfunction no longer exists. If the malfunction does not reoccur, perform a confirmation test under the same conditions and in the same environment as when the malfunction occurred the first time.

NEXT

END

2. CUSTOMER PROBLEM ANALYSIS

HINT:

- In troubleshooting, confirm that the problem symptoms have been accurately identified. Preconceptions should be discarded in order to make an accurate judgment. To clearly understand what the problem symptoms are, it is extremely important to ask the customer about the problem and the conditions at the time the malfunction occurred.
- Gather as much information as possible for reference. Past problems that seem unrelated may also help in some cases.
- The following 5 items are important points in the problem analysis:

What	Vehicle model, system name
When	Date, time, occurrence frequency
Where	Road conditions
Under what conditions?	Running conditions, driving conditions, weather conditions
How did it happen?	Problem symptoms

3. SYMPTOM CONFIRMATION AND DIAGNOSTIC TROUBLE CODE

HINT:

The diagnostic system in the FJ CRUISER has various functions.

- The first function is the Diagnostic Trouble Code (DTC) check. A DTC is a code stored in the ECU memory whenever a malfunction in the signal circuits to the ECU occurs. In a DTC check, a previous malfunction's DTC can be checked by a technician during troubleshooting.
- Another function is the Input Signal Check, which checks if the signals from various switches are sent to the ECU correctly.
  By using these functions, the problem areas can be narrowed down and troubleshooting is more effective. Diagnostic functions are incorporated in the following system in the FJ CRUISER.

System	DTC Check (Normal Mode)	DTC Check (Check Mode)	Freeze-frame Data	Sensor Check / Test Mode (Input Signal Check)	Data List	Active Test	Customize Parameter
1GR-FE SFI SYSTEM	○	○	○	-	○	○	-
A750E AUTOMATIC TRANSAXLE SYSTEM	○	○	-	-	○	○	-
A750F AUTOMATIC TRANSAXLE SYSTEM	○	○	-	-	○	○	-
VEHICLE STABILITY CONTROL SYSTEM	○	-	○	○	○	○	-
AIRBAG SYSTEM	○	○	-	-	○	-	-

System	DTC Check (Normal Mode)	DTC Check (Check Mode)	Freeze-frame Data	Sensor Check / Test Mode (Input Signal Check)	Data List	Active Test	Customize Parameter
OCCUPANT CLASSIFICATION SYSTEM	○	-	-	-	○	-	-
CRUISE CONTROL SYSTEM	○	-	-	-	○	-	-
MULTIPLEX COMMUNICATION	○	-	-	-	-	-	-
CAN COMMUNICATION SYSTEM	○	-	-	-	-	-	-

- In the DTC check, it is very important to determine whether the problem indicated by the DTC is either: 1) still occurring, or 2) occurred in the past but has since returned to normal. In addition, the DTC should be compared to the problem symptom to see if they are related. For this reason, DTCs should be checked before and after confirmation of symptoms (i.e., whether or not problem symptoms exist) to determine current system conditions, as shown in the flowchart below.
- Never skip the DTC check. Failing to check DTCs may, depending on the case, result in unnecessary troubleshooting for systems operating normally or lead to repairs not related to the problem. Follow the procedures listed in the flowchart in the correct order.
- The following flowchart shows how to proceed with troubleshooting using the DTC check. Directions from the flowchart will indicate how to proceed either to DTC troubleshooting or to the troubleshooting of each problem symptom.

1 DTC CHECK

NEXT

2 MAKE A NOTE OF DTCS DISPLAYED AND THEN CLEAR MEMORY

NEXT

3 SYMPTOM CONFIRMATION

Result

Result	Proceed to
No symptoms exist	A
Symptoms exist	B

B → Go to step 5

A

4	SIMULATION TEST USING SYMPTOM SIMULATION METHODS

IN

NEXT

5	DTC CHECK

Result

Result	Proceed to
DTC is not output	A
DTC is output	B

B → TROUBLESHOOTING OF PROBLEM INDICATED BY DTC

A

6	SYMPTOM CONFIRMATION

Result

Result	Proceed to
Symptoms exist	A
No symptoms exist	B

If a DTC was displayed in the initial DTC check, the problem may have occurred in a wire harness or connector in that circuit in the past. Check the wire harness and connectors.

B → SYSTEM NORMAL

A

TROUBLESHOOTING OF EACH PROBLEM SYMPTOM

The problem is still occurring in a place other than the diagnostic circuit (the DTC displayed first is either for a past problem or a secondary problem).

4. **SYMPTOM SIMULATION**

   HINT:

   The most difficult case in troubleshooting is when no problem symptoms occur. In such a case, a thorough problem analysis must be carried out. A simulation of the same or similar conditions and environment in which the problem occurred in the customer's vehicle should be carried out. No matter how much skill or experience a technician has, troubleshooting without confirming the problem symptoms will lead to important repairs being overlooked and mistakes or delays

IN

For example:

With a problem that only occurs when the engine is cold or as a result of vibration caused by the road during driving, the problem can never be determined if the symptoms are being checked on a stationary vehicle or on a vehicle with a warmed-up engine. Vibration, heat or water penetration (moisture) is difficult to reproduce. The symptom simulation tests below are effective substitutes for the conditions and can be applied on a stationary vehicle. Important points in the symptom simulation test:

In the symptom simulation test, the problem symptoms as well as the problem area or parts must be confirmed. First, narrow down the possible problem circuits according to the symptoms. Then, connect the tester and carry out the symptom simulation test, judging whether the circuit being tested is defective or normal. Also, confirm the problem symptoms at the same time. Refer to the problem symptoms table for each system to narrow down the possible causes.

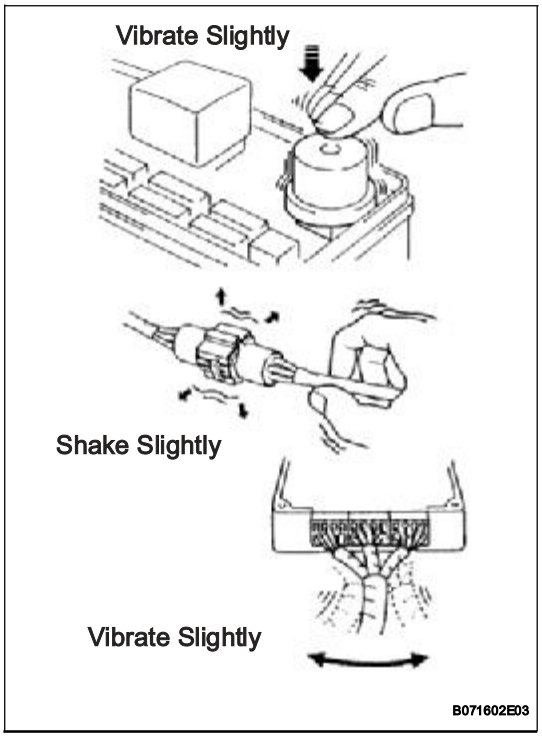

(a) VIBRATION METHOD:
When a malfunction seems to occur as a result of vibration.
(1) PART AND SENSOR
Apply slight vibration with a finger to the part of the sensor suspected to be the cause of the problem, and check whether or not the malfunction occurs.
NOTICE:
Applying strong vibration to relays may open them.
(2) CONNECTORS
Slightly shake the connector vertically and horizontally.
(3) WIRE HARNESS
Slightly shake the wire harness vertically and horizontally.
HINT:
The connector joint and fulcrum of the vibration are the major areas that should be checked thoroughly.

(b) HEAT METHOD:
When a malfunction seems to occur when the area in question is heated.
(1) Heat the component that is the possible cause of the malfunction with a hair dryer or similar device. Check if the malfunction occurs.
NOTICE:
- **Do not heat to more than 60°C (140°F). Exceeding this temperature may damage components.**

- **Do not apply heat directly to the parts in the ECU.**

(c) WATER SPRINKLING METHOD:
When a malfunction seems to occur on a rainy day or in high-humidity.
(1) Sprinkle water onto the vehicle and check if the malfunction occurs.
NOTICE:
- **Never sprinkle water directly into the engine compartment. Indirectly change the temperature and humidity by spraying water onto the front of the radiator.**
- **Never apply water directly onto the electronic components.**

HINT:
If the vehicle has or had a water leakage problem, the leakage may have damaged the ECU or connections. Look for evidence of corrosion or short circuits. Proceed with caution during water tests.

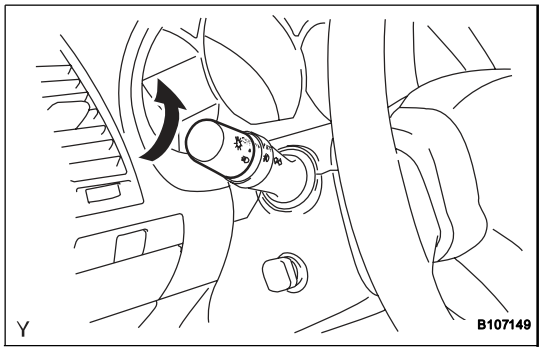

(d) HIGH ELECTRICAL LOAD METHOD:
When a malfunction seems to occur when electrical load is excessive.
(1) Turn on the heater blower, headlight, rear window defogger and all other electrical loads. Check if the malfunction reoccurs.

5. DIAGNOSTIC TROUBLE CODE CHART

Look for output Diagnostic Trouble Codes (DTCs) (from the DTC checks) in the appropriate section's Diagnostic Trouble Code Chart. Use the chart to determine the trouble area and the proper inspection procedure. A description of each of the chart's columns are below.

Item	Description
DTC No.	Indicates the diagnostic trouble code
Detection Item	Indicates the system or details of the problem
Trouble Area	Indicates the suspect areas of the problem
See Page	Indicates the page where the inspection procedures for each circuit is to be found, or gives instruction for checking and repairs.

6. PROBLEM SYMPTOMS TABLE

When a "Normal" code is output during a DTC check but the problem is still occurring, use the Problem Symptoms Table. The suspected areas (circuits or parts) for each problem symptom are in the table. The suspected areas are listed in order of probability. A description of each of the chart's columns are below.

HINT:
In some cases, the problem is not detected by the diagnostic system even though a problem symptom is present. It is possible that the problem is occurring outside the detection range of the diagnostic system, or that the problem is occurring in a completely different system.

Item	Description
Problem Symptom	-
Circuit Inspection, Inspection Order	Indicates the order in which the circuits need to be checked
Circuit or Part Name	Indicates the circuit or part which needs to be checked
See Page	Indicates the page where the flowchart for each circuit is located

7. CIRCUIT INSPECTION

A description of the main areas of each circuit inspection is below.

Item	Description
Circuit Description	The major role, operation of the circuit and its component parts are explained.
Diagnostic Trouble Code No. and Detection Item	Indicates the diagnostic trouble codes, diagnostic trouble code settings and suspected areas for a problem
Wiring Diagram	This shows a wiring diagram of the circuit. Use this diagram together with ELECTRICAL WIRING DIAGRAM to thoroughly understand the circuit. Wire colors are indicated by an alphabetical code: • B = Black • L = Blue • R = Red • BR = Brown • LG = Light Green • V = Violet • G = Green • O = Orange • W = White • GR = Gray • P = Pink • Y = Yellow • SB = Sky Blue The first letter indicates the basic wire color and the second letter indicates the color of the stripe.
Inspection Procedures	Use the inspection procedures to determine if the circuit is normal or abnormal. If abnormal, use the inspection procedures to determine whether the problem is located in the sensors, actuators, wire harnesses or ECU.
Indicates the condition of the connector of the ECU during the check	Connector being checked is connected. Connections of tester are indicated by (+) or (-) after the terminal name. Connector being checked is disconnected. For illustrations of inspections between a connector and body ground, information about the body ground is not shown in the illustration.

ELECTRONIC CIRCUIT INSPECTION PROCEDURE

1. BASIC INSPECTION

(a) WHEN MEASURING RESISTANCE OF ELECTRONIC PARTS

(1) Unless otherwise stated, all resistance measurements should be made at an ambient temperature of 20°C (68°F). Resistance measurements may be inaccurate if measured at high temperatures, i.e. immediately after the vehicle has been running. Measurements should be made after the engine has cooled down.

(b) HANDLING CONNECTORS

(1) When disconnecting a connector, first squeeze the mating halves tightly together to release the lock, and then press the lock claw and separate the connector.

(2) When disconnecting a connector, do not pull on the harnesses. Grasp the connector directly and separate it.

(3) Before connecting a connector, check that there are no deformed, damaged, loose or missing terminals.

(4) When connecting a connector, press firmly until it locks with a "click" sound.

(5) If checking a connector with a TOYOTA electrical tester, check the connector from the backside (harness side) using a mini test lead.

NOTICE:

- **As a waterproof connector cannot be checked from the backside, check it by connecting a sub-harness.**
- **Do not damage the terminals by moving the inserted tester needle.**

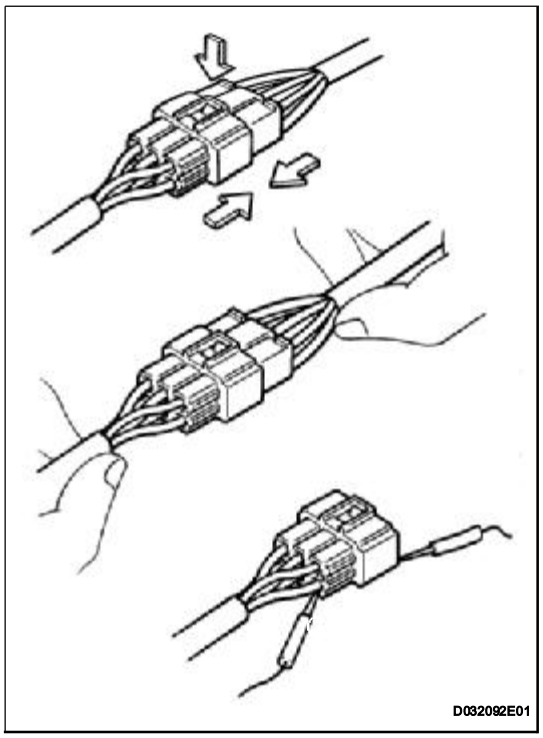

(c) CHECKING CONNECTORS

(1) Checking when a connector is disconnected: Squeeze the connector together to confirm that they are fully connected and locked.

(2) Checking when a connector is disconnected: Check by pulling the wire harness lightly from the backside of the connector. Look for unlatched terminals, missing terminals, loose crimps or broken conductor wires. Check visually for corrosion, metallic or foreign matter and water, and bent, rusted, overheated, contaminated, or deformed terminals.

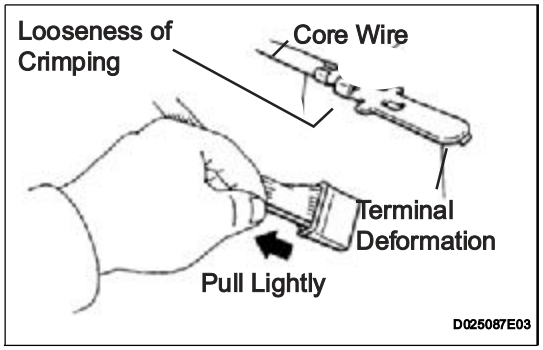

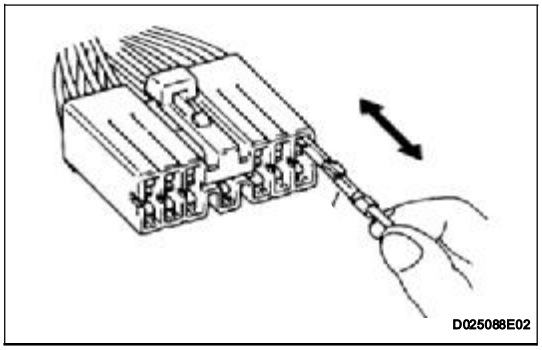

(3) Checking the contact pressure of the terminal: Prepare a spare male terminal. Insert it into a female terminal, and check for ample tension when inserting and after full engagement.
NOTICE:
When testing a gold-plated female terminal, always use a gold-plated male terminal.

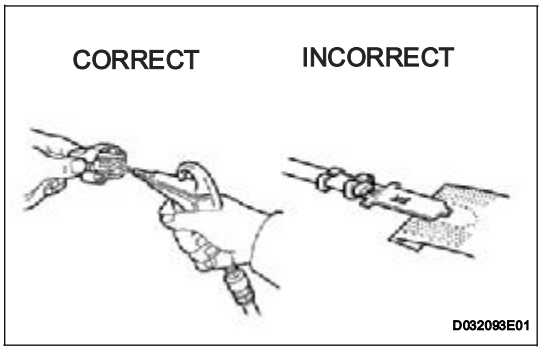

(d) REPAIR METHOD OF CONNECTOR TERMINAL
(1) If there is any foreign matter on the terminal, clean the contact point using an air gun or cloth. Never rub the contact point using sandpaper as the plating may come off.
(2) If there is abnormal contact pressure, replace the female terminal. If the male terminal is gold-plated (gold color), use a gold-plated female terminal; if it is silver-plated (silver color), use a silver-plated female terminal.
(3) Damaged, deformed, or corroded terminals should be replaced. If the terminal does not lock into the housing, the housing may have to be replaced.

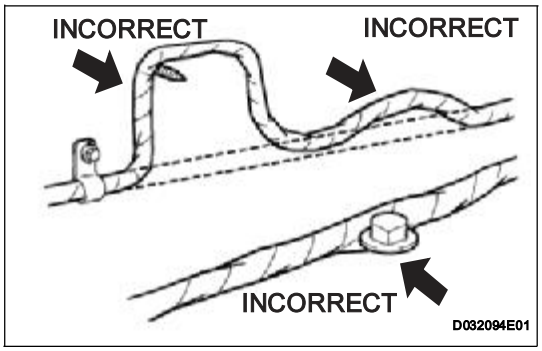

(e) HANDLING OF WIRE HARNESS
(1) If removing a wire harness, check the wiring and clamping before proceeding so that it can be restored in the same way.
(2) Never twist, pull or slacken the wire harness more than necessary.
(3) The wire harness should never come into contact with a high temperature part, or rotating, moving, vibrating or sharp-edged parts. Avoid contact with panel edges, screw tips and other sharp items.
(4) When installing parts, never pinch the wire harness.
(5) Never cut or break the cover of the wire harness. If it is cut or broken, replace it or repair it with vinyl tape.

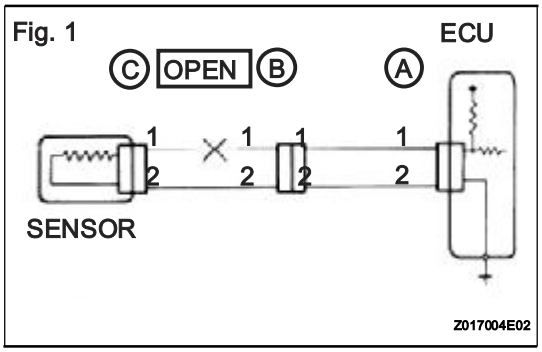

2. CHECK FOR OPEN CIRCUIT
(a) For an open circuit in the wire harness in Fig. 1, check the resistance or voltage, as described below.

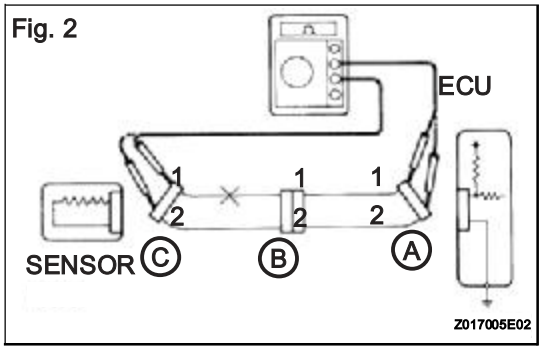

(b) Check the resistance.

(1) Disconnect connectors A and C and measure the resistance between them.

Standard resistance (Fig. 2)

Tester Connection	Specified Condition
Connector A terminal 1 - Connector C terminal 1	10 kΩ or higher
Connector A terminal 2 - Connector C terminal 2	Below 1Ω

HINT:
Measure the resistance while lightly shaking the wire harness vertically and horizontally. If the results match the examples above, an open circuit exists between terminal 1 of connector A and terminal 1 of connector C.

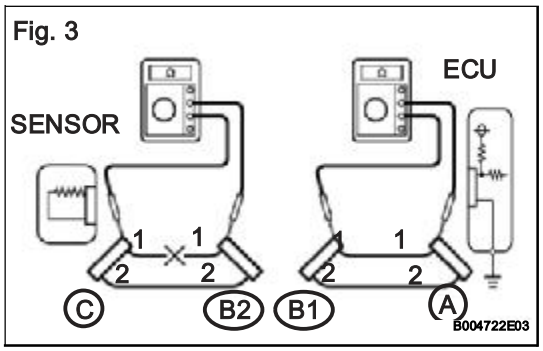

(2) Disconnect connector B and measure the resistance between the connectors.

Standard resistance (Fig. 3)

Tester Connection	Specified Condition
Connector A terminal 1 - Connector B1 terminal 1	Below 1 Ω
Connector B2 terminal 1 - Connector C terminal 1	10 kΩ or higher

If the results match the examples above, an open circuit exists between terminal 1 of connector B2 and terminal 1 of connector C.

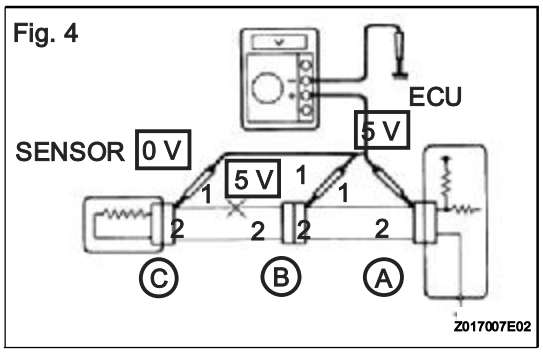

(c) Check the voltage.

(1) In a circuit in which voltage is applied to the ECU connector terminal, an open circuit can be checked by conducting a voltage check.
With each connector still connected, measure the voltage between the body ground and these terminals (in this order): 1) terminal 1 of connector A, 2) terminal 1 of connector B, and 3) terminal 1 of connector C.

Standard voltage (Fig. 4)

Tester Connection	Specified Condition
Connector A terminal 1 - Body ground	5 V
Connector B terminal 1 - Body ground	5 V
Connector C terminal 1 - Body ground	Below 1 V

If the results match the examples above, an open circuit exists in the wire harness between terminal 1 of connector B and terminal 1 of connector C.

IN

Fig. 5

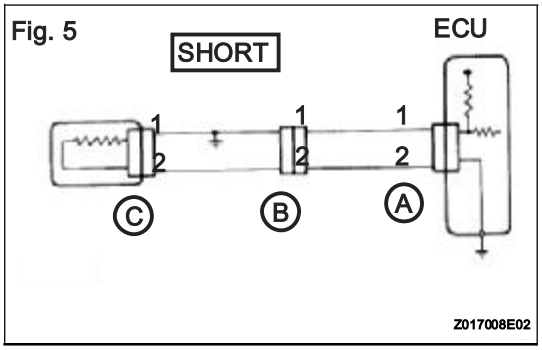

3. CHECK FOR SHORT CIRCUIT

(a) If the wire harness is ground shorted (Fig. 5), locate the section by conducting a resistance check with the body ground (below).

Fig. 6

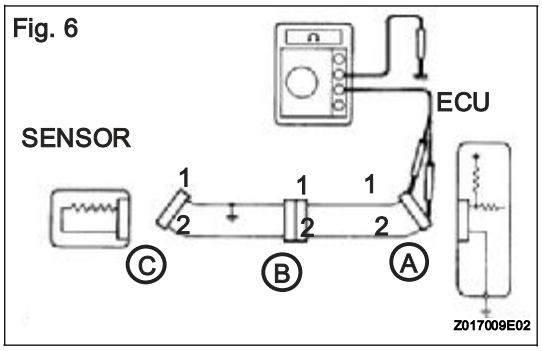

(b) Check the resistance with the body ground.

(1) Disconnect connectors A and C and measure the resistance.

Standard resistance (Fig. 6)

Tester Connection	Specified Condition
Connector A terminal 1 - Body ground	Below 1 Ω
Connector A terminal 2 - Body ground	10 kΩ or higher

HINT:
Measure the resistance while lightly shaking the wire harness vertically and horizontally. If your results match the examples above, a short circuit exists between terminal 1 of connector A and terminal 1 of connector C.

Fig. 7

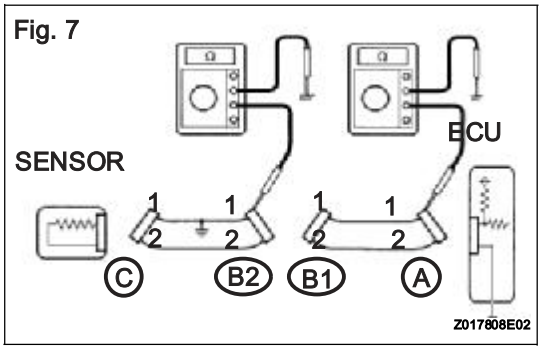

(2) Disconnect connector B and measure the resistance.

Standard resistance (Fig. 7)

Tester Connection	Specified Condition
Connector A terminal 1 - Body ground	10 kΩ or higher
Connector B2 terminal 1 - Body ground	Below 1 Ω

If the results match the examples above, a short circuit exists between terminal 1 of connector B2 and terminal 1 of connector C.

4. CHECK AND REPLACE ECU

NOTICE:

- **The connector should not be disconnected from the ECU. Perform the inspection from the backside of the connector on the wire harness side.**
- **When no measuring condition is specified, perform the inspection with the engine stopped and the ignition switch ON.**
- **Check that the connectors are fully seated. Check for loose, corroded or broken wires.**

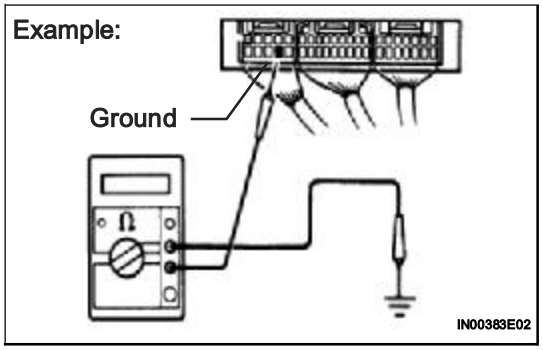

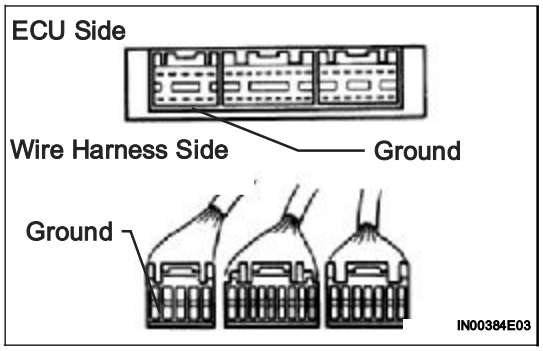

(a) First, check the ECU ground circuit. If it is faulty, repair it. If it is normal, the ECU could be faulty. Temporarily replace the ECU with a normally functioning one and check if the symptoms occur. If the trouble symptoms disappear, replace the original ECU.

(1) Measure the resistance between the ECU ground terminal and body ground.
Standard resistance:
Below 1 Ω

(2) Disconnect the ECU connector. Check the ground terminal on the ECU side and wire harness side for bending, corrosion or foreign matter. Lastly, check the contact pressure of the female terminals.

TERMS

ABBREVIATIONS USED IN MANUAL

IN

ABBREVIATIONS	MEANING
1st	First
2nd	Second
2WD	Two Wheel Drive Vehicle (4 x 2)
3rd	Third
4th	Fourth
4WD	Four Wheel Drive Vehicle (4 x 4)
4WS	Four Wheel Steering System
5th	Fifth
A.D.D.	Automatic Disconnecting Differential
A/C	Air Conditioner
A/F	Air-Fuel Ratio
A/T, ATM	Automatic Transmission (Transaxle)
ABS	Anti-Lock Brake System
AC	Alternating Current
ACC	Accessory
ACIS	Acoustic Control Induction System
ACM	Active Control Engine Mount
ACSD	Automatic Cold Start Device
AFS	Adaptive Front-Lighting System
AHC	Active Height Control Suspension
AID	Air Injection Control Driver
ALR	Automatic Locking Retractor
ALT	Alternator
AMP	Amplifier
ANT	Antenna
APPROX.	Approximately
ASSB	Assembly Services Sdn. Bhd.
ASSY	Assembly
ATF	Automatic Transmission Fluid
AUTO	Automatic
AUX	Auxiliary
AVG	Average
AVS	Adaptive Variable Suspension
B/L	Bi-Level
B/S	Bore-Stroke Ratio
B+	Battery Voltage
BA	Brake Assist
BACS	Boost Altitude Compensation System
BAT	Battery
BDC	Bottom Dead Center
BTDC	Before Top Dead Center
BVSV	Bimetallic Vacuum Switching Valve
C/V	Check Valve
Calif.	California
CAN	Controller Area Network
CB	Circuit Breaker

ABBREVIATIONS	MEANING
CCo	Catalytic Converter For Oxidation
CCV	Canister Closed Valve
CD	Compact Disc
CF	Cornering Force
CG	Center Of Gravity
CH	Channel
CKD	Complete Knock Down
COMB.	Combination
CPE	Coupe
CPS	Combustion Pressure Sensor
CPU	Central Processing Unit
CRS	Child Restraint System
CTR	Center
CV	Control Valve
CW	Curb Weight
D/INJ	Direct Injection
DC	Direct Current
DEF	Defogger
DFL	Deflector
DIFF.	Differential
DIFF. LOCK	Differential Lock
DLC	Data Link Connector
DLI	Distributorless Ignition
DOHC	Double Overhead Camshaft
DP	Dash Pot
DS	Dead Soak
DSP	Digital Signal Processor
DTC	Diagnostic Trouble Code
DVD	Digital Versatile Disc
E/G	Engine
EBD	Electronic Brake Force Distribution
EC	Electrochromic
ECAM	Engine Control And Measurement System
ECD	Electronically Controlled Diesel
ECDY	Eddy Current Dynamometer
ECT	Electronic Controlled Automatic Transmission/Transaxle
ECU	Electronic Control Unit
ED	Electro-Deposited Coating
EDIC	Electronic Diesel Injection Control
EDU	Electronic Driving Unit
EFI	Electronic Fuel Injection
EGR	Electronic Gas Recirculation
EGR	Exhaust Gas Recirculation
EGR-VM	EGR-Vacuum Modulator
ELR	Emergency Locking Retractor
EMPS	Electric Motor Power Steering
ENG	Engine
ES	Easy & Smooth
ESA	Electronic Spark Advance

IN

ABBREVIATIONS	MEANING
ETCS-i	Electronic Throttle Control System-intelligent
EVAP	Evaporative Emission Control
EVP	Evaporator
E-VRV	Electric Vacuum Regulating Valve
EX	Exhaust
F/G	Fuel Gauge
F/P	Fuel Pump
F/W	Flywheel
FE	Fuel Economy
FF	Front-Engine Front-Wheel-Drive
FIPG	Formed In Place Gasket
FL	Fusible Link
FPU	Fuel Pressure Up
FR / Fr	Front
FW/D	Flywheel Damper
FWD	Front-Wheel-Drive
GAS	Gasoline
GND	Ground
GPS	Global Positioning System
GSA	Gear Shift Actuator
H/B	Hatchback
HAC	High Altitude Compensator
H-FUSE	High Current Fuse
HI	High
HID	High Intensity Discharge (Headlamp)
HPU	Hydraulic Power Unit
HSG	Housing
HT	Hard Top
HV	Hybrid Vehicle
HWS	Heated Windshield System
I/P	Instrument Panel
IC	Integrated Circuit
IDI	Indirect Diesel Injection
IFS	Independent Front Suspension
IG	Ignition
IIA	Integrated Ignition Assembly
IN	Intake (Manifold, Valve)
INT	Intermittent
IRS	Independent Rear Suspension
ISC	Idle Speed Control
J/B	Junction Block
J/C	Junction Connector
KD	Kick-Down
L/H/W	Length, Height, Width
LAN	Local Area Network
LB	Liftback
LCD	Liquid Crystal Display
LED	Light Emitting Diode
LH	Left-Hand

ABBREVIATIONS	MEANING
LHD	Left-Hand Drive
LLC	Long-Life Coolant
LNG	Liquefied Natural Gas
LO	Low
LPG	Liquefied Petroleum Gas
LSD	Limited Slip Differential
LSP & PV	Load Sensing Proportioning and Bypass Valve
LSPV	Load Sensing Proportioning Valve
M/T, MTM	Manual Transmission (Transaxle)
MAP	Manifold Absolute Pressure
MAX.	Maximum
MG1	Motor Generator No.1
MG2	Motor Generator No.2
MIC	Microphone
MIL	Malfunction Indicator Lamp
MIN.	Minimum
MMT	Multi-mode Manual Transmission
MP	Multipurpose
MPI	Multipoint Electronic Injection
MPX	Multiplex Communication System
MT	Mount
MTG	Mounting
N	Neutral
NA	Natural Aspiration
NO. / No.	Number
O/D	Overdrive
O/S	Oversize
O2S	Oxygen Sensor
OC	Oxidation Catalyst
OCV	Oil Control Valve
OEM	Original Equipment Manufacturing
OHC	Overhead Camshaft
OHV	Overhead Valve
OPT	Option
ORVR	On-board Refilling Vapor Recovery
P & BV	Proportioning And Bypass Valve
P/W	Power Window
PBD	Power Back Door
PCS	Power Control System
PCV	Positive Crankcase Ventilation
PKB	Parking Brake
PPS	Progressive Power Steering
PROM	Programmable Read Only Memory
PS	Power Steering
PSD	Power Slide Door
PTC	Positive Temperature Coefficient
PTO	Power Take-Off
PZEV	Partial Zero Emission Vehicle
R & P	Rack and Pinion

IN

ABBREVIATIONS	MEANING
R/B	Relay Block
R/F	Reinforcement
RAM	Random Access Memory
RBS	Recirculating Ball Type Steering
RFS	Rigid Front Suspension
RH	Right-Hand
RHD	Right-Hand Drive
RLY	Relay
ROM	Read Only Memory
RR / Rr	Rear
RRS	Rigid Rear Suspension
RSE	Rear Seat Entertainment
RWD	Rear-Wheel Drive
SC	Supercharger
SCV	Swirl Control Valve
SDN	Sedan
SEN	Sensor
SICS	Starting Injection Control System
SOC	State Of Charge
SOHC	Single Overhead Camshaft
SPEC	Specification
SPI	Single Point Injection
SRS	Supplemental Restraint System
SSM	Special Service Materials
SST	Special Service Tools
STD	Standard
STJ	Cold-Start Fuel Injection
SW	Switch
SYS	System
T/A	Transaxle
T/M	Transmission
TACH	Tachometer
TAM	P.T. TOYOTA-Astra Motor
TASA	TOYOTA Argentina S.A.
TAT	TOYOTA Motor Thailand Co. Ltd.
TAW	TOYOTA Auto Works Co. Ltd.
TBI	Throttle Body Electronic Fuel Injection
TC	Turbocharger
TCCS	TOYOTA Computer-Controlled System
TCV	Timing Control Valve
TDC	Top Dead Center
TDV	TOYOTA de Venezuela C.A.
TEMP.	Temperature
TEMS	TOYOTA Electronic Modulated Suspension
TFT	TOYOTA Free-Tronic
TIS	Total Information System For Vehicle Development
TKM	TOYOTA Kirloskar Motor Ltd.
TMC	TOYOTA Motor Corporation
TMMIN	PT. TOYOTA Motor Manufacturing Indonesia

ABBREVIATIONS	MEANING
TMMK	TOYOTA Motor Manufacturing Kentucky, Inc.
TMP	TOYOTA Motor Philippines Corp.
TMT	TOYOTA Motor Thailand Co. Ltd.
TRAC	Traction Control System
TRC	Traction Control System
TSAM	TOYOTA South Africa Motors (Pty) Ltd.
TURBO	Turbocharge
TWC	Three-Way Catalyst
U/D	Underdrive
U/S	Undersize
VCV	Vacuum Control Valve
VENT	Ventilator
VGRS	Variable Gear Ratio Steering
VIM	Vehicle Interface Module
VIN	Vehicle Identification Number
VPS	Variable Power Steering
VSC	Vehicle Skid Control
VSC	Vehicle Stability Control
VSV	Vacuum Switching Valve
VTV	Vacuum Transmitting Valve
VVT-i	Variable Valve Timing-intelligent
W/ / w/	With
W/H	Wire Harness
W/O / w/o	Without
WGN	Wagon

IN

GLOSSARY OF SAE AND TOYOTA TERMS

This glossary lists all SAE-J1930 terms and abbreviations used in this manual in compliance with SAE recommendations, as well as their TOYOTA equivalents.

SAE ABBREVIATIONS	SAE TERMS	TOYOTA TERMS ( )-ABBREVIATIONS
3GR	Third Gear	-
4GR	Fourth Gear	-
A/C	Air Conditioning	Air Conditioner
ACL	Air Cleaner	Air Cleaner, A/CL
AIR	Secondary Air Injection	Air Injection (AI)
AP	Accelerator Pedal	-
B+	Battery Positive Voltage	+B, Battery Voltage
BARO	Barometric Pressure	HAC
CAC	Charge Air Cooler	Intercooler
CARB	Carburetor	Carburetor
CFI	Continuous Fuel Injection	-
CKP	Crankshaft Position	Crank Angle
CL	Closed Loop	Closed Loop
CMP	Camshaft Position	Cam Angle
CPP	Clutch Pedal Position	-
CTOX	Continuous Trap Oxidizer	-
CTP	Closed Throttle Position	LL ON, Idle ON
DFI	Direct Fuel Injection	Direct Injection (DI/INJ)
DI	Distributor Ignition	-
DLC3	Data Link Connector 3	OBD II Diagnostic Connector
DTC	Diagnostic Trouble Code	Diagnostic Trouble Code
DTM	Diagnostic Test Mode	-
ECL	Engine Coolant Level	-
ECM	Engine Control Module	Engine Electronic Control Unit (ECU)
ECT	Engine Coolant Temperature	Coolant Temperature, Water Temperature (THW)
EEPROM	Electrically Erasable Programmable Read Only Memory	Electrically Erasable Programmable Read Only Memory (EEPROM)
EFE	Early Fuel Evaporation	Cold Mixture Heater (CMH), Heat Control Valve (HCV)
EGR	Exhaust Gas Recirculation	Exhaust Gas Recirculation (EGR)
EI	Electronic Ignition	Distributorless Ignition (DLI)
EM	Engine Modification	Engine Modification (EM)
EPROM	Erasable Programmable Read Only Memory	Programmable Read Only Memory (PROM)
EVAP	Evaporative Emission	Evaporative Emission Control (EVAP)
FC	Fan Control	-
FEEPROM	Flash Electrically Erasable Programmable Read Only Memory	-
FEPROM	Flash Erasable Programmable Read Only Memory	-
FF	Flexible Fuel	-
FP	Fuel Pump	Fuel Pump
GEN	Generator	Alternator
GND	Ground	Ground (GND)
HO2S	Heated Oxygen Sensor	Heated Oxygen Sensor (HO2S)
IAC	Idle Air Control	Idle Speed Control (ISC)

SAE ABBREVIATIONS	SAE TERMS	TOYOTA TERMS ( )-ABBREVIATIONS
IAT	Intake Air Temperature	Intake or Inlet Air temperature
ICM	Ignition Control Module	-
IFI	Indirect Fuel Injection	Indirect Injection (IDL)
IFS	Inertia Fuel-Shutoff	-
ISC	Idle Speed Control	-
KS	Knock Sensor	Knock Sensor
MAF	Mass Air Flow	Air Flow Meter
MAP	Manifold Absolute Pressure	Manifold Pressure Intake Vacuum
MC	Mixture Control	Electric Bleed Air Control Valve (EBCV) Mixture Control Valve (MCV) Electric Air Control Valve (EACV)
MDP	Manifold Differential Pressure	-
MFI	Multiport Fuel Injection	Electronic Fuel Injection (EFI)
MIL	Malfunction Indicator Lamp	Check Engine Lamp
MST	Manifold Surface Temperature	-
MVZ	Manifold Vacuum Zone	-
NVRAM	Non-Volatile Random Access Memory	-
O2S	Oxygen Sensor	Oxygen Sensor, O2 Sensor (O2S)
OBD	On-Board Diagnostic	On-Board Diagnostic System (OBD)
OC	Oxidation Catalytic Converter	Oxidation Catalyst Converter (OC), CCo
OL	Open Loop	Open Loop
PAIR	Pulsed Secondary Air Injection	Air Suction (AS)
PCM	Powertrain Control Module	-
PNP	Park/Neutral Position	-
PROM	Programmable Read Only Memory	-
PSP	Power Steering Pressure	-
PTOX	Periodic Trap Oxidizer	Diesel Particulate Filter (DPF) Diesel Particulate Trap (DPT)
RAM	Random Access Memory	Random Access Memory (RAM)
RM	Relay Module	-
ROM	Read Only Memory	Read Only Memory (ROM)
RPM	Engine Speed	Engine Speed
SC	Supercharger	Supercharger
SCB	Supercharger Bypass	E-ABV
SFI	Sequential Multiport Fuel Injection	Electronic Fuel Injection (EFI), Sequential Injection
SPL	Smoke Puff Limiter	-
SRI	Service Reminder Indicator	-
SRT	System Readiness Test	-
ST	Scan Tool	-
TB	Throttle Body	Throttle Body
TBI	Throttle Body Fuel Injection	Single Point Injection Central Fuel Injection (Ci)
TC	Turbocharger	Turbocharger
TCC	Torque Converter Clutch	Torque Converter
TCM	Transmission Control Module	Transmission ECU, ECT ECU
TP	Throttle Position	Throttle Position
TR	Transmission Range	-
TVV	Thermal Vacuum Valve	Bimetallic Vacuum Switching Valve (BVSV) Thermostatic Vacuum Switching Valve (TVSV)

IN

SAE ABBREVIATIONS	SAE TERMS	TOYOTA TERMS ( )-ABBREVIATIONS
TWC	Three-Way Catalytic Converter	Three-Way Catalytic (TWC) Manifold Converter CCRO
TWC+OC	Three-Way + Oxidation Catalytic Converter	CCR + CCo
VAF	Volume Air Flow	Air Flow Meter
VR	Voltage Regulator	Voltage Regulator
VSS	Vehicle Speed Sensor	Vehicle Speed Sensor
WOT	Wide Open Throttle	Full Throttle
WU-OC	Warm Up Oxidation Catalytic Converter	-
WU-TWC	Warm Up Three-Way Catalytic Converter	-

1GR-FE ENGINE CONTROL SYSTEM

RECOMMENDED TOOLS

	09040-00011	Hexagon Wrench Set	
	(09043-20080)	Socket Hexagon Wrench 8	
	(09043-20100)	Socket Hexagon Wrench 10	
	09043-50100	Bi-hexagon Wrench 10 mm	
	09082-00040	TOYOTA Electrical Tester	
	(09083-00150)	Test Lead Set	

EQUIPMENT

Bar	
Ohmmeter	
Torque wrench	
Vernier caliper	
Voltmeter	
Dial indicator	
Wooden block	
Adhesive 1344	
Seal Packing 1282B	
Seal Packing Black	

1GR-FE ENGINE MECHANICAL

RECOMMENDED TOOLS

PP

	09040-00011	Hexagon Wrench Set	
	(09043-20080)	Socket Hexagon Wrench 8	
	(09043-20100)	Socket Hexagon Wrench 10	
	(09043-20120)	Socket Hexagon Wrench 12	
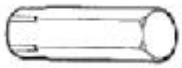	(09043-30140)	Straight Hexagon Wrench 14	
	09043-50100	Bi-hexagon Wrench 10 mm	

EQUIPMENT

Abrasive compound	
Brush	
Caliper gauge	
Carbide cutter	
V-block	
Pin hole grinder	
Piston ring compressor	
Piston ring expander	
CO/HC meter	
Compression gauge	
Connecting rod aligner	
Cylinder gauge	
Dial indicator	
Dye penetrant	
Pin punch	
Spring scale	
Feeler gauge	
Micrometer	
Precision straight edge	
Press	
Reamer	
Ridge reamer	
Soft brush	
Solvent	
Radiator cap tester	
Steel square	
Grinder	
Torque wrench	
"Torx" socket wrench	
Plastic hammer	
Valve guide bushing brush	
Vernier caliper	
Wire brush	
Dial indicator with magnetic base	
Deep socket wrench	
Magnetic finger	
Scraper	
Wooden block	
Chain block	
Spring tester	
Plastigage	
Heater	
Timing light	
Bar	
Pin hole grinder	
Seal Packing Black	
Seal Packing 1282B	
Adhesive 1324	

1GR-FE FUEL

RECOMMENDED TOOLS

	09040-00011	Hexagon Wrench Set	
	(09043-20080)	Socket Hexagon Wrench 8	
	09082-00040	TOYOTA Electrical Tester	
	(09083-00150)	Test Lead Set	

EQUIPMENT

Stopwatch	
Measuring flask	
Radiator cap tester	
Torque wrench	
Clip	

1GR-FE EMISSION CONTROL

RECOMMENDED TOOLS

	09082-00040	TOYOTA Electrical Tester	
	(09083-00150)	Test Lead Set	

EQUIPMENT

Ohmmeter	
Torque wrench	
Hand-held vacuum pump	
Adhesive 1344	

1GR-FE INTAKE

RECOMMENDED TOOLS

PP

	09082-00040	TOYOTA Electrical Tester	
	(09083-00150)	Test Lead Set	

EQUIPMENT

Service Wire Harness	
Ohmmeter	
Hand-held Vacuum Pump	
3-way Connector	
Vacuum Gauge	

1GR-FE COOLING

EQUIPMENT

Torque wrench	
Radiator cap tester	
Thermometer	
Heater	
Vernier calipers	

COOLANT

Item		Capacity	Classification
Engine coolant	Manual transmission	9.4 liters (9.9 US qts, 8.3 Imp. qts)	"TOYOTA SUPER LONG LIFE Antifreeze Coolant" or equivalent
	Automatic transmission	9.8 liters (10.4 US qts, 8.6 Imp. qts)	

1GR-FE EXHAUST

EQUIPMENT

Torque wrench	
Vernier calipers	
Wooden block	
plastic-faced Hammer	

1GR-FE LUBRICATION

RECOMMENDED TOOLS

	09040-00011	Hexagon Wrench Set	
	(09043-20080)	Socket Hexagon Wrench 8	

EQUIPMENT

Feeler gauge	
Precision straight edge	
Torque wrench	
Vernier caliper	
Dial indicator with magnetic base	
Wooden block	
Seal Packing Black	
Seal Packing 1282B	
Adhesive 1344	

LUBRICANT

Item	Capacity	Classification
Oil grade	-	ILSAC multigrade engine oil, SAE 5W-30
with Oil filter change	5.2 liter (5.5 US qts, 4.6 Imp. qts)	-
without Oil filter change	4.9 liter (5.2 US qts, 4.3 Imp. qts)	-
Dry fill	6.0 liter (6.3 US qts, 5.3Imp. qts)	-

1GR-FE IGNITION

RECOMMENDED TOOLS

	09082-00040	TOYOTA Electrical Tester	
	(09083-00150)	Test Lead Set	
	09200-00010	Engine Adjust Kit	
	(09857-00031)	Spark Plug Gap Gauge	

EQUIPMENT

Ohmmeter	
Torque wrench	
Spark plug cleaner	

1GR-FE STARTING

RECOMMENDED TOOLS

	09082-00040	TOYOTA Electrical Tester	
	(09083-00150)	Test Lead Set	

EQUIPMENT

Service wire harness	
V-block	
Ammeter	
Dial indicator with magnetic base	
Ohmmeter	
Torque wrench	
Vernier calipers	
Magnetic finger	

1GR-FE CHARGING

RECOMMENDED TOOLS

PP

	09082-00040	TOYOTA Electrical Tester	
	(09083-00150)	Test Lead Set	

EQUIPMENT

Service wire harness	
Ammeter	
Ohmmeter	
Torque wrench	
Vernier calipers	

A750E AUTOMATIC TRANSMISSION

SST

	09023-12701	Union Nut Wrench 17mm	
	09223-15020	Oil Seal & Bearing Replacer	
	09308-00010	Oil Seal Puller	
	09320-89010	Transfer Clutch Spring Compressor	
	09325-40010	Transmission Oil Plug	
	09350-30020	TOYOTA Automatic Transmission Tool Set	
	(09350-07020)	Oil Pump Puller	
	(09350-07040)	No.2 Piston Spring Compressor	
	(09350-07050)	No.3 Piston Spring Compressor	
	(09350-07060)	No.1 Snap Ring Expander	
	(09350-07070)	No.2 Snap Ring Expander	

PP

PP

	(09350-07080)	Brake Reaction Sleeve Puller	
	(09350-07090)	Brake No.1 Piston Puller	
	(09350-07110)	Oil Seal Replacer	
	(09351-32140)	Oil Seal Replacer	
	09350-32014	TOYOTA Automatic Transmission Tool Set	
	(09351-32020)	Stator Stopper	
	09351-40010	Tool Set, TOYOTA Automatic Transmission	
	09387-00070	First & Reverse Brake Wrench	
	09710-30050	Suspension Arm Bushing Replacer	
	09843-18040	Diagnosis Check Wire No.2	
	09950-70010	Handle Set	
	(09951-07100)	Handle 100	

	09992-00095	Automatic Transmission Oil Pressure Gauge Set	
	(09992-00231)	Adaptor C	
	(09992-00271)	Gauge Assy	

RECOMMENDED TOOLS

	09040-00011	Hexagon Wrench Set	
	(09043-20060)	Socket Hexagon Wrench 6	
	(09043-20100)	Socket Hexagon Wrench 10	
	09082-00040	TOYOTA Electrical Tester	
	(09083-00150)	Test Lead Set	

PP

EQUIPMENT

Feeler gauge	
Cylinder gauge	
Vernier calipers	
Dial indicator	
Micrometer	
Straight edge	
Torque wrench	
Angle gauge	
V-block	
Dial indicator or dial indicator with magnetic base	

LUBRICANT

Item	Capacity	Classification
Automatic transmission fluid: (Dry fill)	10.4 liter (11 US qts, 9.2 Imp. qts)	ATF WS
Automatic transmission fluid: (Drain and refill)	3.0 liter (3.2 US qts, 2.6 Imp. qts)	ATF WS

A750F AUTOMATIC TRANSMISSION

SST

	09023-12701	Union Nut Wrench 17mm	
	09226-10010	Crankshaft Front & Rear Bearing Replacer	
	09320-89010	Transfer Clutch Spring Compressor	
	09350-30020	TOYOTA Automatic Transmission Tool Set	
	(09350-07020)	Oil Pump Puller	
	(09350-07040)	No.2 Piston Spring Compressor	
	(09350-07050)	No.3 Piston Spring Compressor	
	(09350-07060)	No.1 Snap Ring Expander	
	(09350-07070)	No.2 Snap Ring Expander	
	(09350-07080)	Brake Reaction Sleeve Puller	
	(09350-07090)	Brake No.1 Piston Puller	

PP

	(09350-07110)	Oil Seal Replacer	
	(09351-32140)	Oil Seal Replacer	
	09350-32014	TOYOTA Automatic Transmission Tool Set	
	(09351-32020)	Stator Stopper	
	09351-40010	Tool Set, TOYOTA Automatic Transmission	
	09387-00070	First & Reverse Brake Wrench	
	09843-18040	Diagnosis Check Wire No.2	
	09992-00095	Automatic Transmission Oil Pressure Gauge Set	
	(09992-00231)	Adaptor C	
	(09992-00271)	Gauge Assy	

RECOMMENDED TOOLS

	09040-00011	Hexagon Wrench Set	
	(09043-20060)	Socket Hexagon Wrench 6	
	(09043-20100)	Socket Hexagon Wrench 10	
	09082-00040	TOYOTA Electrical Tester	
	(09083-00150)	Test Lead Set	

EQUIPMENT

Feeler gauge	
Cylinder gauge	
Vernier calipers	
Dial indicator	
Micrometer	
Straight edge	
Torque wrench	
Angle gauge	
V-block	
Dial indicator or dial indicator with magnetic base	

LUBRICANT

Item	Capacity	Classification
Automatic transmission fluid: (Dry fill)	10.4 litter (11 US qts, 9.2 Imp. qts)	ATF WS
Automatic transmission fluid: (Drain and refill)	3.0 litter (3.2 US qts, 2.6 Imp. qts)	ATF WS

CLUTCH

SST

	09023-00101	Union Nut Wrench 10 mm	
	09301-00220	Clutch Guide Tool	
	09333-00013	Universal Joint Bearing Remover & Replacer	

RECOMMENDED TOOLS

	09082-00040	TOYOTA Electrical Tester	
	(09083-00150)	Test Lead Set	

EQUIPMENT

Vernier calipers	
Dial indicator with magnetic base	
Torque wrench	

LUBRICANT

Item	Capacity	Classification
Brake fluid	-	SAE J1703 or FMVSS NO. 116 DOT 3

RA61F MANUAL TRANSMISSION

SST

	09023-00101	Union Nut Wrench 10 mm	
	09308-00010	Oil Seal Puller	
	09308-14010	Replacer Pipe A	
	09309-37010	Transmission Bearing Replacer	
	09316-60011	Transmission & Transfer Bearing Replacer	
	(09316-00011)	Replacer Pipe	
	09556-16030	Differential Drive Pinion Holding Tool 28	
	09608-06041	Front Hub Inner Bearing Cone Replacer	
	09817-16011	Back-up Light Switch Tool	
	09950-00020	Bearing Remover	
	09950-60010	Replacer Set	

PP

	(09951-00300)	Replacer 30	
	(09951-00320)	Replacer 32	
	(09951-00470)	Replacer 47	
	(09951-00510)	Replacer 51	
	(09951-00540)	Replacer 54	
	(09951-00650)	Replacer 65	
	09950-60020	Replacer Set No.2	
	(09951-00790)	Replacer 79	
	09950-70010	Handle Set	
	(09951-07100)	Handle 100	
	(09951-07200)	Handle 200	
	(09951-07360)	Handle 360	

RECOMMENDED TOOLS

	09031-00040	Pin Punch .	
	09040-00011	Hexagon Wrench Set	
	(09043-20100)	Socket Hexagon Wrench 10	
	(09043-30240)	Straight Hexagon Wrench 24	
	09905-00012	Snap Ring No.1 Expander	
	09905-00013	Snap Ring Pliers	

PP

EQUIPMENT

Cylinder gauge	
Dial indicator	
Feller gauge	
Micrometer	
Torque wrench	
Vernier calipers	
Press	
V-block	

LUBRICANT

Item	Capacity	Classification
Manual transmission oil	1.8 liters (1.9 US qts, 1.6 Imp. qts)	API GL-4 or GL-5 SAE 75W-90

VF2A TRANSFER

SST

	09223-15020	Oil Seal & Bearing Replacer	
	09223-46011	Crankshaft Front Oil Seal Replacer	
	09308-00010	Oil Seal Puller	
	09316-60011	Transmission & Transfer Bearing Replacer	
	(09316-00011)	Replacer Pipe	
	(09316-00031)	Replacer B	
	(09316-00071)	Replacer F	
	09330-00021	Companion Flange Holding Tool	
	09515-30010	Rear Wheel Bearing Replacer	
	09554-30011	Differential Oil Seal Replacer	
	09555-55010	Differential Drive Pinion Bearing Replacer	

	09612-65014	Steering Worm Bearing Puller	
	(09612-01030)	Claw C	
	(09612-01050)	Hanger Pin with Nut	
	09631-32020	Seal Ring Tool	
	09950-40011	Puller B Set	
	(09951-04020)	Hanger 200	
	(09952-04010)	Slide Arm	
	(09953-04030)	Center Bolt 200	
	(09954-04010)	Arm 25	
	(09955-04051)	Claw No.5	
	(09957-04010)	Attachment	
	(09958-04011)	Holder	

PP

	09950-60010	Replacer Set	
	(09951-00320)	Replacer 32	
	(09951-00570)	Replacer 57	
	(09951-00590)	Replacer 59	
	09950-70010	Handle Set	
	(09951-00710)	Replacer 71	
	(09951-07100)	Handle 100	

EQUIPMENT

Dial indicator with magnetic base	
Micrometer	
Plastic-faced hammer	
Torque wrench	
Vernier caliper	

LUBRICANT

Item	Capacity	Classification
Transfer oil	1.0 liters (1.1 US qts, 0.9 Imp. qts)	API GL-3 SAE 75W-90

VF4B TRANSFER

SST

	09223-15020	Oil Seal & Bearing Replacer	
	09223-46011	Crankshaft Front Oil Seal Replacer	
	09304-12012	Input Shaft Front Bearing Replacer	
	09308-00010	Oil Seal Puller	
	09316-60011	Transmission & Transfer Bearing Replacer	
	(09316-00011)	Replacer Pipe	
	(09316-00031)	Replacer B	
	(09316-00071)	Replacer F	
	09330-00021	Companion Flange Holding Tool	
	09515-30010	Rear Wheel Bearing Replacer	
	09554-30011	Differential Oil Seal Replacer	

PP

	09555-55010	Differential Drive Pinion Bearing Replacer	
	09612-65014	Steering Worm Bearing Puller	
	(09612-01030)	Claw C	
	(09612-01050)	Hanger Pin with Nut	
	09631-32020	Seal Ring Tool	
	09950-40011	Puller B Set	
	(09951-04020)	Hanger 200	
	(09952-04010)	Slide Arm	
	(09953-04030)	Center Bolt 200	
	(09954-04010)	Arm 25	
	(09955-04051)	Claw No.5	
	(09957-04010)	Attachment	

	(09958-04011)	Holder	
	09950-60010	Replacer Set	
	(09951-00320)	Replacer 32	
	(09951-00570)	Replacer 57	
	(09951-00590)	Replacer 59	
	09950-70010	Handle Set	
	(09951-07100)	Handle 100	

EQUIPMENT

Dial indicator with magnetic base	
Micrometer	
Plastic-faced hammer	
Torque wrench	
Vernier caliper	

LUBRICANT

Item	Capacity	Classification
Transfer oil	1.4 liters (1.5 US qts, 1.3 Imp. qts)	API GL-5 SAE 75W-90

PROPELLER SHAFT

SST

PP

	09325-40010	Transmission Oil Plug	
	09332-25010	Propeller Shaft Center Bearing Replacer	

EQUIPMENT

Dial Indicator with magnetic base	
Torque wrench	

DRIVE SHAFT

SST

	09240-00020	Wire Gauge Set	
	09520-01010	Drive Shaft Remover Attachment	
	09520-24010	Differential Side Gear Shaft Puller	
	(09520-32040)	Shocker Set	
	09521-24010	Rear Axle Shaft Puller	
	09527-10011	Rear Axle Shaft Bearing Remover	
	09628-62011	Boll Joint Puller	
	09950-00020	Bearing Remover	

RECOMMENDED TOOLS

	09040-00011	Hexagon Wrench Set	
	(09043-20050)	Socket Hexagon Wrench 5	
	09905-00012	Snap Ring No.1 Expander	

EQUIPMENT

Torque wrench	

LUBRICANT

Item	Capacity
Front drive shaft outboard joint grease	260 to 270 g (9.2 to 9.5 oz.)
Front drive shaft inboard joint grease	231 to 241 g (8.1 to 8.5 oz.)

DIFFERENTIAL

SST

	09223-00010	Cover & Seal Replacer	
	09223-15020	Oil Seal & Bearing Replacer	
	09308-00010	Oil Seal Puller	
	09308-10010	Oil Seal Puller	
	09316-60011	Transmission & Transfer Bearing Replacer	
	(09316-00011)	Replacer Pipe	
	(09316-00021)	Replacer A	
	(09316-00041)	Replacer C	
	09330-00021	Companion Flange Holding Tool	
	(09330-00030)	Pin	
	09350-20015	TOYOTA Automatic Transmission Tool Set	

PP

	(09369-20040)	Piston Spring Compressor Set	
	09502-12010	Differential Bearing Replacer	
	09504-00011	Differential Side Bearing Adjusting Nut Wrench	
	09506-30012	Differential Drive Pinion Rear Bearing Cone Replacer	
	09550-00032	Replacer	
	09554-22010	Differential Oil Seal Replacer	
	09554-30011	Differential Oil Seal Replacer	
	09556-22010	Drive Pinion Front Bearing Remover	
	09564-32011	Differential Preload Adaptor	
	09608-32010	Steering Knuckle Oil Seal Replacer	
	09612-65014	Steering Worm Bearing Puller	
	(09612-01020)	Claw B	

	(09612-01050)	Hanger Pin with Nut	
	09636-20010	Upper Ball Joint Dust Cover Replacer	
	09930-00010	Drive Shaft Nut Chisel	
	09950-00020	Bearing Remover	
	(09951-00680)	Replacer 68	
	(09951-00890)	Replacer 89	
	09950-30012	Puller A Set	
	(09951-03010)	Upper Plate	
	(09953-03010)	Center Bolt	
	(09954-03010)	Arm	
	(09955-03030)	Lower Plate 130	
	(09956-03020)	Adapter 18	

PP

	(09956-03030)	Adaptor 20	
	09950-40011	Puller B Set	
	(09951-04010)	Hanger 150	
	(09951-04020)	Hanger 200	
	(09952-04010)	Slide Arm	
	(09953-04020)	Center Bolt 150	
	(09953-04030)	Center Bolt 200	
	(09954-04010)	Arm 25	
	(09955-04011)	Claw No.1	
	(09955-04061)	Claw No.6	
	(09957-04010)	Attachment	
	(09958-04011)	Holder	

	09950-60010	Replacer Set	
	(09951-00360)	Replacer 36	
	(09951-00380)	Replacer 38	
	(09951-00430)	Replacer 43	
	(09951-00470)	Replacer 47	
	(09951-00480)	Replacer 48	
	(09951-00510)	Replacer 51	
	(09951-00520)	Replacer 52	
	(09951-00550)	Replacer 55	
	(09951-00610)	Replacer 61	
	09950-60020	Replacer Set No.2	
	(09951-00680)	Replacer 68	

PP

	(09951-00810)	Replacer 81	
	09950-70010	Handle Set	
	(09951-00560)	Replacer 56	
	(09951-00570)	Replacer 57	
	(09951-07100)	Handle 100	
	(09951-07150)	Handle 150	
	09960-10010	Variable Pin Wrench Set	
	(09962-01000)	Variable Pin Wrench Arm Assembly	
	(09963-00700)	Pin 7	

RECOMMENDED TOOLS

	09011-12301	Socket Wrench 30 mm	
	09031-00030	Pin Punch	
	09044-00010	Torx Socket E14	
	09905-00012	Snap Ring No.1 Expander	
	09905-00013	Snap Ring Pliers	

EQUIPMENT

Brass bar	
Chisel	
Dial indicator	
Feeler gauge	
Hammer	
Micrometer	
Needle nose pliers	
Plastic hammer	
Press	
Prussian blue	
Screwdriver	
Tape	
Torque wrench	
Vernier calipers	

LUBRICANT

Front differential

Item	Capacity	Oil grade	Classification
w/ A.D.D.	1.45 to 1.55 liters (1.53 to 1.63 US qts, 1.27 to 1.36 Imp. qts.)	Hypoid gear oil APL GL-4 and GL-5	Above-18°C (0°F): SAE 90 Below-18°C (0°F): SAE 75W-90
w/o A.D.D.	1.35 to 1.45 liters (1.42 to 1.53 US qts, 1.18 to 1.27 Imp. qts.)	Hypoid gear oil APL GL-4 and GL-5	Above-18°C (0°F): SAE 90 Below-18°C (0°F): SAE 85W-90

Rear differential

Item	Capacity	Oil grade	Classification
w/ Differential lock	2.85 to 2.95 liters (3.01 to 3.12 US qts, 2.51 to 2.60 Imp. qts.)	Hypoid gear oil APL GL-5	Above-18°C (0°F): SAE 90 Below-18°C (0°F): SAE 85W-90
w/o Differential lock	2.95 to 3.05 liters (3.12 to 3.22 US qts, 2.60 to 2.68 Imp. qts.)	Hypoid gear oil APL GL-5	Above-18°C (0°F): SAE 90 Below-18°C (0°F): SAE 85W-90

AXLE

SST

	09023-00101	Union Nut Wrench 10 mm	
	09308-00010	Oil Seal Puller	
	09318-12010	Transfer Bearing Adjusting Nut Wrench	
	09521-25011	Rear Axle Shaft Puller	
	09521-25021	Rear Axle Shaft Puller Attachment	
	09527-17011	Rear Axle Shaft Bearing Remover	
	09628-62011	Boll Joint Puller	
	09631-12090	Seal Ring Tool	
	09649-17010	Steering Knuckle Tool	
	09650-17011	Hub Bolt Remover	
	09710-30021	Suspension Bushing Tool Set	

	(09710-03051)	Bushing Replacer	
	09726-40010	Lower Control Shaft Bearing Replacer	
	09930-00010	Drive Shaft Nut Chisel	
	09950-40011	Puller B Set	
	(09951-04020)	Hanger 200	
	(09952-04010)	Slide Arm	
	(09953-04020)	Center Bolt 150	
	(09954-04010)	Arm 25	
	(09955-04061)	Claw No.6	
	(09957-04010)	Attachment	
	(09958-04011)	Holder	
	09950-60020	Replacer Set No.2	

PP

	(09951-00770)	Replacer 77	
	09950-70010	Handle Set	
	(09951-07100)	Handle 100	
	(09951-07150)	Handle 150	
	09951-01000	Replacer 100	
	09951-01100	Replacer 110	

RECOMMENDED TOOLS

	09905-00012	Snap Ring No.1 Expander	

EQUIPMENT

Dial indicator with magnetic base	
Torque wrench	

SUSPENSION

SST

	09023-00101	Union Nut Wrench 10 mm	
	09502-12010	Differential Bearing Replacer	
	09613-26010	Steering Worm Bearing Cone Remover	
	09628-00011	Ball Joint Puller	
	09628-62011	Boll Joint Puller	
	09631-12090	Seal Ring Tool	
	09631-32020	Seal Ring Tool	
	09710-22021	Front Suspension Bushing Tool Set	
	(09710-01031)	Upper Arm Bushing Replacer	
	(09710-01071)	Lower Arm Bushing Remover	
	(09710-01081)	Lower Arm Bushing Replacer	

PP

	09710-26010	Rear Suspension Bushing Tool Set	
	(09710-05061)	Replacer	
	09727-00060	Arm Set C	
	09727-30021	Coil Spring Compressor	
	(09727-00010)	Bolt Set	
	(09727-00031)	Compressor	
	09950-00020	Bearing Remover	
	09950-40011	Puller B Set	
	(09951-04010)	Hanger 150	
	(09952-04010)	Slide Arm	
	(09953-04020)	Center Bolt 150	
	(09954-04010)	Arm 25	

	(09955-04011)	Claw No.1	
	(09957-04010)	Attachment	
	(09958-04011)	Holder	
	09950-60010	Replacer Set	
	(09951-00470)	Replacer 47	
	(09951-00520)	Replacer 52	

PP

RECOMMENDED TOOLS

	09040-00011	Hexagon Wrench Set	
	(09043-20060)	Socket Hexagon Wrench 6	

EQUIPMENT

Alignment tester	
Angle gauge	
Camber-caster-kingpin gauge	
Tire pressure gauge	
Toe-in gauge	
Wheel balancer	
Dial indicator with magnetic base	
Torque wrench	
Drill	

TIRE AND WHEEL

EQUIPMENT

Dial indicator with magnetic base	
Wheel balancer	

BRAKE CONTROL

RECOMMENDED TOOLS

	09040-00011	Hexagon Wrench Set	
	(09043-20050)	Socket Hexagon Wrench 5	
	09082-00040	TOYOTA Electrical Tester	
	(09083-00150)	Test Lead Set	

EQUIPMENT

Torque wrench	

BRAKE

SST

	09023-00101	Union Nut Wrench 10 mm	
	09709-29018	LSPV Gauge Set	

PP

RECOMMENDED TOOLS

	09031-00030	Pin Punch	
	09040-00011	Hexagon Wrench Set	
	(09043-20050)	Socket Hexagon Wrench 5	

EQUIPMENT

Torque wrench	
Ruler	
Micrometer	
Dial indicator with magnetic base	

LUBRICANT

Item	Capacity	Classification
Brake fluid	-	SAE J1703 or FMVSS No. 116 DOT3

PARKING BRAKE

EQUIPMENT

Torque wrench	
Brake drum gauge	
Ruler	
Feeler gauge	
Ohmmeter	

STEERING COLUMN

SST

	09316-60011	Transmission & Transfer Bearing Replacer	
	(09316-00051)	Replacer D	
	09921-00010	Spring Tension Tool	
	09950-40011	Puller B Set	
	(09951-04010)	Hanger 150	
	(09952-04010)	Slide Arm	
	(09953-04020)	Center Bolt 150	
	(09954-04010)	Arm 25	
	(09955-04061)	Claw No.6	
	(09958-04011)	Holder	
	09950-50013	Puller C Set	

	(09951-05010)	Hanger 150	
	(09952-05010)	Slide Arm	
	(09953-05020)	Center Bolt 150	
	(09954-05021)	Claw No.2	

RECOMMENDED TOOLS

	09031-00030	Pin Punch	
	09042-00010	Torx Socket T30	
	(09043-20060)	Socket Hexagon Wrench 6	
	09904-00010	Expander Set	
	(09904-00050)	No. 4 Claw	

EQUIPMENT

Torque wrench	

POWER STEERING

SST

	09023-12701	Union Nut Wrench 17mm	
	09023-38201	Union Nut Wrench 12mm	
	09612-00012	Rack & Pinion Steering Rack Housing Stand	
	09616-00011	Steering Worm Bearing Adjusting Socket	
	09628-62011	Boll Joint Puller	
	09630-00014	Power Steering Gear Housing Overhaul Tool Set	
	(09631-00132)	Vane Pump Bracket	
	09631-00350	Steering Rack Cover 35	
	09631-12071	Steering Rack Oil Seal Test Tool	
	(09633-00010)	Packing	
	09631-20120	Cylinder End Stopper Nut Wrench	

	09640-10010	Power Steering Pressure Gauge Set	
	(09641-01010)	Gauge Assy	
	(09641-01030)	Attachment B	
	(09641-01060)	Attachment E	
	09922-10010	Variable Open Wrench	
	09950-60010	Replacer Set	
	(09951-00280)	Replacer 28	
	09950-70010	Handle Set	
	(09951-07100)	Handle 100	
	(09951-07200)	Handle 200	

EQUIPMENT

Dial indicator with magnetic base	
Feeler gauge	
Micrometer	
Vernier caliper	
Torque wrench	
Vernier caliper	
Wooden block	

LUBRICANT

Item	Capacity	Classification
Power steering fluid	-	ATF "DEXRON" II or III

AIR CONDITIONING

SST

	07110-58060	Air Conditioner Service Tool Set	
	(07117-58080)	Quick Disconnect Adapter	
	(07117-58090)	Quick Disconnect Adapter	
	(07117-78050)	Refrigerant Charging Gauge	
	(07117-88060)	Refrigerant Charging Hose	
	(07117-88070)	Refrigerant Charging Hose	
	(07117-88080)	Refrigerant Charging Hose	
	09870-00015	A/C Quick Joint Puller No.1	
	09870-00025	A/C Quick Joint Puller No.2	
	09960-10010	Variable Pin Wrench Set	
	(09962-01000)	Variable Pin Wrench Arm Assembly	

	(09963-00500)	Pin 5	

RECOMMENDED TOOLS

	09082-00040	TOYOTA Electrical Tester	
	(09083-00150)	Test Lead Set	
	95146-00180	Halogen Leak Detector DENSO Part No.	

EQUIPMENT

Voltmeter	
Ohmmeter	
Vacuum pump	
Vinyl tape	
Dial indicator or dial indicator with magnetic base	
Torque wrench	
Service wire harness	
Radiator cap tester	

LUBRICANT

Item	Capacity	Classification
Compressor oil	-	ND-OIL8 or equivalent
When replacing No. 1 cooler evaporator	40 cc (1.35 fl. oz.)	ND-OIL8 or equivalent
When replacing cooler condenser	40 cc (1.35 fl. oz.)	ND-OIL8 or equivalent

SUPPLEMENTAL RESTRAINT SYSTEM

SST

	09082-00700	SRS Airbag Deployment Tool	
	09082-00750	Airbag Deployment Wire Sub-harness No.3	
	09082-00760	Airbag Deployment Wire Sub-harness No.4	
	09082-00780	Airbag Deployment Wire Sub-harness No.6	
	09082-00802	Airbag Deployment Wire Sub-Harness No. 8	
	(09082-10801)	Wire A	
	(09082-30801)	Wire C	
	09843-18060	SRS Check Wire	

PP

RECOMMENDED TOOLS

	09042-00010	Torx Socket T30	
	09082-00040	TOYOTA Electrical Tester	
	(09083-00150)	Test Lead Set	

HINT:
Torx is a registered trademark of Textron Inc.

EQUIPMENT

Torque wrench	
Ohmmeter	
Bolt Length: 35.0 mm (1.378 in.) Diameter: 6.0 mm (0.236 in.) Pitch: 1.0 mm (0.039 in.)	Airbag disposal
Tire Width: 185 mm (7.28 in.) Inner diameter: 360 mm (14.17 in.)	Airbag disposal
Tire with disc wheel Width: 185 mm (7.28 in.) Inner diameter: 360 mm (14.17 in.)	Airbag disposal
Plastic bag	Airbag disposal
Battery	Airbag disposal
Knife	Airbag disposal
Service-purpose wire harness	Airbag disposal
Shop rag or pice of cloth	Airbag disposal
Service wire	Airbag disposal

SEAT BELT

SST

	09082-00700	SRS Airbag Deployment Tool	
	09082-00770	Airbag Deployment Wire Sub-harness No.5	

RECOMMENDED TOOLS

	09082-00040	TOYOTA Electrical Tester	
	(09083-00150)	Test Lead Set	

EQUIPMENT

Battery	
Knife	
Ohmmeter	
Plastic bag	
Service-purpose wire harness	
Service wire harness	
Tire with wheel	
Torque wrench	

CRUISE CONTROL

RECOMMENDED TOOLS

PP

	09082-00040	TOYOTA Electrical Tester	
	(09083-00150)	Test Lead Set	

EQUIPMENT

Ohmmeter	
Vinyl tape	
Torque wrench	

LIGHTING

RECOMMENDED TOOLS

	09042-00010	Torx Socket T30	
	09082-00040	TOYOTA Electrical Tester	
	(09083-00150)	Test Lead Set	

EQUIPMENT

Protective tape	
Ohmmeter	
Service wire harness	
Voltmeter	
Torque wrench	

WIPER AND WASHER

RECOMMENDED TOOLS

PP

	09042-00010	Torx Socket T30	
	09082-00040	TOYOTA Electrical Tester	
	(09083-00150)	Test Lead Set	

EQUIPMENT

Battery	
Ohmmeter	
Protective tape	
Brush	
Vinyl tape	
Service wire harness	
Torque wrench	

DOOR LOCK

RECOMMENDED TOOLS

	09042-00010	Torx Socket T30	
	09082-00040	TOYOTA Electrical Tester	
	(09083-00150)	Test Lead Set	

EQUIPMENT

Protective tape	
Ohmmeter	
Service wire harness	
MP grease	
Torque wrench	

SSM

Toyota Genuine Adhesive 1324, Three Bond 1324 or the equivalent	

METER

RECOMMENDED TOOLS

	09082-00040	TOYOTA Electrical Tester	
	(09083-00150)	Test Lead Set	

PP

EQUIPMENT

Torque wrench	
Tape	To avoid surface damage

AUDIO / VISUAL

RECOMMENDED TOOLS

	09082-00040	TOYOTA Electrical Tester	
	(09083-00150)	Test Lead Set	

EQUIPMENT

Battery	
Clip remover	
Ohmmeter	
Protective tape	
Service wire harness	
Torque wrench	

PARK ASSIST / MONITORING

RECOMMENDED TOOLS

PP

	09082-00040	TOYOTA Electrical Tester	
	(09083-00150)	Test Lead Set	

EQUIPMENT

Battery	
Ohmmeter	
Service wire harness	
Torque wrench	

HORN

RECOMMENDED TOOLS

	09082-00040	TOYOTA Electrical Tester	
	(09083-00150)	Test Lead Set	

EQUIPMENT

Battery	
Ohmmeter	
Service wire harness	
Torque wrench	

OTHER SYSTEM

EQUIPMENT

Battery	
Ohmmeter	
Protective tape	
Voltmeter	
Service wire harness	
Torque wrench	

WINDSHIELD / WINDOWGLASS

RECOMMENDED TOOLS

	09041-00020	Torx Driver T25	
	09082-00040	TOYOTA Electrical Tester	
	(09083-00150)	Test Lead Set	

EQUIPMENT

Ohmmeter	
Service wire harness	
Ammeter	
MP grease	
Knife	
Piano wire	
Suction cup	
Plastic sheet	
Brush	
Sponge	
Sealer gun	
Wooden block	
Voltmeter	
Tin foil	
Masking tape	
Torque wrench	

SSM

Toyota Genuine Windshield Glass Adhesive or the equivalent	

MIRROR

EQUIPMENT

Protective tape	
Service wire harness	
Ohmmeter	
Torque wrench	

INSTRUMENT PANEL

EQUIPMENT

Torque wrench	
Tape	To avoid surface damage

SEAT

EQUIPMENT

Clip remover	
Hog ring pliers	
Protective tape	
Torque wrench	

ENGINE HOOD / DOOR

SST

	09812-00010	Door Hinge Set Bolt Wrench	

RECOMMENDED TOOLS

	09042-00010	Torx Socket T30	
	09042-00020	Torx Socket T40	

EQUIPMENT

Protective tape	
MP grease	
Metal saw	
Torque wrench	

SSM

Toyota Genuine Adhesive 1324, Three Bond 1324 or the equivalent	

EXTERIOR

RECOMMENDED TOOLS

	09070-20010	Moulding Remover	

EQUIPMENT

Bamboo scraper	
Cardboard	
Clip remover	
Industrial dryer	
Infrared light	
Non- residue solvent	
Paddle	
Piano wire	
Protective tape	
Sealer gun	
Shop rag or piece of cloth	
Squeegee	
Tape removal disc	
Torque wrench	
Wooden block	

SSM

Toyota Genuine Windshield Glass Adhesive or the equivalent	

INTERIOR

EQUIPMENT

Clip remover	
Double-sided tape	
Protective tape	
Torque wrench	

MULTIPLEX COMMUNICATION

RECOMMENDED TOOLS

	09082-00040	TOYOTA Electrical Tester	
	(09083-00150)	Test Lead Set	

PP

CAN COMMUNICATION

RECOMMENDED TOOLS

	09082-00040	TOYOTA Electrical Tester	
	(09083-00150)	Test Lead Set	

HOW TO DETERMINE NUT STRENGTH

Nut Type

Present Standard Hexagon Nut	Old Standard Hexagon Nut		Class
	Cold Forging Nut	Cutting Processed Nut	
No Mark			4N
No Mark (w/ Washer)	No Mark (w/ Washer)	No Mark	5N (4T)
			6N
		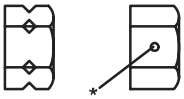	7N (5T)
			8N
		No Mark	10N (7T)
			11N
			12N

HINT:
- *: Nut with 1 or more marks on one side surface of the nut.
- Use the nut with the same number of the nut strength classification or greater than the bolt strength classification number when tightening parts with a bolt and nut.

Example:
- Bolt = 4T
- Nut = 4N or more

SS

STANDARD BOLT

HOW TO DETERMINE BOLT STRENGTH

Bolt Type

Hexagon Head Bolt			Stud Bolt	Weld Bolt	Class
Normal Recess Bolt		Deep Recess Bolt			
4	No Mark	No Mark	No Mark		4T
5					5T
6	w/ Washer	w/ Washer			6T
7					7T
8					8T
9					9T
10					10T
11					11T

SS

SPECIFIED TORQUE FOR STANDARD BOLTS

Class	Diameter (mm)	Pitch (mm)	Specified torque					
			Hexagon head bolt			Hexagon flange bolt		
			N*m	kgf*cm	ft.*lbf	N*m	kgf*cm	ft.*lbf
4T	6	1	5	55	48 in.*lbf	6	60	52 in.*lbf
	8	1.25	12.5	130	9	14	145	10
	10	1.25	26	260	19	29	290	21
	12	1.25	47	480	35	53	540	39
	14	1.5	74	760	55	84	850	61
	16	1.5	115	1,150	83	-	-	-
5T	6	1	6.5	65	56 in.*lbf	7.5	75	65 in.*lbf
	8	1.25	15.5	160	12	17.5	175	13
	10	1.25	32	330	24	36	360	26
	12	1.25	59	600	43	65	670	48
	14	1.5	91	930	67	100	1,050	76
	16	1.5	140	1,400	101	-	-	-
6T	6	1	8	80	69 in.*lbf	9	90	78 in.*lbf
	8	1.25	19	195	14	21	210	15
	10	1.25	39	400	29	44	440	32
	12	1.25	71	730	53	80	810	59
	14	1.5	110	1,100	80	125	1,250	90
	16	1.5	170	1,750	127	-	-	-
7T	6	1	10.5	110	8	12	120	9
	8	1.25	25	260	19	28	290	21
	10	1.25	52	530	38	58	590	43
	12	1.25	95	970	70	105	1,050	76
	14	1.5	145	1,500	108	165	1,700	123
	16	1.5	230	2,300	166	-	-	-
8T	8	1.25	29	300	22	33	330	24
	10	1.25	61	620	45	68	690	50
	12	1.25	110	1,100	80	120	1,250	90
9T	8	1.25	34	340	25	37	380	27
	10	1.25	70	710	51	78	790	57
	12	1.25	125	1,300	94	140	1,450	105
10T	8	1.25	38	390	28	42	430	31
	10	1.25	78	800	58	88	890	64
	12	1.25	140	1,450	105	155	1,600	116
11T	8	1.25	42	430	31	47	480	35
	10	1.25	87	890	64	97	990	72
	12	1.25	155	1,600	116	175	1,800	130

1GR-FE ENGINE CONTROL SYSTEM

SERVICE DATA

Camshaft timing oil control valve assembly	OCV OFF		Standard	Normal engine speed
	OCV ON			Rough idle or engine stalled
Throttle body	Throttle POS value		Standard	60 % or more
	Resistance	1 (M-) - 2 (M+)	Standard	0.3 to 100 Ω at 20°C (68°F)
Accelerator pedal position sensor (ACCEL POS#1)	Voltage	Accelerator pedal released	Standard	0.5 to 1.1 V
		Accelerator pedal depress		2.5 to 4.5 V
Accelerator pedal position sensor (ACCEL POS#2)	Voltage	Accelerator pedal released	Standard	1.2 to 2.0 V
		Accelerator pedal depress		3.4 to 5.0 V
Camshaft timing oil control valve assembly	Resistance	1 (+B) - 2 (GND)	Standard	6.9 to 7.9 Ω at 20°C (68°F)
Mass air flow meter			Standard	0.72 g/sec
Engine coolant temperature sensor	Resistance	1 (E2) - 2 (THW)	Standard	2.32 to 2.59 kΩ at 20°C (68°F)
				0.310 to 0.326 kΩ at 80°C (176°F)
Knock sensor	Resistance	1 (Ground) - 2 (Out put)		120 to 180 kΩ at 20°C (68°F)
Circuit opening relay	Resistance	3 - 5	Standard	10 kΩ or higher
				Below 1 Ω
		1 - 2		Below 1 Ω (Apply battery voltage to terminals 1 and 2)
EFI relay	Resistance	3 - 5	Standard	10 kΩ or higher
				Below 1 Ω (Apply battery voltage to terminals 1 and 2)
Crankshaft position sensor	Resistance	1 - 2	Standard	1,850 to 2,450 Ω at 20°C (68°F)
Fuel pump relay	Resistance	1 - 2	Standard	Below 1 Ω
		3 - 4		Below 1 Ω
		3 - 5		10 kΩ or higher
		3 - 4		10 kΩ or higher (Battery voltage applied to terminal 1 and 2)
		3 - 5		Below 1 Ω (Battery voltage applied to terminal 1 and 2)

TORQUE SPECIFICATIONS

Part Tightened	N*m	kgf*cm	ft.*lbf
Throttle with motor body assembly x Intake air surge tank	11	112	9
Air cleaner assembly x Cylinder head cover sub-assembly	8.0	82	71 in.*lbf
Air cleaner assembly x Intake air surge tank	8.0	82	71 in.*lbf
V-bank cover x Air cleaner assembly	7.5	76	66 in.*lbf
V-bank cover x Intake air surge tank	7.5	76	66 in.*lbf
Knock sensor x Cylinder block sub-assembly	20	204	15
Water outlet pipe No. 1 x Cylinder block sub-assembly	9.0	92	80 in.*lbf
Camshaft timing oil control valve x Cylinder head	9.0	92	80 in.*lbf
E.F.I. engine coolant temperature sensor x Cylinder block	20	204	15
Manifold stay x Exhaust manifold	40	408	30
Manifold stay x Transmission	40	408	30
Cool air inlet No. 1 x Body	12	122	9.0
ECM bracket x ECM	3	32	28 in.*lbf
ECM bracket No. 2 x ECM	3	32	28 in.*lbf
ECM x Body	13	133	10

1GR-FE ENGINE MECHANICAL

SERVICE DATA

Ignition timing		Terminals TC and CG of DLC3 connected	8 to 12° BTDC @ idle (Transmission in neutral position)
		Terminals TC and CG of DLC3 disconnected	7 to 24° BTDC @ idle (Transmission in neutral position)
Idle speed			650 to 750 rpm (Transmission in neutral position)
Compression		Compression pressure	1,300 kPa (13.3 kgf/cm^2, 189 psi) or more
		Minimum pressure	1,000 kPa (10.2 kgf/cm^2, 145 psi)
		Difference between each cylinder	100 kPa (1.0 kgf/cm^2, 15 psi) or less
Valve clearance	Intake	(cold)	0.15 to 0.25 mm (0.006 to 0.010 in.)
	Exhaust		0.29 to 0.39 mm (0.011 to 0.015 in.)
Intake manifold	Intake air surge tank side warpage	Maximum	0.8 mm (0.031 in.)
	Cylinder head side warpage		0.2 mm (0.008 in.)
Exhaust manifold	Warpage	Maximum	0.7 mm (0.028 in.)
Camshaft timing gear assembly	Diameter (with chain)	Large gear	115.5 mm (4.547 in.)
		Small gear	73.1 mm (2.878 in.)
Camshaft timing gear or sprocket	Diameter (with chain)		73.1 mm (2.878 in.)
Crankshaft timing gear or sprocket	Diameter (with chain)		61.0 mm (2.402 in.)
Idle sprocket	Diameter (with chain)		61.0 mm (2.402 in.)
Cylinder head set bolt	Outer diameter	Standard	10.85 to 11.00 mm (0.4272 to 0.4331 in.)
		Minimum	10.7 mm (0.421 in.)
Chain sub-assembly	Length	Maximum	146.8 mm (5.780 in.)
No. 2 chain sub-assembly	Length	Maximum	146.8 mm (5.780 in.)
Idle gear shaft	Diameter		22.987 to 23.000 mm (0.9050 to 0.9055 in.)
	Internal diameter		23.02 to 23.03 mm (0.9063 to 0.9067 in.)
	Oil clearance	Standard	0.020 to 0.043 mm (0.0008 to 0.0017 in.)
		Maximum	0.093 mm (0.0037 in.)
Chain tensioner assembly No. 2	Wear	Maximum	1.0 mm (0.039 in.)
Chain tensioner assembly No. 3	Wear	Maximum	1.0 mm (0.039 in.)
Chain tensioner slipper	Wear	Maximum	1.0 mm (0.039 in.)
Chain vibration damper No. 1	Wear	Maximum	1.0 mm (0.039 in.)
Chain vibration damper No. 2	Wear	Maximum	1.0 mm (0.039 in.)
Cylinder head sub-assembly	Warpage	Maximum	0.10 mm (0.0039 in.)
Intake valve	Valve stem diameter		5.470 to 5.485 mm (0.2154 to 0.2159 in.)
	Valve face angle		45.5°
	Margin thickness	Standard	1.0 mm (0.039 in.)
		Minimum	0.5 mm (0.020 in.)
	Overall length	Standard	106.95 mm (4.2106 in.)
		Minimum	106.70 mm (4.2008 in.)

Exhaust valve	Valve stem diameter			5.465 to 5.480 mm (0.2152 to 0.2158 in.)
	Valve face angle			45.5°
	Margin thickness	Standard		1.0 mm (0.039 in.)
		Minimum		0.5 mm (0.020 in.)
	Overall length	Standard		105.80 mm (41654 in.)
		Minimum		105.55 mm (4.1555 in.)
Inner compression spring	Deviation	Maximum		2.0 mm (0.079 in.)
	Free length	Maximum		47.80 mm (1.8819 in.)
	Tension	at 33.3 mm (1.311 in.)		186.2 to 205.8 N (19.0 to 21.0 kgf, 41.9 to 46.3 lbf)
Intake valve guide bush	Inside diameter			5.51 to 5.53 mm (0.2169 to 0.2177 in.)
	Oil clearance	Standard		0.025 to 0.060 mm (0.0010 to 0.0024 in.)
		Maximum		0.08 mm (0.0031 in.)
	Bore diameter			10.295 to 10.315 mm (0.4053 to 0.4061 in.)
	Protrusion height			9.3 to 9.7 mm (0.366 to 0.382 in.)
Exhaust valve guide bush	Inside diameter			5.51 to 5.53 mm (0.2169 to 0.2177 in.)
	Oil clearance	Standard		0.030 to 0.065 mm (0.0012 to 0.0026 in.)
		Maximum		0.10 mm (0.0039 in.)
	Bore diameter			10.295 to 10.315 mm (0.4053 to 0.4061 in.)
	Protrusion height			9.3 to 9.7 mm (0.366 to 0.382 in.)
Valve lifter	Diameter			30.966 to 30.976 mm (1.2191 to 1.2195 in.)
	Bore diameter			31.009 to 31.025 mm (1.2208 to 1.2215 in.)
	Oil clearance	Standard		0.033 to 0.059 mm (0.0013 to 0.0023 in.)
		Maximum		0.08 mm (0.0031 in.)
No. 1 camshaft	Journal diameter	No. 1 journal		35.971 to 35.985 mm (1.4162 to 1.4167 in.)
		Other journals		22.959 to 22.975 mm (0.9039 to 0.9045 in.)
	Circle runout	Maximum		0.06 mm (0.0024 in.)
	Cam lobe height	Standard		44.168 to 44.268 mm (1.7389 to 1.7428 in.)
		Minimum		44.018 mm (1.7330 in.)
	Oil clearance	No. 1 journal	Standard	0.008 to 0.038 mm (0.0003 to 0.0015 in.)
		Other journals		0.025 to 0.062 mm (0.0010 to 0.0024 in.)
		No. 1 journal	Maximum	0.07 mm (0.0028 in.)
		Other journals		0.10 mm (0.0039 in.)
	Thrust clearance	Standard		0.04 to 0.09 mm (0.016 to 0.035 in.)
		Maximum		0.11 mm (0.0043 in.)
No. 2 camshaft	Journal diameter	No. 1 journal		35.971 to 35.985 mm (1.4162 to 1.4167 in.)
		Other journals		22.959 to 22.975 mm (0.9039 to 0.9045 in.)
	Circle runout	Maximum		0.06 mm (0.0024 in.)
	Cam lobe height	Standard		44.580 to 44.680 mm (1.7551 to 1.7591 in.)
		Minimum		44.430 mm (1.7492 in.)
	Oil clearance	No. 1 journal	Standard	0.040 to 0.079 mm (0.0016 to 0.0031 in.)
		Other journals		0.025 to 0.062 mm (0.0010 to 0.0024 in.)
		Maximum		0.10 mm (0.0039 in.)
	Thrust clearance	Standard		0.04 to 0.09 mm (0.016 to 0.035 in.)
		Maximum		0.11 mm (0.0043 in.)

No. 3 camshaft sub-assembly	Journal diameter		No. 1 journal	35.971 to 35.985 mm (1.4162 to 1.4167 in.)
			Other journals	22.959 to 22.975 mm (0.9039 to 0.9045 in.)
	Circle runout		Maximum	0.06 mm (0.0024 in.)
	Cam lobe height		Standard	44.168 to 44.268 mm (1.7389 to 1.7428 in.)
			Minimum	44.018 mm (1.7330 in.)
	Oil clearance	No. 1 journal	Standard	0.008 to 0.038 mm (0.0003 to 0.0015 in.)
			Other journals	0.025 to 0.062 mm (0.0010 to 0.0024 in.)
			Maximum	0.10 mm (0.0039 in.)
	Thrust clearance		Standard	0.04 to 0.09 mm (0.016 to 0.035 in.)
			Maximum	0.11 mm (0.0043 in.)
No. 4 camshaft sub-assembly	Journal diameter		No. 1 journal	35.971 to 35.985 mm (1.4162 to 1.4167 in.)
			Other journals	22.959 to 22.975 mm (0.9039 to 0.9045 in.)
	Circle runout		Maximum	0.06 mm (0.0024 in.)
	Cam lobe height		Standard	44.580 to 44.680 mm (1.7551 to 1.7591 in.)
			Minimum	44.430 mm (1.7492 in.)
	Oil clearance	No. 1 journal	Standard	0.040 to 0.079 mm (0.0016 to 0.0031 in.)
			Other journals	0.025 to 0.062 mm (0.0010 to 0.0024 in.)
			Maximum	0.10 mm (0.0039 in.)
	Thrust clearance		Standard	0.04 to 0.09 mm (0.016 to 0.035 in.)
			Maximum	0.11 mm (0.0043 in.)
Ring pin for cylinder head sub-assembly and cylinder head LH	Protrusion height			2.7 to 3.3 mm (0.106 to 0.130 in.)
Straight pin for cylinder head sub-assembly and cylinder head LH	Protrusion height		A	17.5 to 19.5 mm (0.689 to 0.768 in.)
			B	7.5 to 8.5 mm (0.295 to 0.335 in.)
			C	7.0 to 9.0 mm (0.276 to 0.354 in.)
Tight plug for cylinder head sub-assembly and cylinder head LH	Depth			1.5 mm (0.059 in.)
Connecting rod	Thrust clearance		Standard	0.15 to 0.30 mm (0.0059 to 0.0118 in.)
			Maximum	0.35 mm (0.0138 in.)
	Oil clearance		Standard	0.026 to 0.046 mm (0.0010 to 0.0018 in.)
			Maximum	0.066 mm (0.0025 in.)
Crankshaft thrust clearance			Standard	0.04 to 0.24 mm (0.0016 to 0.0094 in.)
			Maximum	0.30 mm (0.0118 in.)
Cylinder block warpage			Maximum	0.05 mm (0.0020 in.)
Cylinder bore diameter			Standard	94.000 to 94.012 mm (3.7008 to 3.7013 in.)
			Maximum	94.132 mm (3.7060 in.)
Piston	Diameter			93.910 to 93.940 mm (3.6972 to 3.6984 in.)
	Oil clearance		Standard	0.060 to 0.102 mm (0.0031 to 0.0040 in.)
			Maximum	0.13 mm (0.0051 in.)
Connecting rod out-of alignment			Maximum	0.05 mm (0.0020 in.) per 100 mm (3.94 in.)
Connecting rod twist			Maximum	0.15 mm (0.0059 in.) per 100 mm (3.94 in.)
Connecting rod bushing	Internal diameter			22.005 to 22.014 mm (0.8662 to 0.8665 in.)
Piston pin	Diameter			21.997 to 22.006 mm (0.8660 to 0.8664 in.)
Oil clearance			Standard	0.005 to 0.011 mm (0.0002 to 0.0004 in.)
			Maximum	0.050 mm (0.0020 in.)
Piston ring	Groove clearance		No. 1	0.02 to 0.07 mm (0.0008 to 0.0028 in.)
			No. 2	0.02 to 0.06 mm (0.0008 to 0.0024 in.)
			Oil	0.07 to 0.15 mm (0.0028 to 0.0060 in.)

Piston pin	Internal diameter			22.001 to 22.010 mm (0.8662 to 0.8665 in.)
Piston ring	End gap	No. 1	Standard	0.30 to 0.40 mm (0.0118 to 0.0157 in.)
		No. 2		0.40 to 0.50 mm (0.0157 to 0.0197 in.)
		Oil (Side rail)		0.10 to 0.40 mm (0.0039 to 0.0157 in.)
		No. 1	Maximum	1.0 mm (0.039 in.)
		No. 2		1.1 mm (0.043 in.)
		Oil (Side rail)		1.0 mm (0.039 in.)
Connecting rod bolt	Diameter	Standard		7.2 to 7.3 mm (0.283 to 0.287 in.)
		Minimum		7.0 mm (0.276 in.)
	Thrust clearance	Standard		0.15 to 0.30 mm (0.0059 to 0.0118 in.)
		Minimum		0.35 mm (0.0138 in.)
Crankshaft bearing cap set bolt	Diameter	Standard		10.0 to 10.2 mm (0.393 to 0.402 in.)
Crankshaft	Circle runout	Maximum		0.06 mm (0.0024 in.)
Main journal	Diameter			71.988 to 72.000 mm (2.8342 to 2.8346 in.)
Main journal	Taper and out-of-round	Maximum		0.02 mm (0.0008 in.)
Crank pin	Diameter			55.992 to 56.000 mm (2.2044 to 2.2047 in.)
Crank pin	Taper and out-of-round	Maximum		0.02 mm (0.0008 in.)
Crankshaft	Oil clearance	Standard		0.018 to 0.030 mm (0.0007 to 0.0012 in.)
		Maximum		0.046 mm (0.0018 in.)
	Thrust clearance			0.04 to 0.24 mm (0.0016 to 0.0094 in.)
		Maximum		0.30 mm (0.0018 in.)
Straight pin	Protrusion	Pin A	Standard	22.5 to 23.5 mm (0.886 to 0.925 in.)
		Pin B		10.5 to 11.5 mm (0.413 to 0.453 in.)
		Pin C		8.5 to 9.5 mm (0.335 to 0.374 in.)
		Pin D		5.5 to 6.5 mm (0.217 to 0.256 in.)

TORQUE SPECIFICATIONS

Part Tightened		N*m	kgf*cm	ft.*lbf
No. 1 Engine under cover sub-assembly x Frame assembly		29	296	21
Camshaft bearing cap x Cylinder head sub-assembly	10 mm (0.39 in.) head	9.0	92	80 in.*lbf
	12 mm (0.47 in.) head	24	245	18
No. 1 chain tensioner x Cylinder head sub-assembly		10	102	7
No. 2 chain tensioner x Cylinder head sub-assembly		19	194	14
No. 3 chain tensioner x Cylinder head sub-assembly		19	194	14
Camshaft timing gear assembly x Camshaft		100	1,020	74
Camshaft timing gear or sprocket x Camshaft		100	1,020	74
Timing chain cover plate x Timing chain or belt cover sub-assembly		9.0	92	80 in.*lbf
Ignition coil assembly x Cylinder head cover sub-assembly		10	102	7
V-bank cover x Intake air surge tank		7.5	76	66 in.*lbf
Engine hanger No. 1 x Cylinder head sub-assembly RH		33	336	24
Engine hanger No. 2 x Cylinder head sub-assembly LH		33	336	24
Spark plug x Cylinder head sub-assembly		20	204	15
Oil filler cap housing x Cylinder head cover sub-assembly LH		9.0	92	80 in.*lbf
Camshaft timing oil control valve assembly x Cylinder head cover sub-assembly		9.0	92	80 in.*lbf
Oil filter bracket sub-assembly x Timing chain or belt cover sub-assembly		19	194	14
No. 1 engine mounting bracket front RH x Cylinder block sub-assembly		43	435	31
No. 1 engine mounting bracket front LH x Cylinder block sub-assembly		43	435	31
No. 1 engine mounting insulator front RH x Frame assembly		38	387	28
No. 1 engine mounting insulator front LH x Frame assembly		38	387	28
Engine wire No. 2 (ground cable) x Cylinder block sub-assembly		13	133	9
Hood sub-assembly x Hood hinge assembly RH and LH		18	184	13
Knock sensor x Cylinder block sub-assembly		20	204	15
No. 1 water outlet pipe x Cylinder block sub-assembly		10	102	7
Cylinder head sub-assembly RH x Cylinder block sub-assembly	1st	36	367	27
	2nd	Turn 180°	Turn 180°	Turn 180°
Cylinder head sub-assembly LH x Cylinder block sub-assembly	Recessed head 1st	36	367	27
	2nd	Turn 180°	Turn 180°	Turn 180°
	14 mm (0.55 in.) head	30	306	22
No. 1 chain vibration damper x Cylinder block sub-assembly		19	194	14
No. 1 idle gear x Cylinder block sub-assembly		60	612	44
Timing chain or belt cover sub-assembly x Cylinder head and block		23	235	17
Water pump assembly x Timing chain or belt cover sub-assembly	Bolt A	9.0	92	80 in.*lbf
	Bolt B	23	235	17
Oil pan stud bolt x Oil pan sub-assembly		4.0	41	35 in.*lbf
Oil pan sub-assembly x Cylinder block and timing chain or belt cover	10 mm (0.39 in.) head	10	102	7
	12 mm (0.47 in.) head	21	214	16
Oil strainer sub-assembly x Oil pan sub-assembly		9.0	92	80 in.*lbf

Part Tightened		N*m	kgf*cm	ft.*lbf
No. 2 oil pan sub-assembly x Oil pan sub-assembly	Nut	1.0	102	7
	Bolt	9.0	92	80 in.*lbf
Oil pan drain plug x No. 2 oil pan sub-assembly		40	408	30
Crankshaft pulley x Crankshaft		250	2,549	185
Cylinder head cover sub-assembly x Cylinder head sub-assembly RH	Nut	9.0	92	80 in.*lbf
	Bolt A	10	102	7
	Bolt B	9.0	92	80 in.*lbf
Cylinder head cover sub-assembly LH x Cylinder head sub-assembly LH	Nut	9.0	92	80 in.*lbf
	Bolt A	10	102	7
	Bolt B	9.0	92	80 in.*lbf
Ventilation valve x Cylinder head cover sub-assembly LH		27	275	20
Oil control valve filter plug x Cylinder head sub-assembly		62	632	46
Crankshaft position sensor x Cylinder block sub-assembly		10	102	7.4
VVT sensor x Timing chain or belt cover sub-assembly		8.0	82	71 in.*lbf
Cylinder block water drain cock sub-assembly x Cylinder block sub-assembly		25	255	18
Oil level gauge guide x Cylinder head sub-assembly		9.0	92	80 in.*lbf
Oil pan sub-assembly x Transmission		37	377	27
No. 1 idler pulley sub-assembly x Timing chain or belt cover sub-assembly		54	551	40
No. 2 idler pulley sub-assembly x Timing chain or belt cover sub-assembly		39	398	29
V-ribbed belt tensioner assembly x Cylinder block sub-assembly		36	367	27
Vane pump assembly x Cylinder block sub-assembly		43	438	32
Intake air surge tank x Intake manifold		28	286	21
Surge tank stay x Intake air surge tank and cylinder head		21	214	15
Throttle body bracket x Throttle body with motor and cylinder head		21	214	15
Oil baffle plate x Surge tank stay No. 1		9.0	92	80 in.*lbf
Ground cable x Cylinder head sub-assembly		8.0	82	71 in.*lbf
Water by-pass joint RR x Cylinder head sub-assembly		9.0	92	80 in.*lbf
Intake manifold x Cylinder head sub-assembly		26	265	19
Exhaust manifold sub-assembly RH x Cylinder head sub-assembly RH		30	306	22
Exhaust manifold sub-assembly LH x Cylinder head sub-assembly LH		30	306	22
Manifold stay x Exhaust manifold sub-assembly RH and transmission		40	408	30
No. 2 manifold stay x Exhaust manifold sub-assembly LH and transmission		40	408	30
No. 1 cool air inlet x Body		12	122	9
Drive plate and ring gear sub-assembly x Crankshaft		83	846	61
Flywheel x Crankshaft		83	846	61
Stud bolt x Cylinder head sub-assembly and cylinder head LH	A	4.0	41	35 in.*lbf
	B	9.0	92	80 in.*lbf
	C	4.0	41	35 in.*lbf
Union x Cylinder head sub-assembly and cylinder head LH		15	150	11
With Head taper screw plug x Cylinder head sub-assembly and cylinder head LH		80	816	59
Connecting rod cap x Connecting rod	1st	25	250	18
	2nd	Turn 90°	urn 90°	urn 90°
Main bearing cap x Cylinder block sub-assembly	12 pointed head 1st	61	622	45
	2nd	urn 90°	urn 90°	urn 90°
	12 mm head	25	255	18

SS

Part Tightened		N*m	kgf*cm	ft.*lbf
Stud bolt x Cylinder block sub-assembly	A	11	112	8.1
	B	4.5	46	40 in.*lbf
	C	4.0	41	35 in.*lbf
	D	4.0	41	35 in.*lbf
No. 1 sub-assembly oil nozzle x Cylinder block sub-assembly		9.0	92	80 in.*lbf
Negative battery terminal		3.9	40	35 in.*lbf
Exhaust front pipe x Exhaust manifold		54	554	40
Exhaust center pipe x Exhaust front		43	438	32
No. 2 front exhaust pipe x Exhaust manifold	Nut	54	554	40
	Bolt	48	489	35
Exhaust pipe stopper bracket x Frame assembly		19	193	14
Ground wire x Body		8.4	85	74 in.*lbf
Rear engine oil seal retainer x Cylinder block sub-assembly	Nut	9.0	92	80 in.*lbf
	Bolt	10	102	7.4
Water inlet x Cylinder head sub-assembly		9.0	92	80 in.*lbf
Thermostat water inlet sub-assembly x Water inlet		9.0	92	80 in.*lbf
Engine oil pressure switch x Oil filter bracket sub-assembly		15	153	11
Oil filter union x Oil filter bracket		30	306	22
Oil filter sub-assembly x Oil filter bracket		18	184	13
Water temperature sensor x Water by-pass joint RR		20	200	14

1GR-FE FUEL

SERVICE DATA

Fuel pressure			281 to 287 kPa (2.87 to 2.93 kgf*cm^2, 40.8 to 41.7 psi)
Fuel pressure			147 kPa (1.5 kgf*cm^2, 21 psi) or more
Fuel injector	Resistance	at 20°C (68°F)	11.6 to 12.4 Ω
	Injection volume		76 to 91 cm^2 (4.6 to 5.5 cu in.) per 15 seconds
	Difference between each cylinder		15 cm^3 (0.9 cu in.) or less
	Fuel leakage		1 drop or less every 12 minutes
Fuel pump resister	Resistance	at 20°C (68°F)	0.941 to 0.999 Ω
Fuel Pump	Resistance	at 20°C (68°F)	0.2 to 3.0 Ω

TORQUE SPECIFICATIONS

Part Tightened	N*m	kgf*cm	ft.*lbf
Fuel tank band x Body	40	408	30
No. 1 fuel tank protector sub-assembly x Fuel tank band	20	204	15
Fuel tank protector bracket x Body	5.5	56	49 in.*lbf
Fuel delivery pipe sub-assembly x Intake manifold	15	153	11
Intake air surge tank x Intake manifold	28	286	21
Intake air surge tank x Throttle body bracket	21	214	16
Intake air surge tank x No. 1 surge tank stay	21	214	16
Intake air surge tank x No. 2 surge tank stay	21	214	16
Fuel pressure regulator assembly x Fuel delivery pipe sub-assembly	9.0	92	80 in.*lbf
Negative battery terminal	3.9	40	35 in.*lbf
No. 1 surge tank stay x Oil baffle plate	9.0	92	80 in.*lbf
Fuel pump resister x Body	8.5	87	75 in.*lbf
No. 3 fuel tank protector x Fuel tank	5.0	51	44 in.*lbf

1GR-FE EMISSION CONTROL

SERVICE DATA

Air-fuel ratio compensation system	Voltage	Standard	B2 - B22 (A1A+) - B3 - 1 (E1)	3.3 V
			B2 - 23 (A2A+) - B3 - 1 (E1)	3.3 V
			B2 - 22 (A1A-) - B3 - (E1)	2.9 V
			B2 - 31 (A2A-) - B3 - (E1)	2.9 V
Fuel cut off rpm	Cut off			2,500 rpm
	Return			1,200 rpm
Lead detection pump	Voltage	Standard	A23 (VC) - A28 (E2)	4.5 to 5.5 V
			E22 (PPMP) - A28 (E2)	1.425 to 4.150 V
vacuum Switching Valve	Resistance	Standard	1 - Body	10 MΩ or higher at 20°C (68°F)
			2 - Body	10 MΩ or higher at 20°C (68°F)
Air fuel ratio sensor (Bank 1, Bank 2)	Resistance	Standard	1 (HT) - 2 (+B)	1.8 to 3.4 Ω at 20°C (68°F)
			1 (HT) - 4 (E1)	10 kΩ or higher
Heated oxygen sensor No. 2 (Bank 1, Bank 2)	Resistance	Standard	1 (HT) - 2 (+B)	11 to 16 Ω at 20°C (68°F)
			1 (HT) - 4 (E1)	10 kΩ or higher

TORQUE SPECIFICATIONS

Part Tightened	N*m	kgf*cm	ft.*lbf
Duty vacuum switching valve x Intake air surge tank	9.0	92	80 in.*lbf
Ventilation valve x Cylinder head cover	27	275	20
Heated oxygen sensor x Exhaust pipe	44	449	33
Air fuel ratio sensor x Exhaust manifold	44	449	33
Negative battery terminal	3.9	40	35 in.*lbf
Charcoal canister x Body	20	204	15

1GR-FE INTAKE

SERVICE DATA

No. 1 vacuum switching valve assembly	Resistance	Standard	1 - 2	33 to 39 Ω at 20°C (68°F)
			1 - Body	10 kΩ or higher
			2 - Body	10 kΩ or higher

TORQUE SPECIFICATIONS

Part Tightened	N*m	kgf*cm	ft.*lbf
No. 1 vacuum switching valve assembly x Intake air surge tunk	9.0	92	80 in.*lbf
V-bank cover x Air cleaner assembly	7.5	76	66 in.*lbf
Air cleaner assembly x Intake air surge tunk	8.0	82	71 in.*lbf
Negative battery terminal	3.9	40	35 in.*lbf

1GR-FE EXHAUST

SERVICE DATA

Compression spring	Length	Minimum	40.5 mm (1.594 in.)

TORQUE SPECIFICATIONS

Part Tightened		N*m	kgf*cm	ft.*lbf
Exhaust pipe assembly front x Exhaust manifold		54	554	40
Exhaust front pipe assembly No. 2 x Exhaust pipe assembly center	Bolt	48	489	35
	Nut	54	554	40
Exhaust pipe assembly center x Tail pipe		48	490	35
Heated oxygen sensor x Exhaust pipe assembly front		43	438	32
Heated oxygen sensor x Exhaust front pipe assembly No. 2		43	438	32
Negative battery terminal		3.9	40	35 in.*lbf
Exhaust pipe stopper bracket x Body		19	193	14

1GR-FE COOLING

SERVICE DATA

Water inlet with thermostat	Valve opening temperature		80 to 84 °C (176 to 183 °F)
	Valve lift		8 mm (0.31 in.) or more at 95 °C (203 °F)
Radiator cap	Relief valve opening pressure	Standard	93 to 123 kPa (0.95 to 1.25 kgf/cm^2, 13.5 to 17.8 psi)
		Minimum	78 kPa (0.8 kgf/cm^2, 11.4 psi)

TORQUE SPECIFICATIONS

Part Tightened		N*m	kgf*cm	ft.*lbf
Cylinder block water drain cock plug x Cylinder block water drain cock		13	130	9
Water pump assembly x Timing chain or belt cover sub-assembly	Bolt A	9.0	92	80 in.*lbf
	Bolt B	23	235	17
Idler pulley sub-assembly No. 2 x Timing chain or belt cover sub-assembly		39	398	29
Water inlet x Timing chain or belt cover sub-assembly		9.0	92	80 in.*lbf
Fan shroud x Radiator		5.0	51	44 in.*lbf
Fan x Fluid coupling		9.0	92	80 in.*lbf
Fan with fluid coupling x Water pump		21	214	15
Reserve tank x Radiator		5.0	51	44 in.*lbf
V-bank cover x Intake air surge tank		7.5	76	66 in.*lbf
Engine under cover sub-assembly No. 1 x Frame assembly		29	296	21
Water inlet with thermostat x Water inlet		9.0	92	80 in.*lbf
Radiator x Radiator support		21	184	44
Negative battery terminal		3.9	40	35 in.*lbf

1GR-FE LUBRICATION

SERVICE DATA

Oil pressure		at idle speed	29 kPa (0.3 kgf/cm^2, 4.2 psi) or more
		at 3,000 rpm	294 to 588 kPa (3.0 to 6.0 kgf/cm^2, 43 to 85 psi)
Oil pump	Tip clearance	Standard	0.06 to 0.16 mm (0.0024 to 0.0063 in.)
		Maximum	0.16 mm (0.0063 in.)
	Side clearance	Standard	0.03 to 0.09 mm (0.0012 to 0.0035 in.)
		Maximum	0.09 mm (0.0035 in.)
	Body clearance	Standard	0.250 to 0.325 mm (0.0098 to 0.0128 in.)
		Maximum	0.325 mm (0.0128 in.)

TORQUE SPECIFICATIONS

Part Tightened	N*m	kgf*cm	ft.*lbf
Oil pressure switch x Oil filter bracket sub-assembly	15	153	11
Oil pan drain plug x Oil pan sub-assembly No. 2	40	408	30
Timing chain or belt cover sub-assembly x Cylinder head and block	23	235	17
Oil filter bracket sub-assembly x Timing chain or belt cover sub-assembly	19	194	14
V-bank cover x Intake air surge tank	7.5	76	66 in.*lbf
Oil pump relief valve x Oil pump cover	49	500	36
Oil pump cover x Timing chain or belt cover sub-assembly	9.0	92	80 in.*lbf
Oil cooler assembly x Oil filter bracket sub-assembly	68	693	50
Oil filter sub-assembly	18	184	13

1GR-FE IGNITION

SERVICE DATA

Spark plug	Recommended spark plug	DENSO mad	K20HR-U11
		NGK made	LFR6C-11
	Electrode gap		1.0 to 1.1 mm (0.039 to 0.043 in.)
	Maximum electrode gap		1.46 mm (0.057 in.)
Crankshaft position sensor	Resistance	at 20°C (68°F)	1,850 to 2,450 Ω

TORQUE SPECIFICATIONS

Part Tightened	N*m	kgf*cm	ft.*lbf
Ignition coil x Cylinder head cover	10	102	7.4
V-bank cover x Intake air surge tank sub-assembly and Air cleaner assembly	7.5	76	66 in.*lbf
Negative battery terminal	3.9	40	35 in.*lbf

1GR-FE STARTING

SERVICE DATA

Starter	Current		Standard	100A or less at 11.5 V
Starter armature assembly	Circle runout		Maximum	0.05 mm (0.0020 in.)
	Commutator diameter		Standard	35.0 mm (1.378 in.)
			Minimum	34.0 mm (1.339 in.)
	Undercut depth		Standard	0.7 mm (0.028 in.)
			Minimum	0.2 mm (0.008 in.)
	Commutator resistance		Standard	Below 1 Ω
Starter yoke	Resistance	Standard	Lead wire-brush	Below 1 Ω
	Shunt coil resistance		Terminal A - B	1.5 to 1.9 Ω at 20°C (68°F)
Brush	Length		Standard	15.0 mm (0.591 in.)
			Minimum	9.0 mm (0.354 in.)
Starter brush holder assembly	Brush spring lead		Standard	21.5 to 27.5 N (2.2 to 2.8 kgf, 4.8 to 6.2 lbf)
			Minimum	12.7 N (1.3 kgf, 2.9 lbf)
Starter relay assembly	Resistance	Standard	3 - 5	10 kΩ or higher
				Below 1 Ω (apply battery voltage to terminal 1 and 2)
Ignition switch assembly	Resistance	Standard		10 kΩ or higher (Lock)
			1 (AM1) - 3 (ACC)	Below 1 Ω (ACC)
			1 (AM1) - 3 (ACC) - 4 (IG1)	Below 1 Ω (ON)
			7 (IG2) - 8 (AM2)	Below 1 Ω (ON)
			1 (AM1) - 2 (ST1) - 4 (IG1)	Below 1 Ω (START)
			6 (ST2) - 7 (IG2) - 8 (AM2)	Below 1 Ω (START)

SS

TORQUE SPECIFICATIONS

Part Tightened	N*m	kgf*cm	ft.*lbf
Starter assembly x Transmission housing	37	377	27
Starter assembly x Terminal 30	5.9	60	52
Commutator end frame x Brush holder	3.8	39	34 in.*lbf
Starter drive housing assembly x Magnetic Starter Switch	9.3	95	82 in.*lbf
Commutator end frame x Starter drive housing assembly	9.3	95	82 in.*lbf
Lead wire x Terminal C of starter	5.9	60	52 in.*lbf
Engine wire x Cylinder block	13	133	10
No. 2 exhaust manifold stay x Transmission housing and Exhaust manifold	3.9	40	35 in.*lbf
Wire harness x Cylinder block	13	133	10

1GR-FE CHARGING

SERVICE DATA

Battery	Voltage		Standard	12.6 to 12.9 V at 20°C (68°F)
Charging circuit without load	Amperage			10A or less
	Voltage			13.2 to 14.8 V
Generator (DENSO made)	Generator brush holder assembly	Brush length	Standard	10.5 mm (0.413 in.)
			Minimum	4.5 mm (0.177 in.)
	Generator rotor assembly	Resistance	Standard	2.3 to 2.7 Ω at 20°C (68°F)
		Slip ring diameter	Standard	14.2 to 14.4 mm (0.559 to 0.567 in.)
			Minimum	14.0 mm (0.551 in.)

SS

TORQUE SPECIFICATIONS

Part Tightened	N*m	kgf*cm	ft.*lbf
Generator assembly x V-ribbed belt tensioner and cylinder head	43	438	32
Generator assembly x Wire harness clamp bracket	8.0	82	71 in.*lbf
Generator assembly x Terminal B	10	100	7
Wire harness stay x Body	5.8	59	51 in.*lbf
V-bank cover x Intake air surge tank sub-assembly and Air cleaner assembly	7.5	76	66 in.*lbf
Engine under cover sub-assembly No. 1 x Frame assembly	29	296	21
Retainer plate x Drive end frame assembly generator (Denso made)	26	27	23 in.*lbf
Generator coil assembly x Drive frame assembly generator (Denso made)	5.8	59	51 in.*lbf
Generator brush holder assembly x Generator coil assembly (Denso made)	1.8	18	16 in.*lbf
Generator rear end cover x Generator coil assembly (Denso made)	4.6	47	41 in.*lbf
Generator pulley x Generator rotor assembly (Denso made)	111	1,125	81

A750E AUTOMATIC TRANSMISSION

SERVICE DATA

Line pressure Engine idling	D position	356 to 426 kPa (3.6 to 4.3 kgf*cm^2, 52 to 62 psi)
	R position	500 to 600 kPa (5.1 to 6.1 kgf*cm^2, 73 to 87 psi)
Line pressure AT stall (Throttle valve fully opened)	D position	1,367 to 1,477 kPa (14.0 to 15.1 kgf*cm^2, 198 to 214 psi)
	R position	1,278 to 1,506 kPa (13.0 to 15.4 kgf*cm^2, 185 to 218 psi)
Engine stall revolution	D positions	2,250 to 2,550 rpm
Time lag	N → D position	Less than 1.2 seconds
	N → R position	Less than 1.5 seconds
Engine idle speed (A/C OFF)	N position	650 to 750 rpm
Drive plate runout	Max.	0.20 mm (0.0079 in.)
Torque converter runout	Max.	0.30 mm (0.0118 in.)
Torque converter clutch installation distance		23.28 mm (0.9166 in.) or more
Shift schedule		
D position		
(Throttle valve fully opened)	1 → 2	32 to 40 mph (52 to 64 km/h)
	2 → 3	60 to 67 mph (97 to 108 km/h)
	3 → 4	89 to 97 mph (143 to 156 km/h)
	4 → 5	116 to 125 mph (187 to 201 km/h)
	5 → 4	111 to 119 mph (179 to 191 km/h)
	4 → 3	81 to 88 mph (130 to 141 km/h)
	3 → 2	54 to 58 mph (87 to 94 km/h)
	2 → 1	25 to 29 mph (41 to 46 km/h)
(Throttle valve fully closed)	4 → 5	30 to 34 mph (48 to 54 km/h)
	5 → 4	18 to 21 mph (29 to 34 km/h)
4 position		
(Throttle valve fully opened)	1 → 2	32 to 40 mph (52 to 64 km/h)
	2 → 3	60 to 67 mph (97 to 108 km/h)
	3 → 4	89 to 97 mph (143 to 156 km/h)
	5 → 4	124 to 132 mph (200 to 213 km/h)
	4 → 3	81 to 88 mph (130 to 141 km/h)
	3 → 2	54 to 58 mph (87 to 94 km/h)
	2 → 1	25 to 29 mph (41 to 46 km/h)
3 position		
(Throttle valve fully opened)	1 → 2	32 to 40 mph (52 to 64 km/h)
	2 → 3	60 to 67 mph (97 to 108 km/h)
	4 → 3	87 to 94 mph (140 to 151 km/h)
	3 → 2	54 to 58 mph (87 to 94 km/h)
	2 → 1	25 to 29 mph (41 to 46 km/h)
2 position		
(Throttle valve fully opened)	1 → 2	32 to 40 mph (52 to 64 km/h)
	3 → 2	58 to 64 mph (93 to 103 km/h)
	2 → 1	25 to 29 mph (41 to 46 km/h)
L position		
(Throttle valve fully opened)	2 → 1	25 to 29 mph (41 to 46 km/h)

Lock-up point Throttle valve opening 5%		
D position 5th gear	Lock-up ON	47 to 51 mph (75 to 82 km/h)
	Lock-up OFF	42 to 46 mph (68 to 74 km/h)
4 position 4th gear	Lock-up ON	45 to 48 mph (72 to 78 km/h)
	Lock-up OFF	40 to 43 mph (64 to 70 km/h)

AUTOMATIC TRANSMISSION UNIT

SS

1st and reverse return spring free length	Standard: 23.74 mm (0.9347 in.)
Rear planetary gear pinion thrust clearance	Standard: 0.2 to 0.6 mm (0.008 to 0.024 in.)
Rear planetary gear bushing inside diameter	Standard: 20.075 mm (0.7904 in.)
1st and reverse brake pack clearance	0.8 to 1.1 mm (0.031 to 0.043 in.)
Flange thickness (1st and reverse brake)	Mark 0: 0 mm (0 in.) Mark 2: 0.2 mm (0.008 in.) Mark 4: 0.4 mm (0.016 in.) Mark 6: 0.6 mm (0.024 in.) Mark 8: 0.8 mm (0.031 in.) Mark 10: 1.0 mm (0.039 in.) Mark 12: 1.2 mm (0.047 in.) Mark 14: 1.4 mm (0.055 in.)
Intermediate shaft run out	Standard: 0.08 mm (0.003 in.)
Intermediate shaft diameter	Standard A: 25.962 to 25.975 mm (1.022 to 1.023 in.) Standard B: 25.962 to 25.975 mm (1.022 to 1.023 in.) Standard C: 32.062 to 32.075 mm (1.262 to 1.263 in.) Standard D: 32.062 to 32.075 mm (1.262 to 1.263 in.)
Rear planetary ring gear flange bushing inside diameter	Standard: 32.18 mm (1.2667 in.)
Center planetary gear pinion thrust clearance	Standard: 0.12 to 0.68 mm (0.005 to 0.027 in.)
Brake piston return spring No.2 free length	Standard: 17.45 mm (0.687 in.)
Brake piston return spring free length	Standard: 17.05 mm (0.671 in.)
Front planetary gear pinion thrust clearance	Standard: 0.20 to 0.60 mm (0.008 to 0.024 in.)
Front planetary gear bushing inside diameter	Standard: 57.48 mm (2.263 in.)
Brake piston No.1 piston stroke	0.42 to 0.72 mm (0.017 to 0.028 in.)
Flange thickness (brake piston No.1)	Mark 0: 2.0 mm (0.079 in.) Mark 1: 2.2 mm (0.087 in.) Mark 2: 2.4 mm (0.094 in.) Mark 3: 2.6 mm (0.102 in.)
Brake piston return spring No.3 free length	Standard: 15.72 mm (0.619 in.)
Snap ring and race clearance	0.05 to 0.33 mm (0.002 to 0.013 in.)
Flange thickness	No. 1: 3.7 mm (0.146 in.)
	No. 2: 3.8 mm (0.150 in.)
	No. 3: 3.9 mm (0.154 in.)
	No. 4: 4.0 mm (0.158 in.)
	No. 5: 4.1 mm (0.161 in.)
	No. 6: 4.2 mm (0.165 in.)

OIL PUMP

Body clearance	Standard: 0.10 to 0.17 mm (0.0039 to 0.0067 in.)
	Maximum: 0.17 mm (0.0067 in.)
Tip clearance	Standard: 0.07 to 0.15 mm (0.0028 to 0.0059 in.)
	Maximum: 0.15 mm (0.0059 in.)
Side clearance	Standard: 0.02 to 0.05 mm (0.0008 to 0.0020 in.)
	Maximum: 0.05 mm (0.0020 in.)

Drive and driven gear thickness	Mark 0: 10.740 to 10.749 mm (0.4228 to 0.4232 in.)
	Mark 1: 10.750 to 10.759 mm (0.4232 to 0.4236 in.)
	Mark 2: 10.760 to 10.769 mm (0.4236 to 0.4240 in.)
	Mark 3: 10.770 to 10.779 mm (0.4240 to 0.4244 in.)
	Mark 4: 10.780 to 10.789 mm (0.4244 to 0.4248 in.)
Starter shaft bushing inside diameter	Standard (Front side): 21.577 mm (0.850 in.)
	Standard (Rear side): 32.08 mm (1.263 in.)
Front oil pump body inside diameter	38.188 mm (1.504 in.)

CLUTCH DRUM AND INPUT SHAFT

Direct clutch	
Pack clearance	0.50 to 0.80 mm (0.020 to 0.032 in.)
Clutch piston return spring free length	Standard: 19.51 mm (0.768 in.)
Flange thickness	No. 0: 3.0 mm (0.118 in.)
	No. 1: 3.1 mm (0.122 in.)
	No. 2: 3.2 mm (0.126 in.)
	No. 3: 3.3 mm (0.130 in.)
	No. 4: 3.4 mm (0.134 in.)
	No. 5: 3.5 mm (0.138 in.)
	No. 6: 3.6 mm (0.142 in.)
	No. 7: 3.7 mm (0.146 in.)
	No. 8: 3.8 mm (0.150 in.)
Reverse clutch	
Reverse clutch hub busing inside diameter	Standard: 35.812 to 35.837 mm (1.4099 to 1.4109 in.)
	Maximum: 35.887 mm (1.4129 in.)
Pack clearance	0.50 to 0.80 mm (0.020 to 0.032 in.)
Clutch piston return spring free length	Standard: 21.04 mm (0.828 in.)
Flange thickness	No. 0: 2.8 mm (0.110 in.)
	No. 1: 2.9 mm (0.114 in.)
	No. 2: 3.0 mm (0.118 in.)
	No. 3: 3.1 mm (0.122 in.)
	No. 4: 3.2 mm (0.126 in.)
	No. 5: 3.3 mm (0.130 in.)
	No. 6: 3.4 mm (0.134 in.)
	No. 7: 3.5 mm (0.138 in.)
	No. 8: 3.6 mm (0.142 in.)
	No. 9: 3.7 mm (0.146 in.)
	No. A: 3.8 mm (0.150 in.)
Froward clutch	
Forward clutch hub bushing inside diameter	Standard: 26.037 to 26.062 mm (1.0251 to 1.0261 in.)
	Maximum: 26.112 mm (1.028 in.)
Pack clearance	0.60 to 0.90 mm (0.024 to 0.035 in.)
Clutch piston return spring free length	Standard: 26.74 mm (1.053 in.)

Flange thickness	No. 0: 3.0 mm (0.118 in.)
	No. 1: 3.1 mm (0.122 in.)
	No. 2: 3.2 mm (0.126 in.)
	No. 3: 3.3 mm (0.130 in.)
	No. 4: 3.4 mm (0.134 in.)
	No. 5: 3.5 mm (0.138 in.)
	No. 6: 3.6 mm (0.142 in.)
	No. 7: 3.7 mm (0.146 in.)
	No. 8: 3.8 mm (0.150 in.)
	No. 9: 3.9 mm (0.154 in.)
	No. A: 4.0 mm (0.158 in.)

ACCUMULATOR

Spring	Free Length/Outer diameter	Color
B-3	70.5 mm (2.776 in.)/19.7 mm (0.776 in.)	Purple
C-2	62.0mm (2.441)/15.9 mm (0.626 in.)	White
C-1 (Inner)	30.4 mm (1.197 in.)/11.4 mm (0.449 in.)	Pink
C-1 (Outer)	48.76 mm (1.920 in.)/16.6 mm (0.654 in.)	Light green
C-3 (Inner)	44.0 mm (1.732 in.)/14.0 mm (0.551 in.)	Yellow
C-3 (Outer)	73.35 mm (2.888 in.)/19.9 mm (0.784 in.)	Red

TORQUE SPECIFICATIONS

Automatic Transmission Assembly

Part tightened	N*m	kgf*cm	ft.*lbf
Park/neutral position switch Bolt	13	129	9.4
Park/neutral position switch Nut	6.9	70	61 in.*lbf
Transmission control cable x Automatic transmission	14	143	10
Engine mounting insulator rear No.1 x Automatic transmission	65	663	48
Automatic transmission x Engine (17 mm head)	71	720	53
Automatic transmission x Engine (14 mm head)	37	380	27
Torque converter clutch x Drive plate	48	489	35
Transmission control cable bracket x Automatic transmission	14	143	10
Oil cooler tube clamp bolt A	14	138	10
Oil cooler tube clamp bolt B	5.5	56	49 in.*lbf
Oil cooler tube outlet x Automatic transmission	34	350	25
Oil cooler tube inlet x Automatic transmission	34	350	25
Speed sensor x Automatic transmission	5.4	55	48 in.*lbf
Drain plug x Oil pan	28	285	21
Transmission wire set bolt x Automatic transmission	5.4	55	48 in.*lbf
Transmission wire clamp x Valve body (A)	10	100	7
Transmission wire clamp x Valve body (B)	11	112	8
Oil strainer x Valve body	10	100	7
Oil pan x Transmission case	4.4	45	39 in.*lbf
Shift solenoid valve S1 x Valve body	6.4	65	56 in.*lbf
Shift solenoid valve S2 x Valve body	10	100	7
Shift solenoid valve SR x Valve body	6.4	65	56 in.*lbf
Shift solenoid valve SLU, SL2 x Valve body	6.4	65	56 in.*lbf
Shift solenoid valve SLT, SL1 x Valve body	6.4	65	56 in.*lbf
Valve body x Transmission case	11	112	8
Floor shift assembly x Body	14	143	10
Overflow plug x Automatic transmission	20	204	15
Refill plug x Automatic transmission	39	400	29
Transmission control cable assembly x Body	5.5	56	49 in.*lbf
Frame crossmember x Body	72	734	53
Frame crossmember x Engine mounting insulator rear	19	189	14
Front suspension member bracket LH x Body	33	336	24
Front suspension member bracket RH x Body	33	336	24
No. 2manifold stay x Transmission case	40	408	30
Manifold stay x Transmission case	40	408	30
Negative battery terminal x Battery	3.9	40	35 in.*lbf
Drive plate x Crankshaft	83	846	61

Automatic Transmission Unit

Part tightened	N*m	kgf*cm	ft.*lbf
Transmission housing x Transmission case (14 mm)	34	345	25
Transmission housing x Transmission case (17 mm)	57	581	42
Automatic transaxle breather tube x Transmission case	5.4	55	48 in.*lbf
Transmission wire x Transmission case	5.4	55	48 in.*lbf
Oil cooler tube union x Transmission case	29	296	21
Transmission control shaft lever LH	16	163	12
Transmission revolution sensor x Transmission case	5.4	55	48 in.*lbf
Extension housing assembly x Transmission case	34	345	25

SS

Part tightened	N*m	kgf*cm	ft.*lbf
Oil pan x Transmission case	4.4	45	39 in.*lbf
Valve body oil strainer assembly x Transmission valve body assembly	10	100	7
Transmission valve body assembly x Transmission case	11	112	8
Parking lock pawl bracket x Transmission case	7.4	75	65 in.*lbf
Oil pump x Transmission case	21	214	15
Oil pump body x Stator shaft assembly	12	122	9
Lock plate x Transmission valve body assembly	6.4	65	57 in.*lbf
Shift solenoid valve SR x Transmission valve body assembly	6.4	65	57 in.*lbf
Shift solenoid valve S1 x Transmission valve body assembly	6.4	65	57 in.*lbf
Shift solenoid valve S2 x Transmission valve body assembly	10	100	7
ATF Temperature sensor x Transmission valve body assembly (12 mm)	10	100	7
ATF Temperature sensor x Transmission valve body assembly (36 mm)	11	112	8
Drain plug x Oil pan	28	285	21
Park/neutral position switch for Bolt	13	129	9.4
Park/neutral position switch for Nut	6.9	70	61 in.*lbf

A750F AUTOMATIC TRANSMISSION

SERVICE DATA

Line pressure Engine idling	D position	356 to 426 kPa (3.6 to 4.3 kgf*cm^2, 52 to 62 psi)
	R position	500 to 600 kPa (5.1 to 6.1 kgf*cm^2, 73 to 87 psi)
Line pressure AT stall (Throttle valve fully opened)	D position	1,367 to 1,477 kPa (14.0 to 15.1 kgf*cm^2, 198 to 214 psi)
	R position	1,278 to 1,506 kPa (13.0 to 15.4 kgf*cm^2, 185 to 218 psi)
Engine stall revolution	D positions	2,250 to 2,550 rpm
Time lag	N → D position	Less than 1.2 seconds
	N → R position	Less than 1.5 seconds
Engine idle speed (A/C OFF)	N position	650 to 750 rpm
Drive plate runout	Max.	0.20 mm (0.0079 in.)
Torque converter runout	Max.	0.30 mm (0.0118 in.)
Torque converter clutch installation distance		23.28 mm (0.9166 in.) or more
Shift schedule		
D position		
(Throttle valve fully opened)	1 → 2	32 to 40 mph (52 to 64 km/h)
	2 → 3	60 to 67 mph (97 to 108 km/h)
	3 → 4	89 to 97 mph (143 to 156 km/h)
	4 → 5	116 to 125 mph (187 to 201 km/h)
	5 → 4	111 to 119 mph (179 to 191 km/h)
	4 → 3	81 to 88 mph (130 to 141 km/h)
	3 → 2	54 to 58 mph (87 to 94 km/h)
	2 → 1	25 to 29 mph (41 to 46 km/h)
(Throttle valve fully closed)	4 → 5	30 to 34 mph (48 to 54 km/h)
	5 → 4	18 to 21 mph (29 to 34 km/h)
4 position		
(Throttle valve fully opened)	1 → 2	32 to 40 mph (52 to 64 km/h)
	2 → 3	60 to 67 mph (97 to 108 km/h)
	3 → 4	89 to 97 mph (143 to 156 km/h)
	5 → 4	124 to 132 mph (200 to 213 km/h)
	4 → 3	81 to 88 mph (130 to 141 km/h)
	3 → 2	54 to 58 mph (87 to 94 km/h)
	2 → 1	25 to 29 mph (41 to 46 km/h)
3 position		
(Throttle valve fully opened)	1 → 2	32 to 40 mph (52 to 64 km/h)
	2 → 3	60 to 67 mph (97 to 108 km/h)
	4 → 3	87 to 94 mph (140 to 151 km/h)
	3 → 2	54 to 58 mph (87 to 94 km/h)
	2 → 1	25 to 29 mph (41 to 46 km/h)
2 position		
(Throttle valve fully opened)	1 → 2	32 to 40 mph (52 to 64 km/h)
	3 → 2	58 to 64 mph (93 to 103 km/h)
	2 → 1	25 to 29 mph (41 to 46 km/h)
L position		
(Throttle valve fully opened)	2 → 1	25 to 29 mph (41 to 46 km/h)

Lock-up point Throttle valve opening 5%		
D position 5th gear	Lock-up ON	47 to 51 mph (75 to 82 km/h)
	Lock-up OFF	42 to 46 mph (68 to 74 km/h)
4 position 4th gear	Lock-up ON	45 to 48 mph (72 to 78 km/h)
	Lock-up OFF	40 to 43 mph (64 to 70 km/h)

AUTOMATIC TRANSMISSION UNIT

1st and reverse return spring free length	Standard: 23.74 mm (0.9347 in.)
Rear planetary gear pinion thrust clearance	Standard: 0.2 to 0.6 mm (0.008 to 0.024 in.)
Rear planetary gear bushing inside diameter	Standard: 20.075 mm (0.7904 in.)
1st and reverse brake pack clearance	0.8 to 1.1 mm (0.031 to 0.043 in.)
Flange thickness (1st and reverse brake)	Mark 0: 0 mm (0 in.) Mark 2: 0.2 mm (0.008 in.) Mark 4: 0.4 mm (0.016 in.) Mark 6: 0.6 mm (0.024 in.) Mark 8: 0.8 mm (0.031 in.) Mark 10: 1.0 mm (0.039 in.) Mark 12: 1.2 mm (0.047 in.) Mark 14: 1.4 mm (0.055 in.)
Intermediate shaft run out	Standard: 0.08 mm (0.003 in.)
Intermediate shaft diameter	Standard A: 25.962 to 25.975 mm (1.022 to 1.023 in.) Standard B: 25.962 to 25.975 mm (1.022 to 1.023 in.) Standard C: 32.062 to 32.075 mm (1.262 to 1.263 in.) Standard D: 32.062 to 32.075 mm (1.262 to 1.263 in.)
Rear planetary ring gear flange bushing inside diameter	Standard: 32.18 mm (1.2667 in.)
Center planetary gear pinion thrust clearance	Standard: 0.12 to 0.68 mm (0.005 to 0.027 in.)
Brake piston return spring No.2 free length	Standard: 17.45 mm (0.687 in.)
Brake piston return spring free length	Standard: 17.05 mm (0.671 in.)
Front planetary gear pinion thrust clearance	Standard: 0.20 to 0.60 mm (0.008 to 0.024 in.)
Front planetary gear bushing inside diameter	Standard: 57.48 mm (2.263 in.)
Brake piston No.1 piston stroke	0.42 to 0.72 mm (0.017 to 0.028 in.)
Flange thickness (brake piston No.1)	Mark 0: 2.0 mm (0.079 in.) Mark 1: 2.2 mm (0.087 in.) Mark 2: 2.4 mm (0.094 in.) Mark 3: 2.6 mm (0.102 in.)
Brake piston return spring No.3 free length	Standard: 15.72 mm (0.619 in.)

OIL PUMP

Body clearance	Standard: 0.10 to 0.17 mm (0.0039 to 0.0067 in.)
	Maximum: 0.17 mm (0.0067 in.)
Tip clearance	Standard: 0.07 to 0.15 mm (0.0028 to 0.0059 in.)
	Maximum: 0.15 mm (0.0059 in.)
Side clearance	Standard: 0.02 to 0.05 mm (0.0008 to 0.0020 in.)
	Maximum: 0.05 mm (0.0020 in.)
Drive and driven gear thickness	Mark 0: 10.740 to 10.749 mm (0.4228 to 0.4232 in.)
	Mark 1: 10.750 to 10.759 mm (0.4232 to 0.4236 in.)
	Mark 2: 10.760 to 10.769 mm (0.4236 to 0.4240 in.)
	Mark 3: 10.770 to 10.779 mm (0.4240 to 0.4244 in.)
	Mark 4: 10.780 to 10.789 mm (0.4244 to 0.4248 in.)
Starter shaft bushing inside diameter	Standard (Front side): 21.577 mm (0.850 in.)
	Standard (Rear side): 32.08 mm (1.263 in.)
Front oil pump body inside diameter	38.188 mm (1.504 in.)

CLUTCH DRUM AND INPUT SHAFT

Direct clutch

Pack clearance	0.50 to 0.80 mm (0.020 to 0.032 in.)
Clutch piston return spring free length	Standard: 19.51 mm (0.768 in.)
Flange thickness	No. 0: 3.0 mm (0.118 in.)
	No. 1: 3.1 mm (0.122 in.)
	No. 2: 3.2 mm (0.126 in.)
	No. 3: 3.3 mm (0.130 in.)
	No. 4: 3.4 mm (0.134 in.)
	No. 5: 3.5 mm (0.138 in.)
	No. 6: 3.6 mm (0.142 in.)
	No. 7: 3.7 mm (0.146 in.)
	No. 8: 3.8 mm (0.150 in.)
Reverse clutch	
Reverse clutch hub busing inside diameter	Standard: 35.812 to 35.837 mm (1.4099 to 1.4109 in.)
	Maximum: 35.887 mm (1.4129 in.)
Pack clearance	0.50 to 0.80 mm (0.020 to 0.032 in.)
Clutch piston return spring free length	Standard: 21.04 mm (0.828 in.)
Flange thickness	No. 0: 2.8 mm (0.110 in.)
	No. 1: 2.9 mm (0.114 in.)
	No. 2: 3.0 mm (0.118 in.)
	No. 3: 3.1 mm (0.122 in.)
	No. 4: 3.2 mm (0.126 in.)
	No. 5: 3.3 mm (0.130 in.)
	No. 6: 3.4 mm (0.134 in.)
	No. 7: 3.5 mm (0.138 in.)
	No. 8: 3.6 mm (0.142 in.)
	No. 9: 3.7 mm (0.146 in.)
	No. A: 3.8 mm (0.150 in.)
Froward clutch	
Forward clutch hub bushing inside diameter	Standard: 26.037 to 26.062 mm (1.0251 to 1.0261 in.)
	Maximum: 26.112 mm (1.028 in.)
Pack clearance	0.60 to 0.90 mm (0.024 to 0.035 in.)
Clutch piston return spring free length	Standard: 26.74 mm (1.053 in.)
Flange thickness	No. 0: 3.0 mm (0.118 in.)
	No. 1: 3.1 mm (0.122 in.)
	No. 2: 3.2 mm (0.126 in.)
	No. 3: 3.3 mm (0.130 in.)
	No. 4: 3.4 mm (0.134 in.)
	No. 5: 3.5 mm (0.138 in.)
	No. 6: 3.6 mm (0.142 in.)
	No. 7: 3.7 mm (0.146 in.)
	No. 8: 3.8 mm (0.150 in.)
	No. 9: 3.9 mm (0.154 in.)
	No. A: 4.0 mm (0.158 in.)

ACCUMULATOR

Spring	Free Length/Outer diameter	Color
B-3	70.5 mm (2.776 in.)/19.7 mm (0.776 in.)	Purple
C-2	62.0mm (2.441)/15.9 mm (0.626 in.)	White
C-1 (Inner)	30.4 mm (1.197 in.)/11.4 mm (0.449 in.)	Pink
C-1 (Outer)	48.76 mm (1.920 in.)/16.6 mm (0.654 in.)	Light green
C-3 (Inner)	44.0 mm (1.732 in.)/14.0 mm (0.551 in.)	Yellow

Spring	Free Length/Outer diameter	Color
C-3 (Outer)	73.35 mm (2.888 in.)/19.9 mm (0.784 in.)	Red

TORQUE SPECIFICATIONS

Automatic Transmission Assembly

Part tightened	N*m	kgf*cm	ft.*lbf
Park/neutral position switch Bolt	13	129	9.4
Park/neutral position switch Nut	6.9	70	61 in.*lbf
Transmission control cable x Automatic transmission	14	143	10
Engine mounting insulator rear No.1 x Automatic transmission	65	663	48
Automatic transmission x Engine (17 mm head)	71	720	53
Automatic transmission x Engine (14 mm head)	37	380	27
Torque converter clutch x Drive plate	48	489	35
Transmission control cable bracket x Automatic transmission	14	143	10
Oil cooler tube clamp bolt A	14	138	10
Oil cooler tube clamp bolt B	5.5	56	49 in.*lbf
Oil cooler tube outlet x Automatic transmission	34	350	25
Oil cooler tube inlet x Automatic transmission	34	350	25
Speed sensor x Automatic transmission	5.4	55	48 in.*lbf
Drain plug x Oil pan	28	285	21
Transmission wire set bolt x Automatic transmission	5.4	55	48 in.*lbf
Transmission wire clamp x Valve body (A)	10	100	7
Transmission wire clamp x Valve body (B)	11	112	8
Oil strainer x Valve body	10	100	7
Oil pan x Transmission case	4.4	45	39 in.*lbf
Shift solenoid valve S1 x Valve body	6.4	65	56 in.*lbf
Shift solenoid valve S2 x Valve body	10	100	7
Shift solenoid valve SR x Valve body	6.4	65	56 in.*lbf
Shift solenoid valve SLU, SL2 x Valve body	6.4	65	56 in.*lbf
Shift solenoid valve SLT, SL1 x Valve body	6.4	65	56 in.*lbf
Valve body x Transmission case	11	112	8
Floor shift assembly x Body	14	143	10
Overflow plug x Automatic transmission	20	204	15
Refill plug x Automatic transmission	39	400	29
Transmission control cable assembly x Body	5.5	56	49 in.*lbf
Frame crossmember x Body	72	734	53
Frame crossmember x Engine mounting insulator rear	19	189	14
Front suspension member bracket LH x Body	33	336	24
Front suspension member bracket RH x Body	33	336	24
No. 2 manifold stay x Automatic transmission	40	408	30
Manifold stay x Automatic transmission	40	408	30
Negative battery terminal x Battery	3.9	40	35 in.*lbf
Drive plate x Crankshaft	83	846	61
Propeller shaft heat insulator x Frame crossmember	16	160	12

Automatic Transmission Unit

Part tightened	N*m	kgf*cm	ft.*lbf
Transmission housing x Transmission case (14 mm)	34	345	25
Transmission housing x Transmission case (17 mm)	57	581	42
Automatic transaxle breather tube x Transmission case	5.4	55	48 in.*lbf
Transmission wire x Transmission case	5.4	55	48 in.*lbf
Oil cooler tube union x Transmission case	29	296	21
Transmission control shaft lever LH	16	163	12
Transmission revolution sensor x Transmission case	5.4	55	48 in.*lbf

Part tightened	N*m	kgf*cm	ft.*lbf
Transmission case adapter adapter x Transmission case	34	345	25
Oil pan x Transmission case	4.4	45	39 in.*lbf
Valve body oil strainer assembly x Transmission valve body assembly	10	100	7
Transmission valve body assembly x Transmission case	11	112	8
Parking lock pawl bracket x Transmission case	7.4	75	65 in.*lbf
Oil pump x Transmission case	21	214	15
Oil pump body x Stator shaft assembly	12	122	9
Lock plate x Transmission valve body assembly	6.4	65	57 in.*lbf
Shift solenoid valve SR x Transmission valve body assembly	6.4	65	57 in.*lbf
Shift solenoid valve S1 x Transmission valve body assembly	6.4	65	57 in.*lbf
Shift solenoid valve S2 x Transmission valve body assembly	10	100	7
ATF Temperature sensor x Transmission valve body assembly (36 mm)	11	112	8
ATF Temperature sensor x Transmission valve body assembly (12 mm)	10	100	7
Drain plug x Oil pan	28	285	21
Park/neutral position switch for Bolt	13	129	9.4
Park/neutral position switch for Nut	6.9	70	61 in.*lbf

CLUTCH

SERVICE DATA

Pedal height from asphalt sheet	-	183.5 to 193.5 mm (7.224 to 7.618 in.)
Clutch pedal free play	-	5.0 to 15.0 mm (0.197 to 0.591 in.)
Clutch pedal push rod play at pedal top	-	1.0 to 5.0 mm (0.039 to 0.197 in.)
Disc rivet head depth	Maximum	0.3 mm (0.012 in.)
Flywheel sub-assembly runout	Maximum	0.1 mm (0.004 in.)
Clutch release point from pedal full stroke end position	-	25 mm (0.984 in.) or more
Clutch cover	Minimum depth Minimum width	0.5 mm (0.020 in.) 6.0 mm (0.236 in.)
Clutch disc runout	Minimum	0.7 mm (0.028 in.)
Clutch start switch	ON (pushed) OFF (released)	Blow 1 Ω 10 kΩ or higher
Clutch start cancel switch Resistance	S/W OFF 2 - 4 2 - 4 (Apply battery voltage to terminals 1 and 3) S/W ON 2 - 4 (Apply battery voltage to terminals 1 and 3)	10 kΩ or higher 10 kΩ or higher Below 1 Ω

SS

TORQUE SPECIFICATIONS

Part tightened	N*m	kgf*cm	ft.*lbf
Clutch pedal sub-assembly x Clutch pedal support	34	347	25
Clutch pedal support set bolt x Body for bolt	18	184	13
Clutch pedal support set bolt x Body for nut	14	145	10
Clutch master cylinder assembly x Clutch pedal support	12	122	8.9
Clutch master cylinder assembly x Clutch master cylinder to 2 way tube	15	155	11
Release cylinder bleeder plug x Clutch release cylinder assembly	11	110	8.0
Clutch release cylinder assembly x Transmission housing	12	120	8.7
Clutch release cylinder assembly x Clutch master cylinder to 2 way tube	15	153	11
Clutch release cylinder assembly x Clutch master cylinder to 2 way tube bracket	12	120	8.7
Clutch cover assembly x Flywheel sub-assembly	19	195	14
Release fork support x Transmission assembly	47	479	35
Clutch start switch assembly x Clutch pedal support	16	160	12
Clutch housing cover No. 1 x Transmission housing	12	120	8.7
Clutch line bracket x Transmission housing	19	194	14
Clutch accumulator x Transmission housing	12	120	8.7
Clutch accumulator x Flexible hose tube	15	155	11
Clutch pedal stopper bolt x Clutch pedal support	26	260	19
Clutch switch x Clutch pedal support	15	153	11

RA61F MANUAL TRANSMISSION

SERVICE DATA

Reverse idler gear thrust clearance	STD: MAX:	0.10 to 0.25 mm (0.0039 to 0.0098 in.) 0.25 mm (0.0098 in.)
Reverse idler gear radial clearance	STD: MAX:	0.015 to 0.050 mm (0.0006 to 0.0020 in.) 0.050 mm (0.0020 in.)
Slotted pin drive in depth	-	0 to 0.5 mm (0 to 0.050 in.)
Transmission case oil seal dimension A	-	60.0 to 60.8 mm (2.362 to 2.394 in.)
Preload	-	0.45 to 1.35 N*m (4.59 to 13.77 kgf*cm, 3.98 to 11.95 in.*lbf)
Manual Transmission extension housing oil seal dimension A	-	- 0.5 to 0.5 mm (- 0.197 to 0.197 in.)
6th gear thrust clearance	-	0.20 to 0.49 mm (0.0079 to 0.0193 in.)
3rd gear thrust clearance	-	0.09 to 0.52 mm (0.0035 to 0.0205 in.)
4th gear thrust clearance	-	0.12 to 0.38 mm (0.0047 to 0.0150 in.)
6th gear radial clearance	-	0.015 to 0.065 mm (0.0006 to 0.0026 in.)
3rd gear radial clearance	-	0.015 to 0.067 mm (0.0006 to 0.0026 in.)
4th gear radial clearance	-	0.015 to 0.067 mm (0.0006 to 0.0026 in.)
Input shaft runout	MAX:	0.03 mm (0.0012 in.)
Input shaft outer diameter	STD: A B C D E MIN: A B C D E	34.002 to 34.015 mm (1.3387 to 1.3392 in.) 44.985 to 45.000 mm (1.7711 to 1.7717 in.) 44.985 to 45.000 mm (1.7711 to 1.7717 in.) 41.985 to 42.000 mm (1.6530 to 1.6535 in.) 32.967 to 32.974 mm (1.2979 to 1.2982 in.) 34.002 mm (1.3387 in.) 44.985 mm (1.7711 in.) 44.985 mm (1.7711 in.) 41.985 mm (1.6530 in.) 32.967 mm (1.2979 in.)
6th gear inside diameter	STD: MAX:	51.015 to 51.040 mm (2.0085 to 2.0095 in.) 51.040 mm (2.0095 in.)
3rd gear inside diameter	STD: MAX:	51.015 to 51.040 mm (2.0085 to 2.0095 in.) 51.040 mm (2.0095 in.)
4th gear inside diameter	STD: MAX:	51.015 to 51.040 mm (2.0085 to 2.0095 in.) 51.040 mm (2.0095 in.)
Gear shift fork No. 2 or No. 3 claw and glove of the transmission hub sleeve No. 2 clearance	No. 2 shift fork No. 3 shift fork	0.28 to 0.84 mm (0.0110 to 0.0331 in.) 0.28 to 0.65 mm (0.0110 to 0.0256 in.)
6th gear synchronizer ring back and 6th gear spline end clearance	STD: MIN:	0.70 to 1.50 mm (0.0276 to 0.0591 in.) 0.70 mm (0.0276 in.)
3rd gear synchronizer ring back and 3rd gear spline end clearance	STD: Inner Middle Outer MIN: Inner Middle Outer	1.20 to 2.20 mm (0.0472 to 0.0866 in.) 0.60 to 1.80 mm (0.0236 to 0.0709 in.) 0.80 to 1.80 mm (0.0315 to 0.0709 in.) 1.20 mm (0.0472 in.) 0.60 mm (0.0236 in.) 0.80 mm (0.0315 in.)
4th gear synchronizer ring back and 4th gear spline end clearance	STD: MIN:	0.70 to 1.50 mm (0.0276 to 0.0591 in.) 0.70 mm (0.0276 in.)
3rd gear thrust washer thickness	STD: MIN:	7.12 to 7.18 mm (0.2803 to 0.2827 in.) 7.12 mm (0.2803 in.)
Input shaft front bearing snap ring	Mark A B C D E F	2.65 to 2.70 mm (0.1043 to 0.1063 in.) 2.70 to 2.75 mm (0.1063 to 0.1083 in.) 2.75 to 2.80 mm (0.1083 to 0.1102 in.) 2.80 to 2.85 mm (0.1102 to 0.1122 in.) 2.85 to 2.90 mm (0.1122 to 0.1142 in.) 2.90 to 2.95 mm (0.1142 to 0.1161 in.)

Clutch hub No. 2 setting shaft snap ring	Mark A B C D E F G	1.77 to 1.82 mm (0.0697 to 0.0717 in.) 1.82 to 1.87 mm (0.0717 to 0.0736 in.) 1.87 to 1.92 mm (0.0736 to 0.0756 in.) 1.92 to 1.97 mm (0.0756 to 0.0776 in.) 1.97 to 2.02 mm (0.0776 to 0.0795 in.) 2.02 to 2.07 mm (0.0795 to 0.0815 in.) 2.07 to 2.12 mm (0.0815 to 0.0835 in.)
Gear thrust washer shaft snap ring	Mark A B C D E F	2.07 to 2.12 mm (0.0815 to 0.0835 in.) 2.12 to 2.17 mm (0.0835 to 0.0854 in.) 2.17 to 2.22 mm (0.0854 to 0.0874 in.) 2.22 to 2.27 mm (0.0874 to 0.0894 in.) 2.27 to 2.32 mm (0.0894 to 0.0913 in.) 2.32 to 2.37 mm (0.0913 to 0.0933 in.)
Transmission clutch hub No. 3 shaft snap ring	Mark A B C D E F G	2.10 to 2.15 mm (0.0827 to 0.0847 in.) 2.15 to 2.20 mm (0.0847 to 0.0866 in.) 2.20 to 2.25 mm (0.0866 to 0.0886 in.) 2.25 to 2.30 mm (0.0886 to 0.0906 in.) 2.30 to 2.35 mm (0.0906 to 0.0925 in.) 2.35 to 2.40 mm (0.0925 to 0.0945 in.) 2.40 to 2.45 mm (0.0945 to 0.0965 in.)
Output shaft inside diameter	STD: MAX:	45.017 to 45.025 mm (1.7723 to 1.7726 in.) 45.025 mm (1.7726 in.)
Synchronizer ring back and gear spline end clearance	STD: MIN:	0.70 to 1.50 mm (0.0276 to 0.0591 in.) 0.70 mm (0.0276 in.)
Reverse gear thrust clearance	-	0.125 to 0.375 mm (0.0049 to 0.0148 in.)
1st gear thrust clearance	-	0.10 to 0.43 mm (0.0039 to 0.0169 in.)
2nd gear thrust clearance	-	0.10 to 0.43 mm (0.0039 to 0.0169 in.)
Reverse gear radial clearance	-	0.015 to 0.065 mm (0.0006 to 0.0026 in.)
1st gear radial clearance	-	0.015 to 0.067 mm (0.0006 to 0.0026 in.)
2nd gear radial clearance	-	0.015 to 0.067 mm (0.0006 to 0.0026 in.)
Counter gear runout	MAX:	0.03 mm (0.0012 in.)
Counter gear outer diameter	STD: A B C D E MIN: A B C D E	34.002 to 34.015 mm (1.3387 to 1.3392 in.) 36.985 to 37.000 mm (1.4561 to 1.4567 in.) 47.985 to 48.000 mm (1.8892 to 1.8898 in.) 53.985 to 54.000 mm (2.1254 to 2.1260 in.) 34.002 to 34.015 mm (1.3387 to 1.3392 in.) 34.002 mm (1.3387 in.) 36.985 mm (1.4561 in.) 47.985 mm (1.8892 in.) 53.985 mm (2.1254 in.) 34.002 mm (1.3387 in.)
Reverse gear inside diameter	STD: MAX:	51.015 to 51.040 mm (2.0085 to 2.0095 in.) 51.040 mm (2.0095 in.)
1st gear inside diameter	STD: MAX:	54.015 to 54.040 mm (2.1266 to 2.1276 in.) 54.040 mm (2.1276 in.)
2nd gear inside diameter	STD: MAX:	60.015 to 60.040 mm (2.3628 to 2.3638 in.) 60.040 mm (2.3638 in.)
Gear shift fork No. 4 claw and glove of the transmission hub sleeve No. 3 clearance	-	0.26 to 0.84 mm (0.0102 to 0.0331 in.)
Gear shift fork No. 1 claw and glove of the transmission hub sleeve No. 1 clearance	-	0.15 to 0.35 mm (0.0059 to 0.0138 in.)
Reverse gear synchronizer ring back and reverse gear spline end clearance	STD: MIN:	0.70 to 1.30 mm (0.0276 to 0.0512 in.) 0.70 mm (0.0276 in.)
1st gear synchronizer ring back and 1st gear spline end clearance	STD: Inner Middle Outer MIN: Inner Middle Outer	1.48 to 2.12 mm (0.0583 to 0.0835 in.) 0.68 to 1.92 mm (0.0268 to 0.0756 in.) 0.88 to 1.72 mm (0.0346 to 0.0677 in.) 1.48 mm (0.0583 in.) 0.68 mm (0.0268 in.) 0.88 mm (0.0346 in.)

2nd gear synchronizer ring back and 2nd gear spline end clearance	STD: Inner Middle Outer MIN: Inner Middle Outer	1.48 to 2.12 mm (0.0583 to 0.0835 in.) 0.68 to 1.92 mm (0.0268 to 0.0756 in.) 0.88 to 1.72 mm (0.0346 to 0.0677 in.) 1.48 mm (0.0583 in.) 0.68 mm (0.0268 in.) 0.88 mm (0.0346 in.)
Counter gear rear bearing snap ring	Mark A B C D E F G H J K L M	2.35 to 2.40 mm (0.0925 to 0.0945 in.) 2.40 to 2.45 mm (0.0945 to 0.0965 in.) 2.45 to 2.50 mm (0.0965 to 0.0984 in.) 2.50 to 2.55 mm (0.0984 to 0.1004 in.) 2.55 to 2.60 mm (0.1004 to 0.1024 in.) 2.60 to 2.65 mm (0.1024 to 0.1043 in.) 2.65 to 2.70 mm (0.1043 to 0.1063 in.) 2.70 to 2.75 mm (0.1063 to 0.1083 in.) 2.75 to 2.80 mm (0.1083 to 0.1102 in. 2.80 to 2.85 mm (0.1102 to 0.1122 in.) 2.85 to 2.90 mm (0.1122 to 0.1142 in.) 2.90 to 2.95 mm (0.1142 to 0.1161 in.)
Clutch hub No. 1 shaft snap ring	Mark A B C D E F G	2.28 to 2.33 mm (0.0898 to 0.0917 in.) 2.33 to 2.38 mm (0.0917 to 0.0937 in.) 2.38 to 2.43 mm (0.0937 to 0.0957 in.) 2.43 to 2.48 mm (0.0957 to 0.0976 in.) 2.48 to 2.53 mm (0.0976 to 0.0996 in.) 2.53 to 2.58 mm (0.0996 to 0.1016 in.) 2.58 to 2.63 mm (0.1016 to 0.1035 in.)
Counter gear front bearing snap ring	Mark A B C D E F G H J K L M	2.35 to 2.40 mm (0.0925 to 0.0945 in.) 2.40 to 2.45 mm (0.0945 to 0.0965 in.) 2.45 to 2.50 mm (0.0965 to 0.0984 in.) 2.50 to 2.55 mm (0.0984 to 0.1004 in.) 2.55 to 2.60 mm (0.1004 to 0.1024 in.) 2.60 to 2.65 mm (0.1024 to 0.1043 in.) 2.65 to 2.70 mm (0.1043 to 0.1063 in.) 2.70 to 2.75 mm (0.1063 to 0.1083 in.) 2.75 to 2.80 mm (0.1083 to 0.1102 in.) 2.80 to 2.85 mm (0.1102 to 0.1122 in.) 2.85 to 2.90 mm (0.1122 to 0.1142 in.) 2.90 to 2.95 mm (0.1142 to 0.1161 in.)

TORQUE SPECIFICATIONS

Part tightened	N*m	kgf*cm	ft.*lbf
Transmission filler plug x Manual transmission	37	377	27
Manual transmission case cover x Manual transmission	12	117	8.5
Manual transmission x Engine for bolt A	72	730	53
Manual transmission x Engine for bolt B	37	380	28
Manual transmission x Engine mounting insulator rear No. 1	65	663	48
Frame crossmember sub-assembly No. 3 x Body	72	734	53
Frame crossmember sub-assembly No. 3 x Manual transmission	19	189	14
Manifold stay x Manual transmission	40	408	30
No. 2 manifold stay x Manual transmission	40	408	30
Battery x Negative battery terminal cable	3.9	40	35 in.*lbf
Gear shift fork No. 2 x Gear shift fork shaft No. 2	20	199	14
Gear shift fork No. 3 x Gear shift fork shaft No. 3	20	199	14
Transmission front case x Plug	39	400	29
Transmission front case x Interlock bracket	21	214	15
Transmission front case x Back-up light switch	44	449	33
Shift & select lever x Shift & select lever shaft	33	340	25
Transmission middle case x Drain plug	37	377	27
Transmission front case x Transmission middle case	40	408	30
Reverse idler gear shaft bolt x Reverse idler gear shaft	28	286	21
Transmission oil separator x Transmission middle case	8.5	87	75 in.*lbf
Bearing lock plate x Transmission rear case	11	115	8.3
Transmission rear case x Filler plug	37	377	27
Transmission rear case x Transmission middle case	40	408	30
Transmission rear case x Shift detent ball plug	25	250	18
Transmission rear case x Transmission case cover	18	184	13
Shift lever housing x Shift & select lever shaft	33	340	25
Floor shift control shift lever retainer sub-assembly x Transmission rear case	20	204	15
Front suspension member bracket LH x Body	33	336	24
Front suspension member bracket RH x Body	33	336	24
Accumulator to flexible hose tube x Flexible hose	15	153	11
Hose tube bracket x Manual transmission	19	194	14
Propeller shaft heat insulator x No. 3 frame crossmember sub-assembly	16	160	12

VF2A TRANSFER

SERVICE DATA

Rear output shaft		
Drive sprocket thrust clearance	Standard	0.10 to 0.25 mm (0.0039 to 0.0098 in.)
	Maximum	0.25 mm (0.0098 in.)
Output shaft rear journal surface diameter	(part A) Minimum	27.98 mm (1.1016 in.)
	(part B) Minimum	36.98 mm (1.4561 in.)
Drive sprocket radial clearance	Standard	0.010 to 0.055 mm (0.0004 to 0.0022 in.)
	Maximum	0.055 mm (0.0022 in.)
Front drive clutch sleeve to gear shift fork No. 1 clearance	Maximum	1.0 mm (0.039 in.)
High and low clutch sleeve to gear shift fork No. 2 clearance	Maximum	1.0 mm (0.039 in.)
Output shaft snap ring thickness	Mark K	2.00 to 2.05 mm (0.0787 to 0.0807 in.)
	Mark L	2.05 to 2.10 mm (0.0807 to 0.0827 in.)
	Mark A	2.10 to 2.15 mm (0.0827 to 0.0846 in.)
	Mark B	2.15 to 2.20 mm (0.0846 to 0.0866 in.)
	Mark C	2.20 to 2.25 mm (0.0866 to 0.0886 in.)
	Mark D	2.25 to 2.30 mm (0.0886 to 0.0906 in.)
	Mark E	2.30 to 2.35 mm (0.0906 to 0.0925 in.)
	Mark F	2.35 to 2.40 mm (0.0925 to 0.0945 in.)
	Mark G	2.40 to 2.45 mm (0.0945 to 0.0965 in.)
	Mark H	2.45 to 2.50 mm (0.0965 to 0.0984 in.)
	Mark J	2.50 to 2.55 mm (0.0984 to 0.1004 in.)
Input shaft		
Input shaft outside diameter	Minimum	47.59 mm (1.8736 in.)
Input shaft inside diameter	Maximum	39.14 mm (1.5409 in.)
Synchronizer ring back to input shaft spline clearance	Standard	1.05 to 1.85 mm (0.0413 to 0.0728 in.)
	Minimum	1.05 mm (0.0413 in.)
Input gear stopper shaft snap ring thickness	Mark A	2.10 to 2.15 mm (0.0827 to 0.0846 in.)
	Mark B	2.15 to 2.20 mm (0.0846 to 0.0866 in.)
	Mark C	2.20 to 2.25 mm (0.0866 to 0.0886 in.)
	Mark D	2.25 to 2.30 mm (0.0886 to 0.0906 in.)
	Mark E	2.30 to 2.35 mm (0.0906 to 0.0925 in.)
	Mark F	2.35 to 2.40 mm (0.0925 to 0.0945 in.)
	Mark G	2.40 to 2.45 mm (0.0945 to 0.0965 in.)
	Mark H	2.45 to 2.50 mm (0.0965 to 0.0984 in.)
	Mark J	2.50 to 2.55 mm (0.0984 to 0.1004 in.)
	Mark K	2.55 to 2.60 mm (0.1004 to 0.1024 in.)
	Mark L	2.60 to 2.65 mm (0.1024 to 0.1043 in.)
	Mark M	2.65 to 2.70 mm (0.1043 to 0.1063 in.)
	Mark N	2.70 to 2.75 mm (0.1063 to 0.1083 in.)
	Mark P	2.75 to 2.80 mm (0.1083 to 0.1102 in.)
	Mark Q	2.80 to 2.85 mm (0.1102 to 0.1122 in.)
	Mark R	2.85 to 2.90 mm (0.1122 to 0.1142 in.)
	Mark S	2.90 to 2.95 mm (0.1142 to 0.1161 in.)
	Mark T	2.95 to 3.00 mm (0.1161 to 0.1181 in.)
	Mark U	3.00 to 3.05 mm (0.1181 to 0.1201 in.)
Planetary gear		

Pinion gear thrust clearance	Standard	0.11 to 0.84 mm (0.0043 to 0.0331 in.)
	Maximum	0.84 mm (0.0331 in.)
Pinion gear radial clearance	Standard	0.009 to 0.038 mm (0.0004 to 0.0015 in.)
	Maximum	0.038 mm (0.0015 in.)
Input bearing shaft snap ring thickness	Mark 1	1.45 to 1.50 mm (0.0571 to 0.0591 in.)
	Mark 2	1.50 to 1.55 mm (0.0591 to 0.0610 in.)
	Mark 3	1.55 to 1.60 mm (0.0610 to 0.0630 in.)
	Mark 4	1.60 to 1.65 mm (0.0630 to 0.0650 in.)
	Mark 5	1.65 to 1.70 mm (0.0650 to 0.0669 in.)
Inner bearing press in depth	Standard	7.7 to 8.3 mm (0.303 to 0.327 in.)
Oil seal		
Oil seal drive in depth	Standard	-0.5 to 0.5 mm (-0.020 to 0.020 in.)

TORQUE SPECIFICATIONS

Transfer oil

Part tightened	N*m	kgf*cm	ft.*lbf
No. 1 transfer case plug (filler and drain) x Transfer assembly	37	377	27

Transfer case oil seal

Part tightened	N*m	kgf*cm	ft.*lbf
Lower transfer case protector x Transfer assembly	18	183	13

SS

Extension housing oil seal

Part tightened	N*m	kgf*cm	ft.*lbf
Lower transfer case protector x Transfer assembly	18	183	13

Transfer assembly

Part tightened	N*m	kgf*cm	ft.*lbf
Transfer case plug x Front transfer case	19	190	14
Transfer oil pump body sub-assembly x Front transfer case	7.5	76	66 in.*lbf
Transfer oil separator sub-assembly x Front transfer case	7.5	76	66 in.*lbf
No. 1 transfer case plug (filler and drain) x Transfer assembly	37	377	27
Rear transfer case x Front transfer case	28	285	21
Transfer extension housing sub-assembly x Rear transfer case	12	22	9
Transfer output shaft companion flange (front and rear)	118	1,203	87
Transfer control shift lever retainer sub-assembly x Front transfer case	18	183	13
Transfer case cover sub-assembly x Front transfer case	18	183	13
Transfer bearing retainer sub-assembly x Front transfer case	12	117	8
Transfer indicator switch x Front transfer case	37	377	27
Transfer assembly x Transmission assembly	24	244	17
Lower transfer case protector x Transfer assembly	18	183	13

VF4B TRANSFER

SERVICE DATA

Rear output shaft

Drive sprocket thrust clearance	Standard	0.15 to 0.24 mm (0.0059 to 0.0094 in.)
	Maximum	0.24 mm (0.0094 in.)
Output shaft rear journal surface diameter	(part A) Minimum	27.98 mm (1.1016 in.)
	(part B) Minimum	31.98 mm (1.2591 in.)
	(part C) Minimum	34.98 mm (1.3772 in.)
	(part D) Minimum	36.98 mm (1.4559 in.)
Drive sprocket radial clearance	Standard	0.01 to 0.06 mm (0.0004 to 0.0024 in.)
	Maximum	0.06 mm (0.0024 in.)
Front drive clutch sleeve to center differential clearance	Maximum	0.84 mm (0.0331 in.)
High and low clutch sleeve to gear shift fork No. 2 clearance	Maximum	0.84 mm (0.0331 in.)

Input shaft

Input shaft outside diameter	Minimum	47.59 mm (1.8736 in.)
Input shaft inside diameter	Maximum	48.14 mm (1.8953 in.)
Input gear stopper shaft snap ring thickness	Mark A	2.10 to 2.15 mm (0.0827 to 0.0846 in.)
	Mark B	2.15 to 2.20 mm (0.0846 to 0.0866 in.)
	Mark C	2.20 to 2.25 mm (0.0866 to 0.0886 in.)
	Mark D	2.25 to 2.30 mm (0.0886 to 0.0906 in.)
	Mark E	2.30 to 2.35 mm (0.0906 to 0.0925 in.)
	Mark F	2.35 to 2.40 mm (0.0925 to 0.0945 in.)
	Mark G	2.40 to 2.45 mm (0.0945 to 0.0965 in.)
	Mark H	2.45 to 2.50 mm (0.0965 to 0.0984 in.)
	Mark J	2.50 to 2.55 mm (0.0984 to 0.1004 in.)
	Mark K	2.55 to 2.60 mm (0.1004 to 0.1024 in.)
	Mark L	2.60 to 2.65 mm (0.1024 to 0.1043 in.)
	Mark M	2.65 to 2.70 mm (0.1043 to 0.1063 in.)
	Mark N	2.70 to 2.75 mm (0.1063 to 0.1083 in.)
	Mark P	2.75 to 2.80 mm (0.1083 to 0.1102 in.)
	Mark Q	2.80 to 2.85 mm (0.1102 to 0.1122 in.)
	Mark R	2.85 to 2.90 mm (0.1122 to 0.1142 in.)
	Mark S	2.90 to 2.95 mm (0.1142 to 0.1161 in.)
	Mark T	2.95 to 3.00 mm (0.1161 to 0.1181 in.)
	Mark U	3.00 to 3.05 mm (0.1181 to 0.1201 in.)

Planetary gear

Pinion gear thrust clearance	Standard	0.11 to 0.84 mm (0.0043 to 0.0331 in.)
	Maximum	0.84 mm (0.0331 in.)
Pinion gear radial clearance	Standard	0.009 to 0.038 (0.0004 to 0.0015 in.)
	Maximum	0.038 mm (0.0015 in.)
Input bearing shaft snap ring thickness	Mark 1	1.45 to 1.50 mm (0.0571 to 0.0591 in.)
	Mark 2	1.50 to 1.55 mm (0.0591 to 0.0610 in.)
	Mark 3	1.55 to 1.60 mm (0.0610 to 0.0630 in.)
	Mark 4	1.60 to 1.65 mm (0.0630 to 0.0650 in.)
	Mark 5	1.65 to 1.70 mm (0.0650 to 0.0669 in.)
Inner bearing press in depth	Standard	7.7 to 8.3 mm (0.303 to 0.327 in.)

Oil seal

Oil seal drive in depth	Standard	-0.5 to 0.5 mm (-0.020 to 0.020 in.)

TORQUE SPECIFICATIONS

Transfer oil

Part tightened	N*m	kgf*cm	ft.*lbf
No. 1 transfer case plug (for filler and drain)	37	377	27

Transfer case oil seal

Part tightened	N*m	kgf*cm	ft.*lbf
Lower transfer case protector x Transfer assembly	18	183	13

Extension housing oil seal

Part tightened	N*m	kgf*cm	ft.*lbf
Lower transfer case protector x Transfer assembly	18	183	13

Transfer assembly

Part tightened	N*m	kgf*cm	ft.*lbf
Transfer case plug x Front transfer case	19	190	14
Transfer oil pump body sub-assembly x Front transfer case	7.5	76	66 in.*lbf
Transfer oil separator sub-assembly x Front transfer case	7.5	76	66 in.*lbf
No. 1 transfer case plug (for filler and drain)	37	377	27
Transfer shift fork shaft plug	19	190	14
Rear transfer case x Front transfer case	28	285	21
Transfer extension housing sub-assembly x Rear transfer case	12	122	9
Transfer output shaft companion flange (for front and rear)	118	1,203	87
Transfer control shift lever retainer sub-assembly x Front transfer case	18	183	13
Transfer case cover sub-assembly x Front transfer case	18	183	13
Transfer bearing retainer sub-assembly x Front transfer case	12	117	8
Transfer indicator switch x Front transfer case	37	377	27
Transfer assembly x Transmission assembly	24	244	17
Lower transfer case protector x Transfer assembly	18	183	13

Speedometer driven gear

Part tightened	N*m	kgf*cm	ft.*lbf
Vehicle speed sensor x Transfer extension housing sub-assembly	12	122	9

PROPELLER SHAFT

SERVICE DATA

Propeller shaft runout	Maximum	0.3 mm (0.012 in.)
Universal joint spider bearing axial play	Maximum	0 mm (0 in.)

TORQUE SPECIFICATIONS

Part Tightened	N*m	kgf*cm	ft.*lbf
Front propeller shaft assembly x Front differential carrier assembly	88	899	65
Front propeller shaft assembly x Transfer assembly	88	899	65
Rear propeller shaft assembly x Rear differential carrier assembly	88	899	65
Rear propeller shaft assembly x Transfer assembly	88	899	65

DRIVE SHAFT

TORQUE SPECIFICATIONS

Part Tightened	N*m	kgf*cm	ft.*lbf
Front lower ball joint attachment x Steering knuckle	160	1,631	118
Tie rod end sub-assembly x Steering knuckle	91	928	67
Front axle hub nut x Front drive shaft	235	2,396	174
Front speed sensor x Steering knuckle	13	127	9
Front speed sensor x Steering knuckle	8.3	85	73 in.*lbf
Front wheel	112	1,137	82
Battery negative terminal x Battery	3.9	40	35 in.*lbf

DIFFERENTIAL

SERVICE DATA

FRONT DIFFERENTIAL CARRIER

Companion flange vertical runout	Maximum: 0.10 mm (0.0039 in.)
Companion flange lateral runout	Maximum: 0.10 mm (0.0039 in.)
Drive pinion preload (at start of torque)	New bearing: 0.98 to 1.75 N*m (10to 16 kgf*cm, 8.7 to 14 in.*lbf) Reused bearing: 0.49 to 0.78 N*m (5 to 8 kgf*cm, 4.3 to 6.9 in.*lbf)
Total preload (Drive pinion preload plus)	0.22 to 0.85 N*m (6 to 9 kgf*cm, 1.9 to 7.7 in.*lbf)
Drive pinion to ring gear backlash	0.11 to 0.21 mm (0.0043 to 0.0083 in.)
Side gear backlash	0.15 mm (0.0059 in.)
Carrier oil seal drive in depth	3.9 to 4.8 mm (0.153 to 0.0189 in.)
Side oil seal drive in depth	LH side: -0.45 to 0.45 mm (-0.0177 to 0.0177in.) RH side: 4.8 to 5.8 mm (0.189 to 0.2284 in.)
w/A.D.D. type: Differential clutch sleeve to clutch sleeve fork clearance	Maximum: 0.35 m (0.0138 in.)
Side gear thrust washer thickness mm (in.)	1.48 to 1.52 (0.0583 to 0.0568) 1.53 to 1.57 (0.0602 to 0.0618) 1.58 to 1.62 (0.0622 to 0.0638) 1.63 to 1.67 (0.0642 to 0.0657) 1.68 to 1.72 (0.0661 to 0.0677) 1.73 to 1.77 (0.0681 to 0.0697) 1.78 to 1.82 (0.0701 to 0.0717) 1.83 to 1.87 (0.0720 to 0.0736) 1.88 to 1.92 (0.0740 to 0.0756)
Side bearing adjusting washer thickness mm (in.)	1.57 to 1.59 (0.0618 to 0.0626) 1.59 to 1.61 (0.0626 to 0.0634) 1.61 to 1.63 (0.0634 to 0.0642) 1.63 to 1.65 (0.0642 to 0.0650) 1.65 to 1.67 (0.0650 to 0.0657) 1.67 to 1.69 (0.0657 to 0.0665) 1.69 to 1.71 (0.0665 to 0.0673) 1.71 to 1.73 (0.0673 to 0.0681) 1.73 to 1.75 (0.0681 to 0.0689) 1.75 to 1.77 (0.0689 to 0.0697) 1.77 to 1.79 (0.0697 to 0.0705) 1.79 to 1.81 (0.0705 to 0.0713) 1.81 to 1.83 (0.0713 to 0.0720) 1.83 to 1.85 (0.0720 to 0.0728) 1.85 to 1.87 (0.0728 to 0.0736) 1.87 to 1.89 (0.0736 to 0.0744) 1.89 to 2.01 (0.0744 to 0.0791) 2.01 to 2.03 (0.0791 to 0.0799) 2.03 to 2.05 (0.0791 to 0.0807) 2.05 to 2.07 (0.0807 to 0.0815) 2.07 to 2.09 (0.0815 to 0.0822) 2.09 to 2.11 (0.0822 to 0.0830) 2.11 to 2.13 (0.0830 to 0.0839) 2.13 to 2.15 (0.0839 to 0.0846) 2.15 to 2.17 (0.0846 to 0.0854)

SS

Drive pinion bearing adjusting washer thickness mm (in.)	1.69 to 1.71 (0.0665 to 0.0673) 1.72 to 1.74 (0.0677 to 0.0685) 1.75 to 1.77 (0.0689 to 0.0697) 1.78 to 1.80 (0.0700 to 0.0709) 1.81 to 1.83 (0.0713 to 0.0720) 1.84 to 1.86 (0.0724 to 0.0732) 1.87 to 1.89 (0.0736 to 0.0744) 1.90 to 1.92 (0.0748 to 0.0756) 1.93 to 1.95 (0.0760 to 0.0768) 1.96 to 1.98 (0.0772 to 0.0780) 1.99 to 2.01 (0.0783 to 0.0791) 2.02 to 2.04 (0.0795 to 0.0803) 2.05 to 2.07 (0.0807 to 0.0815) 2.08 to 2.10 (0.0819 to 0.0827) 2.11 to 2.13 (0.0831 to 0.0839) 2.14 to 2.16 (0.0843 to 0.0850) 2.17 to 2.19 (0.0854 to 0.0862) 2.20 to 2.22 (0.0866 to 0.0874) 2.23 to 2.25 (0.0878 to 0.0886) 2.26 to 2.28 (0.0890 to 0.0898) 2.29 to 2.31 (0.0902 to 0.0909) 2.32 to 2.34 (0.0913 to 0.0921)

REAR DIFFERENTIAL

Companion flange vertical runout	Maximum: 0.10 mm (0.0039 in.)
Companion flange lateral runout	Maximum: 0.10 mm (0.0039 in.)
Drive pinion preload (at start of torque)	New bearing: 1.05 to 1.64 N*m (11to 17 kgf*cm, 9.3 to 15 in.*lbf) Reused bearing: 0.56 to 0.85 N*m (6 to 9 kgf*cm, 4.9 to 7.5 in.*lbf)
Total preload (Drive pinion preload plus)	0.39 to 0.59 N*m (4 to 6 kgf*cm, 3.4 to 5.2 in.*lbf)
Ring gear runout	Maximum: 0.07 mm (0.0028 in.)
Ring gear backlash	0.13 to 0.18 mm (0.0051 to 0.0071 in.)
Side gear backlash	0.05 to 0.20 mm (0.0020 to 0.0080 in.)
Differential case runout	Maximum: 0.07 mm (0.0028 in.)
Rear differential front oil seal drive in depth	0.55 to 1.45 mm (0.0213 to 0.0567 in.)
Differential lock type: Side gear thrust washer thickness mm (in.)	0.90 mm (0.059 in.) 1.00 mm (0.039 in.) 1.10 mm (0.043 in.) 1.20 mm (0.047 in.) 1.30 mm (0.051 in.)
Tooth contact pattern adjusting washer thickness mm (in.)	1.69 to 1.71 (0.0665 to 0.0673) 1.72 to 1.74 (0.0677 to 0.0685) 1.75 to 1.77 (0.0689 to 0.0709) 1.78 to 1.80 (0.0713 to 0.0720) 1.81 to 1.83 (0.0724 to 0.0732) 1.84 to 1.86 (0.0736 to 0.0744) 1.87 to 1.89 (0.0748 to 0.0756) 1.90 to 1.92 (0.0760 to 0.0768) 1.93 to 1.95 (0.0772 to 0.0780) 1.96 to 1.98 (0.0783 to 0.0791) 1.99 to 2.01 (0.0795 to 0.0803) 2.02 to 2.04 (0.0807 to 0.0815) 2.05 to 2.07 (0.0819 to 0.0827) 2.08 to 2.10 (0.0831 to 0.0839) 2.11 to 2.13 (0.0843 to 0.0839) 2.14 to 2.16 (0.0843 to 0.0850) 2.17 to 2.19 (0.0854 to 0.0862) 2.20 to 2.22 (0.0866 to 0.0874) 2.23 to 2.25 (0.0878 to 0.0886) 2.26 to 2.28 (0.0890 to 0.0898) 2.29 to 2.31 (0.0902 to 0.0909) 2.32 to 2.34 (0.0913 to 0.0921)

TORQUE SPECIFICATIONS

FRONT DIFFERENTIAL CARRIER

Part tightened	N*m	kgf*cm	ft.*lbf
Differential breather hose x Differential carrier	13	133	10
No. 3 differential support x No. 1 differential mount nut	87	887	64
No. 3 differential support x Differential carrier	108	1,100	80
No. 2 differential support x Differential carrier	160	1,630	118
No. 1 differential support x Differential carrier	186	1,900	137
Differential tube x Differential carrier	110	1,120	81
Differential tube x Differential vacuum actuator	21	210	15
Drive pinion companion flange x Drive pinion	370	3,770	273
Differential side bearing retainer x Differential carrier	50	510	37
Differential case x Differential rig gear	97	985	71
Differential carrier x Drain lug	65	660	48
Differential carrier x Filler plug	39	400	29

REAR DIFFERENTIAL CARRIER

Part tightened	N*m	kgf*cm	ft.*lbf
Axle housing x Drain plug Axle housing x Filler plug	49	500	36
Differential carrier x Propeller shaft	88	899	65
Drive pinion companion flange nut x Differential drive pinion	370	3,770	273
Bearing cap x Differential bearing adjusting nut lock	13	130	9
Differential case x Differential ring gear	97	985	71
RH differential case x LH differential case (Differential lock type)	47	480	35

AXLE

SERVICE DATA

Front axle hub bearing backlash	Maximum	0.05 mm (0.0020 in.)
Front axle hub bearing runout	Maximum	0.05 mm (0.0020 in.)
Rear axle shaft bearing backlash	Maximum	0.05 mm (0.0020 in.)
Rear axle shaft bearing runout	Maximum	0.05 mm (0.0020 in.)
Rear axle shaft runout	Maximum	1.5 mm (0.0591 in.)
Rear axle shaft flange runout	Maximum	0.05 mm (0.0020 in.)

TORQUE SPECIFICATIONS

Part Tightened	N*m	kgf*cm	ft.*lbf
Front wheel	112	1,137	82
Rear wheel	112	1,137	82
Front wheel adjusting nut x Front axle hub	275	2,804	203
Front axle with abs rotor bearing assembly x Steering knuckle	80	816	59
Front upper suspension arm x Steering knuckle	110	1,122	81
Front disc brake caliper assembly x Steering knuckle	123	1,254	91
Front brake tube bracket x Steering knuckle	29	296	21
Brake tube x Disc brake cylinder assembly	14 (15)	143 (155)	10 (11)
Battery negative terminal x Battery	3.9	40	35 in.*lbf
Rear axle shaft x Rear axle housing assembly	120	1,224	89
Parking brake cable x Parking brake plate	8.0	82	71 in.*lbf
Brake tube x Rear flexible hose	14 (15)	143 (155)	10 (11)

( ): For use without SST

SUSPENSION

SERVICE DATA

Vehicle height (See page SP-2)		
GSJ10L-GKASKA	A-B C-D	115.9 mm (4.56 in.) 81.4 mm (3.20 in.)
GSJ15L-GKFSKA	A-B C-D	87.0 mm (3.43 in.) 61.4 mm (2.42 in.)
GSJ15L-GKASKA	A-B C-D	87.0 mm (3.43 in.) 61.6 mm (2.43 in.)
Toe-in		
	A+B C-D Rack end length difference	0°05' +- 0°10' (0.08° +- 0.16°) 1.0 +- 2.0 mm (0.04 +- 0.08 in.) 1.0 mm (0.039 in.) or less
Wheel turning angle		
GSJ10L-GKASKA	Inside wheel - Outside wheel (Reference)	32°45' (30°45' to 33°45') 32.75°(30.75° to 33.75°) 28°56' (28.93°)
GSJ15L-GKFSKA	Inside wheel - Outside wheel (Reference)	33°10' (31°10' to 34°10') 33.17°(31.17° to 34.17°) 29°38' (29.63°)
GSJ15L-GKASKA	Inside wheel - Outside wheel (Reference)	33°10' (31°10' to 34°10') 33.17°(31.17° to 34.17°) 29°38' (29.63°)
Camber		
GSJ10L-GKASKA		-0°34' +- 30' (-0.57° +- 0.50°)
GSJ15L-GKFSKA		0°09' +- 30' (0.15° +- 0.50°)
GSJ15L-GKASKA		0°09' +- 30' (0.15° +- 0.50°)
Caster		
GSJ10L-GKASKA		3°34' +- 30' (3.57° +- 0.50°)
GSJ15L-GKFSKA		2°49' +- 30' (2.82° +- 0.50°)
GSJ15L-GKASKA		2°49' +- 30' (2.82° +- 0.50°)
Steering Axis Inclination (Reference)		
GSJ10L-GKASKA		12°55' +- 30' (12.92° +- 0.50°)
GSJ15L-GKFSKA		12°21' +- 30' (12.35° +- 0.50°)
GSJ15L-GKASKA		12°21' +- 30' (12.35° +- 0.50°)
Front upper suspension arm		
	Upper ball joint turning torque	4.5 N*m (46 kgf*cm, 40 in.*lbf) or less
Front lower suspension arm		
	Lower ball joint turning torque	3.0 N*m (31 kgf*cm, 27 in.*lbf) or less
Front stabilizer link assembly		
	Stabilizer link ball joint turning torque	0.05 to 1.96 N*m (0.5 to 20.0 kgf*cm, 0.4 to 17.3 in.*lbf)
Rear stabilizer link assembly		
	Stabilizer link ball joint turning torque	0.05 to 1.96 N*m (0.5 to 20.0 kgf*cm, 0.4 to 17.3 in.*lbf)

TORQUE SPECIFICATIONS

Part Tightened	N*m	kgf*cm	ft.*lbf
Tie rod end lock nut	88	897	65
Front support to front shock absorber nut x Front shock absorber	25	255	18
Front shock absorber with coil spring x Frame assembly	64	653	47
Front stabilizer link assembly x Steering knuckle	70	714	52
Engine under cover sub-assembly x Frame assembly	29	296	21
Front wheel	112	1,137	82
Front shock absorber x Front lower suspension arm	135	1,377	100
Wire harness bracket x Frame assembly	5.8	59	51 in.*lbf
Front upper suspension arm x Steering knuckle	110	1,122	81
Skid control sensor wire x Front upper suspension arm	13	127	9
Front upper suspension arm x Frame assembly	115	1,173	85
Front lower ball joint attachment x Front lower suspension arm	140	1,428	103
Front lower ball joint attachment x Steering knuckle	160	1,631	118
Front lower suspension arm x Frame assembly	135	1,377	100
Front stabilizer bracket x Frame assembly	40	408	30
Front stabilizer link assembly x Front stabilizer bar	70	714	52
Front stabilizer link assembly x Steering knuckle	70	714	52
Rear shock absorber x Rear axle housing assembly	98	1,000	72
Rear brake tube flexible hose x Rear brake tube	14 (15)	143 (155)	10 (11)
Rear wheel	112	1,137	82
Rear shock absorber x Frame assembly	25	255	18
Rear upper control arm x Frame assembly	80	816	59
Rear upper control arm x Rear axle housing assembly	80	816	59
Parking brake cable x Frame assembly	13	127	9
Rear lower control arm x Frame assembly	130	1,326	96
Rear lower control arm x Rear axle housing assembly	130	1,326	96
Rear lateral control rod x Frame assembly	130	1,326	96
Rear lateral control rod x Rear axle housing assembly	130	1,326	96
Rear stabilizer bracket cover x Rear axle housing assembly	30	306	22
Rear stabilizer link assembly x Rear stabilizer bar	70	714	52
Rear stabilizer link assembly x Frame assembly	15	153	11

( ): for use without SST

TIRE AND WHEEL

SERVICE DATA

Cold tire inflation pressure	P265/70R17 113S	220 kPa (2.2 kgf/cm^2, 32 psi)
Tire runout		3.0 mm (0.118 in.) or less
Imbalance after adjustment	Steel wheel	12 g (0.026 lb) or less
	Aluminum wheel	6 g (0.013 lb) or less

BRAKE CONTROL

TORQUE SPECIFICATIONS

Part Tightened	N*m	kgf*cm	ft.*lbf
Front speed sensor x Steering knuckle	8.3	85	73 in.*lbf
Front wheel	112	1,137	82
Battery negative terminal x Battery	3.9	40	35 in.*lbf
Rear speed sensor x Rear axle housing	8.3	85	73 in.*lbf
Rear wheel	112	1,137	82
Yaw rate and deceleration sensor x Body	13	136	10

BRAKE

SERVICE DATA

Brake pedal height (from dash panel)		168.7 to 178.7 mm (6.642 to 7.035 in.)
Rod operating adapter length		201. 7 to 202.7 mm (7.941 to 7.980 in.)
Stop light switch clearance		0.5 to 2.6 mm (0.020 to 0.102 in.)
Brake pedal free play		1.0 to 6.0 mm (0.039 to 0.236 in.)
Brake pedal reserve distance from asphalt sheet at 490 N (50 kgf, 110.2 lbf)		More than 56mm (2.20 in.)
Front disc brake pad lining thickness	Standard Minimum	11.5 mm (0.453 in.) 1.0 mm (0.039 in.)
Front disc thickness	Standard Minimum	28.0 mm (1.102 in.) 26.0 mm (1.024 in.)
Front disc runout	Maximum	0.05 mm (0.0020 in.)
Rear disc brake pad lining thickness	Standard Minimum	10.0 mm (0.394 in.) 1.0 mm (0.039 in.)
Rear disc thickness	Standard Minimum	18.0 mm (0.709 in.) 16.0 mm (0.630 in.)
Rear disc runout	Maximum	0.20 mm (0.0079 in.)

TORQUE SPECIFICATIONS

Part Tightened	N*m	kgf*cm	ft.*lbf
Front disc brake bleeder plug x Disc brake cylinder assembly	11	110	8
Rear disc brake bleeder plug x Rear disc brake cylinder assembly	11	110	8
Rod operating adapter lock nut	26	260	19
Brake pedal x Brake pedal support sub-assembly	34	350	25
Brake pedal support sub-assembly x Hydraulic brake booster	14	145	10
Brake pedal support reinforcement x Reinforcement	20	204	15
Brake pedal support reinforcement x Brake pedal support sub-assembly	34	350	25
Battery negative terminal x Battery	3.9	40	35 in.*lbf
Brake booster accumulator assembly x Brake booster pump assembly	57	585	42
Master cylinder solenoid x Master cylinder body	32	325	24
Brake booster pump bracket x Master cylinder body	7.8	80	69 in.*lbf
Brake actuator bracket x Master cylinder body	7.8	80	69 in.*lbf
Pin x Brake booster pump assembly	7.8	80	69 in.*lbf
Brake booster pump (wire harness) x Master cylinder solenoid	2.9	30	26 in.*lbf
Brake actuator No. 1 tube x Brake booster pump assembly	14 (15)	143 (155)	10 (11)
Brake actuator No. 1 tube x Master cylinder body	14 (15)	143 (155)	10 (11)
Brake master cylinder reservoir sub-assembly x Master cylinder body	1.7	17	15 in.*lbf
Brake actuator No. 1 bracket x Master cylinder solenoid	7.8	80	69 in.*lbf
Brake tube x Hydraulic brake booster	14 (15)	143 (155)	10 (11)
Disc brake cylinder assembly x Steering knuckle	123	1,254	91
Brake tube x Disc brake cylinder assembly	14 (15)	143 (155)	10 (11)
Front wheel	112	1,137	82
Front flexible hose x Brake tube	14 (15)	143 (155)	10 (11)
Rear disc brake cylinder mounting x Rear axle housing assembly	105	1,071	78
Rear disc brake cylinder assembly x Rear disc brake cylinder mounting	88	897	65
Rear flexible hose x Rear disc brake cylinder assembly	31	316	23
Rear wheel	112	1,137	82
Rear flexible hose x Brake tube	14 (15)	143 (155)	10 (11)
Rear brake tube flexible hose x Brake tube	14 (15)	143 (155)	10 (11)

( ): for use without SST

PARKING BRAKE

SERVICE DATA

Parking brake lever travel at 200 N (20 kgf, 45 lbf)		5 to 7 clicks
Brake disc inside diameter	Standard Maximum	210 mm (8.268 in.) 211 mm (8.307 in.)
Parking brake shoe lining thickness	Standard Minimum	4.0 mm (0.157 in.) 1.0 mm (0.039 in.)
Parking brake shoe lever clearance		Less than 0.25 mm (0.0098 in.)
Parking brake switch	Released Pushed in	Below 1 Ω 10 kΩ or higher

TORQUE SPECIFICATIONS

Part Tightened	N*m	kgf*cm	ft.*lbf
Rear wheel	112	1,137	82
Parking brake lever x Body	13	127	9
Battery negative terminal x Battery	3.9	40	35 in.*lbf
Parking brake cable x Frame assembly	13	127	9
Parking brake cable x Parking brake plate	8.0	82	71 in.*lbf
Parking brake cable heat insulator x Frame assembly	13	127	9
Rear disc brake caliper assembly x Rear axle housing assembly	105	1,071	78

STEERING COLUMN

SERVICE DATA

Steering wheel free play	30 mm (1.18 in.)

TORQUE SPECIFICATIONS

Part Tightened	N*m	kgf*cm	ft.*lbf
Steering wheel set nut	50	510	37
Steering wheel pad set screw	8.8	90	78 n.*lbf
Steering column assembly set nut	21	214	15
Steering column assembly x Steering sliding w/ coupling yoke sub-assembly	26	265	19
Steering sliding w/ coupling yoke sub-assembly x Steering sliding yoke	36	367	27
Power steering gear box x intermediate shaft No. 2	36	367	27

POWER STEERING

SERVICE DATA

Power steering fluid	Fluid level rise	Maximum	5 mm (0.20 in.)
	Fluid pressure at idle speed with valve closed		8.800 kPa (89.7 kgf/cm^2, 1,276 psi)
Steering wheel	Steering effort at idle speed	Reference	6.0 N*m (60 kgf*cm, 53in.*lbf)
Power steering vane pump	Vane pump rotating torque		0.27 N*m (2.8 kgf*cm, 2.4 in.*lbf) or less
	Vane plate height	Minimum	7.6 mm (0.299 in.)
	Vane plate thickness	Minimum	1.405 mm (0.0553 in.)
	Vane plate length	Minimum	11.993 mm (0.4722 in.)
	Clearance between the rotor groove and plate	Maximum	0.025 mm (0.0010 in.)
	Spring free length	Minimum	29.2 mm (1.150 in.)
Power steering linK	Total preload (tie rod rotating torque)	Turning	0.29 to 1.96 N*m (2.9 to 20.0 kgf*cm, 2.57 to 17.35 in.*lbf)
	Total preload (control valve rotating torque)	Turning	0.8 to 1.6 N*m (8.2 to 16.3 kgf*cm, 7.1to 14.2 in.*lbf)

TORQUE SPECIFICATIONS

Part tightened	N*m	kgf*cm	ft.*lbf
Power steering vane pump			
Vane pump housing rear x Vane pump housing front	22	224	16
Pressure port union	69	704	51
Suction port union set bolt	9.0	92	80 in.*lbf
Vane pump assembly x Engine	21	214	15
Pressure feed tube assembly x Vane pump assembly	44 (42)	449 (428)	33 (31)

( ): For use without SST

Part tightened	N*m	kgf*cm	ft.*lbf
No. 1 Engine under cover Body	29	296	21
Rear Engine under cove x Body for 4WD	29	296	21
Power steering link assembly			
Control valve housing set bolt	18	184	13
Rack guide spring cap lock nut	69 (65)	700 (660)	51 (48)
Power steering rack x Rack end	103 (98)	1,050 (1,000)	76 (72)
Tie rod assembly lock nut	88	897	65
Turn pressure tube union nut	25 (23)	250 (235)	18 (17)
Power steering link assembly set bolt and nut	100	1,020	74
Pressure feed and return tubes x Control valve housing	25 (23)	250 (235)	18 (17)
Pressure feed tube clamp set bolt	28	286	21
Outlet return tube	44 (42)	499 (428)	33 (31)
Tie rod end x steering knuckle	49	500	36

( ): For use without SST

AIR CONDITIONING

SERVICE DATA

Refrigerant charge volume	570 to 630 g (20.11 to 22.22 oz.)
Magnetic clutch clearance	0.35 to 0.60 mm (0.014 to 0.024 in.)
Magnetic clutch relay	3 - 5 : 10kΩ or higher 3 - 5 : Below 1Ω(Apply battery voltage to terminals 1 and 2)
Heater blower relay	3 - 4 : Below 1Ω 3 - 4 : 10kΩ or higher (Apply battery voltage to terminals 1 and 2) 3 - 5 : 10kΩ or higher 3 - 5 : Below 1Ω(Apply battery voltage to terminals 1 and 2)

TORQUE SPECIFICATIONS

Part Tightened	N*m	kgf*cm	ft.*lbf
Negative battery terminal x Battery	3.9	40	35 in.*lbf

AIR CONDITIONING UNIT

Part Tightened	N*m	kgf*cm	ft.*lbf
No. 1 cooler evaporator x Cooler expansion valve x Air conditioning tube	3.5	36	31 in.*lbf
Air conditioning unit assembly x Instrument panel reinforcement	9.8	100	87 in.*lbf
Air conditioning unit assembly x Body	5.4	55	48 in.*lbf
Main body ECU (Driver side junction block x Instrument panel reinforcement	8.4	86	74 in.*lbf
Bracket x Main body ECU (Driver side junction block	8.4	86	74 in.*lbf
Steering intermediate shaft assembly x Thrust stopper	36	367	27

COMPRESSOR AND MAGNETIC CLUTCH

Part Tightened	N*m	kgf*cm	ft.*lbf
Magnet clutch hub x Cooler compressor assembly	18	184	13
Pressure relief valve x Cooler compressor assembly	8.0	82	71 in.*lbf
Cooler compressor assembly x Compressor bracket	24.5	250	18
Discharge hose sub-assembly x Cooler compressor assembly	9.8	100	87 in.*lbf
Suction hose sub-assembly x Cooler compressor assembly	9.8	100	87 in.*lbf
Suction hose sub-assembly x Timing chain cover	7.8	80	69
Battery hold down clamp x Battery	6.0	61	53 in.*lbf

CONDENSER

Part Tightened	N*m	kgf*cm	ft.*lbf
Cap x Modulator	2.9	30	25 in.*lbf
No. 1 cooler condenser cushion x Body	5.5	56	49 in.*lbf
Cooler condenser assembly x No. 1 cooler condenser cushion	5.5	56	49 in.*lbf
No. 2 cooler condenser cushion RH x Air conditioning tube assembly	5.4	55	48 in.*lbf
No. 2 cooler condenser cushion RH x Cooler condenser assembly	5.5	56	49 in.*lbf
No. 2 cooler condenser cushion LH x Cooler condenser assembly	5.5	56	49 in.*lbf
Cooler bracket x No. 2 cooler condenser cushion LH	5.4	55	48 in.*lbf
Air conditioning tube assembly x Cooler condenser assembly	5.4	55	48 in.*lbf
Discharge hose sub-assembly x Condenser assembly	5.4	55	48 in.*lbf

SUPPLEMENTAL RESTRAINT SYSTEM

TORQUE SPECIFICATIONS

Part Tightened	N*m	kgf*cm	ft.*lbf
Steering pad x Steering wheel assembly	8.8	90	78 in.*lbf
Steering wheel assembly x Steering column assembly	50	510	37
Front passenger airbag assembly x Instrument panel reinforcement	20	204	15
Curtain shield airbag assembly x Body	9.8	100	7
Center airbag sensor assembly x Body	17.5	179	13
Front airbag sensor x Body	9.0	92	80 in.*lbf
Side airbag sensor x Body	9.0	92	80 in.*lbf
Rear airbag sensor x Body	9.0	92	80 in.*lbf
Seat position sensor x Front seat assembly	8.0	82	71 in.*lbf

SEAT BELT

SERVICE DATA

FRONT SEAT INNER BELT ASSEMBLY:

Item	Tester Connection	Condition	Specified Condition
Standard resistance	10 - 11	Tongue plate fastened	Below 1 Ω
		Tongue plate released	10 kΩ or higher

TORQUE SPECIFICATIONS

FRONT PASSENGER SEAT BELT WARNING LIGHT:

Part Tightened	N*m	kgf*cm	ft.*lbf
Negative battery terminal x Battery	3.9	40	35 in.*lbf

FRONT SEAT INNER BELT ASSEMBLY:

Part Tightened	N*m	kgf*cm	ft.*lbf
Front seat inner belt assembly x Front seat adjuster sub-assembly	42	430	31
Negative battery terminal x Battery	3.9	40	35 in.*lbf

FRONT SEAT OUTER BELT ASSEMBLY:

Part Tightened	N*m	kgf*cm	ft.*lbf
Front shoulder belt anchor adjuster assembly x Access door panel sub-assembly	42	430	31
Front seat outer belt assembly x Access door panel sub-assembly (for Upper Stay of Retractor)	8.5	85	75 in.*lbf
Front seat outer belt assembly x Access door panel sub-assembly (for Lower Stay of Retractor)	42	430	31
Front seat outer belt assembly x Access door panel sub-assembly (for Through Anchor)	42	430	31
Negative battery terminal x Battery	3.9	40	35 in.*lbf

REAR SEAT INNER BELT ASSEMBLY:

Part Tightened	N*m	kgf*cm	ft.*lbf
Rear seat inner belt assembly x Body	42	430	31

REAR SEAT OUTER BELT ASSEMBLY:

Part Tightened	N*m	kgf*cm	ft.*lbf
Rear seat outer belt assembly x Body (for Upper Stay of Retractor)	8.5	85	75 in.*lbf
Rear seat outer belt assembly x Body (for Lower Stay of Retractor)	42	430	31
Rear seat outer belt assembly x Body (for Through Anchor)	42	430	31
Rear seat outer belt assembly x Body (for Anchor Plate)	42	430	31
Negative battery terminal x Battery	3.9	40	35 in.*lbf

REAR CENTER SEAT INNER BELT ASSEMBLY:

Part Tightened	N*m	kgf*cm	ft.*lbf
Rear center seat inner belt assembly x Body	42	430	31

REAR CENTER SEAT OUTER BELT ASSEMBLY:

Part Tightened	N*m	kgf*cm	ft.*lbf
Rear center seat outer belt assembly x Rear seatback frame sub-assembly	44	450	33

CRUISE CONTROL

TORQUE SPECIFICATIONS

Part Tightened	N*m	kgf*cm	ft.*lbft.*lbf
Cruise control main switch x Steering wheel	2.4	24	21 in.*lbf
Clutch switch assembly x Clutch pedal	15	155	11
Maine body ECU (Driver side j/b) x Instrument panel reinforcement assembly	8.4	86	74 in.*lbf
Instrument panel side bracket x Maine body ECU (Driver side j/b)	8.4	86	74 in.*lbf
Instrument panel side bracket x Body	8.4	86	74 in.*lbf
Negative battery terminal x Battery	3.9	40	35 in.*lbf

LIGHTING

SERVICE DATA

Headlight relay	3 - 5: 10 kΩ or higher 3 - 5: Below 1 Ω (Battery voltage applied to terminals 1 and 2)
Headlight dimmer relay	3 - 4: Below 1 Ω 3 - 4: 10 kΩ or higher (Battery voltage applied to terminals 1 and 2) 3 - 5: 10 kΩ or higher 3 - 5: Below 1 Ω (Battery voltage applied to terminals 1 and 2)
Taillight relay	3 - 5: 10 kΩ or higher 3 - 5: Below 1 Ω (Battery voltage applied to terminals 1 and 2)

TORQUE SPECIFICATIONS

Part Tightened	N*m	kgf*cm	ft.*lbf
Headlight assembly x Front combination light assembly	5.4	55	48 in.*lbf
Rear combination light assembly x Body	6.0	61	53 in.*lbf
Front door courtesy switch x Access door	7.0	71	62 in.*lbf
Access panel upper lock assembly x Access door	12	122	9
Access panel lower lock assembly x Access door	5.0	51	44 in.*lbf
Back door courtesy switch x Body	7.0	71	62 in.*lbf
Negative battery terminal x Battery	3.9	40	35 in.*lbf

WIPER AND WASHER

TORQUE SPECIFICATIONS

FRONT WIPER MOTOR

Part Tightened	N*m	kgf*cm	ft.*lbf
Front wiper motor x Front wiper link	7.5	76	66 in.*lbf
Front wiper motor and link x Cowl top panel outer	7.0	71	61 in.*lbf
Front wiper arm and blade assembly x Front wiper motor and link	25	255	18
Negative battery terminal x Battery	3.9	40	35 in.*lbf

REAR WIPER MOTOR

Part Tightened	N*m	kgf*cm	ft.*lbf
Rear wiper motor x Back door panel	5.5	56	49 in.*lbf
Rear wiper arm and blade assembly x Rear wiper motor	5.5	56	49 in.*lbf
Negative battery terminal x Battery	3.9	40	35 in.*lbf

WIPER SWITCH

Part Tightened	N*m	kgf*cm	ft.*lbf
Negative battery terminal x Battery	3.9	40	35 in.*lbf

WASHER MOTOR

Part Tightened	N*m	kgf*cm	ft.*lbf
Windshield washer jar assembly x Body	3.5	36	31 in.*lbf
Negative battery terminal x Battery	3.9	40	35 in.*lbf

DOOR LOCK

TORQUE SPECIFICATIONS

Part Tightened	N*m	kgf*cm	ft.*lbf
Front door lock x Front door panel	5.0	51	44 in.*lbf
Back door lock x Back door panel	5.0	51	44 in.*lbf
Negative battery terminal x Battery	3.9	40	35 in.*lbf

METER

TORQUE SPECIFICATIONS

Part Tightened	N*m	kgf*cm	ft.*lbf
Combination meter assembly x Instrument panel assembly	7.0	71	62 in.*lbf
Negative battery terminal x Battery	3.9	40	35 in.*lbf

AUDIO / VISUAL

SERVICE DATA

FRONT NO. 1 SPEAKER:

Item	Tester Connection	Specified Condition
Standard resistance	1 - 2	Approximately 4 Ω

FRONT NO. 2 SPEAKER:

SS

Item	Tester Connection	Specified Condition
Standard resistance	3 - 4	Approximately 8 Ω

REAR SPEAKER:

Item	Tester Connection	Specified Condition
Standard resistance	1 - 2	Approximately 8 Ω

ROOF SPEAKER:

Item	Tester Connection	Specified Condition
Standard resistance	1 - 2	Approximately 4 Ω

STEERING PAD SWITCH:

Item	Tester Connection	Condition	Specified Condition
Standard resistance	12 (AU1) - 10 (EAU)	All switches released	Approximately 100 kΩ
		SEEK+ switch: pushed in	Below 2.5 Ω or less
		SEEK- switch: pushed in	Approximately 329 Ω
		VOL+ switch: pushed in	Approximately 1000 Ω
		VOL- switch: pushed in	Approximately 3110 Ω
	11 (AU2) - 10 (EAU)	All switches released	Approximately 100 kΩ
		MODE switch: pushed in	Below 2.5 Ω or less

WOOFER SPEAKER SWITCH:

Item	Tester Connection	Condition	Specified Condition
Standard resistance	3 (IN) - 4 (OUT)	OFF	10 kΩ or higher
		ON	Below 1 Ω

TORQUE SPECIFICATIONS

RADIO RECEIVER:

Part Tightened	N*m	kgf*cm	ft.*lbf
Radio bracket x Radio receiver assembly	2.5	25	22 in.*lbf
Radio receiver assembly x Instrument panel sub-assembly	2.5	25	22 in.*lbf
Negative battery terminal x Battery	3.9	40	35 in.*lbf

FRONT NO. 1 SPEAKER:

Part Tightened	N*m	kgf*cm	ft.*lbf
Front No. 1 speaker assembly x Front door panel sub-assembly	2.5	25	22 in.*lbf
Negative battery terminal x Battery	3.9	40	35 in.*lbf

FRONT NO. 2 SPEAKER:

Part Tightened	N*m	kgf*cm	ft.*lbf
Front No. 2 speaker assembly x Front speaker bracket	8.1	85	72 in.*lbf
Front speaker bracket x Instrument panel sub-assembly	2.5	25	22 in.*lbf
Negative battery terminal x Battery	3.9	40	35 in.*lbf

REAR SPEAKER:

Part Tightened	N*m	kgf*cm	ft.*lbf
Rear speaker assembly x Speaker mounting bracket	8.1	85	72 in.*lbf
Speaker mounting bracket x Body	8.1	85	72 in.*lbf
Negative battery terminal x Battery	3.9	40	35 in.*lbf

ROOF SPEAKER:

Part Tightened	N*m	kgf*cm	ft.*lbf
Negative battery terminal x Battery	3.9	40	35 in.*lbf

AMPLIFIER BOX SPEAKER ASSEMBLY:

Part Tightened	N*m	kgf*cm	ft.*lbf
Amplifier box speaker assembly x Body	8.1	85	72 in.*lbf
Negative battery terminal x Battery	3.9	40	35 in.*lbf

RADIO ANTENNA CORD:

Part Tightened	N*m	kgf*cm	ft.*lbf
Front No. 2 speaker assembly x Instrument panel sub-assembly	2.5	25	22 in.*lbf
Negative battery terminal x Battery	3.9	40	35 in.*lbf

RADIO ANTENNA HOLDER:

Part Tightened	N*m	kgf*cm	ft.*lbf
Radio antenna holder assembly x Body	8.4	85	74 in.*lbf
Negative battery terminal x Battery	3.9	40	35 in.*lbf

RADIO ANTENNA POLE:

Part Tightened	N*m	kgf*cm	ft.*lbf
Radio antenna pole x Radio antenna holder assembly	3.3	35	29 in.*lbf

STEREO JACK ADAPTER ASSEMBLY:

Part Tightened	N*m	kgf*cm	ft.*lbf
Negative battery terminal x Battery	3.9	40	35 in.*lbf

STEERING PAD SWITCH:

Part Tightened	N*m	kgf*cm	ft.*lbf
Steering pad switch x Steering wheel assembly	2.4	25	21 in.*lbf
Negative battery terminal x Battery	3.9	40	35 in.*lbf

WOOFER SPEAKER SWITCH:

Part Tightened	N*m	kgf*cm	ft.*lbf
Negative battery terminal x Battery	3.9	40	35 in.*lbf

PARK ASSIST / MONITORING

SERVICE DATA

CLEARANCE WARNING BUZZER:

Item	Tester Connection	Specified Condition
Standard resistance	1 - 2	Approximately 1 kΩ

ULTRASONIC SENSOR:

SS

Item	Tester Connection	Specified Condition
Standard resistance	1 (E) - 2 (S)	8 to 12 kΩ

BACK SONAR SWITCH ASSEMBLY:

Item	Tester Connection	Condition	Specified Condition
Standard resistance	4 (ECU) - 6 (E)	OFF	Below 1 Ω
	3 (IG) - 6 (E)	ON	Below 1 Ω
	4 (ECU) - 6 (E)		Below 1 Ω

BACK SONAR SWITCH BULB:

Item	Specified Condition
Standard resistance	7 to 11 Ω at 20°C (68°F)

TORQUE SPECIFICATIONS

CLEARANCE WARNING ECU:

Part Tightened	N*m	kgf*cm	ft.*lbf
Clearance warning ECU assembly x Instrument panel upper bracket	12.5	125	9
Negative battery terminal x Battery	3.9	40	35 in.*lbf

CLEARANCE WARNING BUZZER:

Part Tightened	N*m	kgf*cm	ft.*lbf
Negative battery terminal x Battery	3.9	40	35 in.*lbf

ULTRASONIC SENSOR:

Part Tightened	N*m	kgf*cm	ft.*lbf
Negative battery terminal x Battery	3.9	40	35 in.*lbf

BACK SONAR SWITCH ASSEMBLY:

Part Tightened	N*m	kgf*cm	ft.*lbf
Negative battery terminal x Battery	3.9	40	35 in.*lbf

HORN

SERVICE DATA

HORN RELAY:

Item	Tester Connection	Specified Condition
Standard resistance	3 - 5	10 kΩ or higher
		Below 1 Ω (Battery voltage applied to terminals 1 and 2)

TORQUE SPECIFICATIONS

HORN RELAY:

Part Tightened	N*m	kgf*cm	ft.*lbf
Negative battery terminal x Battery	3.9	40	35

LOW PITCHED HORN:

Part Tightened	N*m	kgf*cm	ft.*lbf
Low pitched horn assembly x Body	9.8	100	7
Negative battery terminal x Battery	3.9	40	35

OTHER SYSTEM

SERVICE DATA

Inverter relay	3-5: 10 kΩ or higher 3-5: Below 1Ω (Battery voltage applied to terminals 1 and 2)

TORQUE SPECIFICATIONS

CLOCK

Part Tightened	N*m	kgf*cm	ft.*lbf
Negative battery terminal x Battery	3.9	40	35 in.*lbf

POWER OUTLET SOCKET

Part Tightened	N*m	kgf*cm	ft.*lbf
Negative battery terminal x Battery	3.9	40	35 in.*lbf

REAR POWER OUTLET SOCKET

Part Tightened	N*m	kgf*cm	ft.*lbf
Negative battery terminal x Battery	3.9	40	35 in.*lbf

VOLTAGE INVERTER

Part Tightened	N*m	kgf*cm	ft.*lbf
Voltage inverter x Body	8.5	87	75
Voltage inverter x Earth wire	6.9	70	61 in.*lbf
Negative battery terminal x Battery	3.9	40	35 in.*lbf

INVERTER MAIN SWITCH

Part Tightened	N*m	kgf*cm	ft.*lbf
Negative battery terminal x Battery	3.9	40	35 in.*lbf

WINDSHIELD / WINDOWGLASS

SERVICE DATA

Defogger relay	3 - 4: Below 1 Ω 3 - 4: 10 kΩ or higher (Battery voltage applied to terminals 1 and 2) 3 - 5: 10 kΩ or higher 3 - 5: Below 1 Ω (Battery voltage applied to terminals 1 and 2)

TORQUE SPECIFICATIONS

Part Tightened	N*m	kgf*cm	ft.*lbf
Power window regulator motor x Front door window regulator sub-assembly	5.4	55	48 in.*lbf
Back door glass x Back door hinge assembly	5.5	56	49 in.*lbf
Back window lock x Back door panel	5.0	51	44 in.*lbf
Spare disc wheel x Spare wheel carrier bracket sub-assembly	88	897	65
Negative battery terminal x Battery	3.9	40	35 in.*lbf

MIRROR

TORQUE SPECIFICATIONS

Part Tightened	N*m	kgf*cm	ft.*lbf
Outer rear view mirror x Front door panel	8.0	82	71 in.*lbf
Negative battery terminal x Battery	3.9	40	35 in.*lbf

INSTRUMENT PANEL

TORQUE SPECIFICATIONS

Part Tightened	N*m	kgf*cm	ft.*lbf
Front passenger airbag assembly x Instrument panel reinforcement	20	205	15
Combination meter assembly x Instrument panel assembly	7.0	71	62 in.*lbf
Negative battery terminal x Battery	3.9	40	35 in.*lbf

SEAT

TORQUE SPECIFICATIONS

FRONT SEAT ASSEMBLY:

Part Tightened	kgf*cm	N*m	ft.*lbf
Seat position sensor x Front seat adjuster sub-assembly (for Driver Side)	8.0	80	71 in.*lbf
Front seatback cover x Front seat adjuster sub-assembly (w/ Front Seat Side Airbag)	5.5	55	49 in.*lbf
Front seat armrest assembly x Front seat adjuster sub-assembly (for Driver Side)	38	385	28
Front seat assembly x Body	37	375	27
Negative battery terminal x Battery	3.9	40	35 in.*lbf

REAR SEAT ASSEMBLY (for LH Side):

Part Tightened	kgf*cm	N*m	ft.*lbf
Rear seatback lock assembly x Rear seatback frame sub-assembly	18	185	13
Rear seat cushion hinge sub-assembly x Rear seat cushion frame sub-assembly	18	185	13
Rear seatback assembly x Rear seatback hinge sub-assembly	37	375	27
Rear seat cushion assembly x Body	37	375	27

REAR SEAT ASSEMBLY (for RH Side):

Part Tightened	kgf*cm	N*m	ft.*lbf
Rear seatback lock assembly x Rear seatback frame sub-assembly	18	185	13
Rear seat cushion hinge sub-assembly x Rear seat cushion frame sub-assembly	18	185	13
Rear seatback assembly x Rear seatback hinge sub-assembly	37	375	27
Rear center seat outer belt assembly x Body (for Anchor Plate)	42	430	31
Rear seat cushion assembly x Body	37	375	27

ENGINE HOOD / DOOR

TORQUE SPECIFICATIONS

Part Tightened	N*m	kgf*cm	ft.*lbf
Hood hinge assembly x Hood sub-assembly	13	133	10
Hood lock assembly x Radiator support sub-assembly	8.0	82	71 in.*lbf
Front door upper hinge assembly x Body	26	265	19
Front door upper hinge assembly x Front door panel	26	265	19
Front door lower hinge assembly x Body	26	265	19
Front door lower hinge assembly x Front door panel	26	265	19
Access panel lock striker plate assembly x Access door panel	23	235	17
Front door outside handle frame sub-assembly x Front door panel	7.0	71	62 in.*lbf
Front door outside handle cover x Front door outside handle frame sub-assembly	5.5	56	49 in.*lbf
Front door window regulator sub-assembly x Front door panel	8.0	82	71 in.*lbf
Front door glass sub-assembly x Front door window regulator sub-assembly	8.0	82	71 in.*lbf
Front door lower frame bracket garnish x Front door panel	5.5	56	49 in.*lbf
Front door window frame rear lower x Front door panel	5.5	56	49 in.*lbf
Front door frame sub-assembly front lower x Front door panel	5.5	56	49 in.*lbf
Front door check assembly x Front door panel	5.5	56	49 in.*lbf
Front door check assembly x Body	30	306	22
Rear door upper hinge assembly x Body	26	265	19
Rear door upper hinge assembly x Access door panel	26	265	19
Rear door lower hinge assembly x Body	26	265	19
Rear door lower hinge assembly x Access door panel	26	265	19
Access panel upper lock striker assembly x Body	23	235	17
Access panel lock striker plate assembly x Body	23	235	17
Access panel lower lock stop x Access door panel	23	235	17
Access panel check assembly x Access door panel	5.5	56	49 in.*lbf
Access panel check assembly x Body	30	306	22
Access panel lock cancel lever assembly x Access door panel	5.0	51	44 in.*lbf
Access panel lock remote control assembly x Access door panel	12	122	9
Access panel inside handle sub-assembly x Access door panel	12	122	9
Front seat outer belt assembly (floor side) x Access door panel	42	428	31
Back door hinge assembly (door side) x Body	26	265	19
Back door hinge assembly (door side) x Back door panel	42	428	31
Back door lock striker plate assembly x Body	23	235	17
Back door side female stopper sub-assembly x Back door panel	7.0	71	62 in.*lbf
Back door damper stay lower bracket x Back door panel	20	199	14
Back door stay upper bracket LH x Back door panel	7.0	71	62 in.*lbf
Back door stay upper bracket RH x Back door panel	7.0	71	62 in.*lbf
Back door hinge assembly (glass side) x Back door panel	20	199	14
Spare wheel carrier bracket sub-assembly x Back door panel	48	489	35
Spare disc wheel x Spare wheel carrier bracket sub-assembly	88	897	65
Negative battery terminal x Battery	3.9	40	35 in.*lbf

EXTERIOR

TORQUE SPECIFICATIONS

FRONT BUMPER:

Part Tightened	N*m	kgf*cm	ft.*lbf
Front valance lower panel x Front bumper cover	8.0	80	71 in.*lbf
Front bumper extension x Body	65	665	48
Front bumper reinforcement x Front bumper extension	65	665	48
Front bumper upper retainer x Body	8.0	80	71 in.*lbf
Front bumper side support x Body	3.0	30	27 in.*lbf
Front bumper cover x Body (for Screw)	3.0	30	27 in.*lbf
Front bumper cover x Body (for Bolt)	8.0	80	71 in.*lbf
Radiator grille x Body	3.0	30	27 in.*lbf

SS

REAR BUMPER:

Part Tightened	N*m	kgf*cm	ft.*lbf
Rear bumper bar bracket x Body	8.0	80	71 in.*lbf
Rear bumper side support sub-assembly x Body	8.0	80	71 in.*lbf
Rear bumper side stay x Body	8.0	80	71 in.*lbf
Rear bumper upper retainer x Body	3.0	30	27 in.*lbf
Rear bumper end retainer x Body	3.0	30	27 in.*lbf
Rear bumper cover x Body (for Bolt)	8.0	80	71 in.*lbf
Rear bumper cover x Body (for Screw)	3.0	30	27 in.*lbf
Negative battery terminal x Battery	3.9	40	35 in.*lbf

REAR SPOILER:

Part Tightened	N*m	kgf*cm	ft.*lbf
Rear spoiler cover x Back door panel sub-assembly	3.0	30	27 in.*lbf
Negative battery terminal x Battery	3.9	40	35 in.*lbf

FRONT DOOR GLASS WEATHERSTRIP:

Part Tightened	N*m	kgf*cm	ft.*lbf
Outer rear view mirror assembly x Front door panel sub-assembly	8.0	82	71 in.*lbf
Negative battery terminal x Battery	3.9	40	35 in.*lbf

ROOF DRIP SIDE FINISH MOULDING:

Part Tightened	N*m	kgf*cm	ft.*lbf
Front pillar outer garnish x Body	5.0	50	44 in.*lbf
Roof drip side finish moulding retainer x Body	5.0	50	44 in.*lbf

OUTSIDE MOULDING:

Part Tightened	N*m	kgf*cm	ft.*lbf
Spare tire x Spare wheel carrier bracket sub-assembly	88	897	65
Access door outside moulding sub-assembly x Body	5.0	50	44 in.*lbf
Front door outside moulding sub-assembly x Body	5.0	50	44 in.*lbf
Quarter outside moulding sub-assembly x Body	5.0	50	44 in.*lbf
Front fender moulding sub-assembly x Body	5.0	50	44 in.*lbf
Rocker panel moulding x Body	5.0	50	44 in.*lbf
Negative battery terminal x Battery	3.9	40	35 in.*lbf

FENDER PANEL MOULDING:

Part Tightened	N*m	kgf*cm	ft.*lbf
Quarter panel mudguard x Body	5.0	50	44 in.*lbf

Part Tightened	N*m	kgf*cm	ft.*lbf
Front fender mudguard x Body	5.0	50	44 in.*lbf
Negative battery terminal x Battery	3.9	40	35 in.*lbf

SIDE STEP:

Part Tightened	N*m	kgf*cm	ft.*lbf
No. 3 side step bracket x Side step sub-assembly	12.5	125	9
No. 2 side step bracket x Side step sub-assembly	12.5	125	9
No. 1 side step bracket x Side step sub-assembly	12.5	125	9
Side step sub-assembly x Body	20	200	14

BACK DOOR OUTSIDE GARNISH:

Part Tightened	N*m	kgf*cm	ft.*lbf
Spare tire x Spare wheel carrier bracket sub-assembly	88	897	65
Back door outside garnish sub-assembly x Back door panel sub-assembly	6.0	60	53 in.*lbf
Negative battery terminal x Battery	3.9	40	35 in.*lbf

FRONT DOOR BLACK OUT TAPE:

Part Tightened	N*m	kgf*cm	ft.*lbf
Negative battery terminal x Battery	3.9	40	35 in.*lbf

INTERIOR

TORQUE SPECIFICATIONS

ROOF HEADLINING:

Part Tightened	N*m	kgf*cm	ft.*lbf
Rear seat outer belt assembly x Body (for Anchor Plate)	42	430	31
Negative battery terminal x Battery	3.9	40	35 in.*lbf

OUTSIDE VEHICLE

GENERAL MAINTENANCE

Performing the following maintenance checks on the vehicle is the owner's responsibility. The owner may perform the maintenance or take the vehicle to a service center. Check the parts of the vehicle described below on a daily basis. In most cases, special tools are not required. It is recommended that the owner performs these checks. The procedures for general maintenance are as follows.

1. **GENERAL NOTES**
   - Maintenance requirements vary depending on the country.
   - Check the maintenance schedule in the owner's manual supplement.
   - Following the maintenance schedule is mandatory.
   - Determine the appropriate time to service the vehicle using either miles driven or months elapsed, whichever reaches the specification first.
   - Maintain similar intervals between periodic maintenance, unless otherwise noted.
   - Failing to check each vehicle part could lead to poor engine performance and increase exhaust emissions.
2. **TIRES**
   (a) Check the tire inflation pressure with a gauge. Make adjustments if necessary.
   (b) Check the surfaces of the tires for cuts, damage or excessive wear.
3. **WHEEL NUTS**
   (a) Check for nuts that are loose or missing. Tighten them if necessary.
4. **TIRE ROTATION (See page TW-1)**
5. **WINDSHIELD WIPER BLADES**
   (a) Check the blades for wear or cracks whenever they are unable to wipe the windshield clean. Replace them if necessary.
6. **FLUID LEAKS**
   (a) Check under the vehicle for leaking fuel, oil, water and other fluids.
   NOTICE:
   If you smell gasoline fumes or notice any leaks, locate the cause and correct it.
7. **DOORS AND ENGINE HOOD**
   (a) Check that all of the doors and the hood operate smoothly and that all the latches lock securely.
   (b) When the primary latch is released, check that the engine hood secondary latch prevents the hood from opening.

INSIDE VEHICLE

GENERAL MAINTENANCE

Performing the following maintenance checks on the vehicle is the owner's responsibility. The owner may perform the maintenance or take the vehicle to a service center. Check the parts of the vehicle described below on a daily basis. In most cases, special tools are not required. It is recommended that the owner performs these checks. The procedures for general maintenance are as follows.

1. **GENERAL NOTES**
   - Maintenance requirements vary depending on the country.
   - Check the maintenance schedule in the owner's manual supplement.
   - Following the maintenance schedule is mandatory.
   - Determine the appropriate time to service the vehicle using either miles driven or months elapsed, whichever reaches the specification first.
   - Maintain similar intervals between periodic maintenance, unless otherwise noted.
   - Failing to check each vehicle part could lead to poor engine performance and increase exhaust emissions.
2. **LIGHTS**
   (a) Check that the headlights, stop lights, taillights, turn signal lights, and other lights illuminate or blink properly. Also, check if they have enough brightness.
   (b) Check that the headlights are aimed properly.
3. **WARNING LIGHTS AND BUZZERS**
   (a) Check that all the warning lights and buzzers are working.
4. **HORNS**
   (a) Check that the horn is working.
5. **WINDSHIELD GLASS**
   (a) Check for scratches, pits or abrasions.
6. **WINDSHIELD WIPERS AND WASHER**
   (a) Check that the windshield washers are aimed properly. Also, check that the center stream of washer fluid sprays on the windshield within the operating range of the wipers.
   (b) Check if the wipers streak or not.
7. **WINDSHIELD DEFROSTER**
   (a) When the heater or air conditioning is on the defroster setting, check if air comes out of the defroster outlet.
8. **REAR VIEW MIRROR**
   (a) Check that the rear view mirror is securely mounted.

9. SUN VISORS

(a) Check that the sun visors move freely and are securely mounted.

10. STEERING WHEEL

(a) Check that the steering wheel has the proper amount of free play. Also check for steering difficulty, free play in the steering wheel and unusual noises.

11. SEATS

(a) Check that all front seat controls such as seat adjusters, seatback recliner, etc. operate smoothly.
(b) Check that all latches lock securely in any position.
(c) Check that the headrests move up and down smoothly and that the locks hold securely in any latch position.
(d) For folding-down rear seatbacks, check that the latches look securely.

12. SEAT BELTS

(a) Check that the seat belt system such as the buckles, retractors and anchors operate properly and smoothly.
(b) Check that the belt webbing is not cut, frayed, worn or damaged. Replace if necessary.

13. ACCELERATOR PEDAL

(a) Check that the accelerator pedal operates smoothly. In other words, check that the pedal does not have uneven pedal resistance or become stuck in certain positions.

14. BRAKE PEDAL

(a) Check that the brake pedal operates smoothly.
(b) Check that the pedal has the proper reserve distance and free play.
(c) Start the engine and check the brake booster function.

15. BRAKES

(a) In a safe place, check that the vehicle remains straight when applying the brakes.

16. PARKING BRAKE

(a) Check that the parking brake lever has the proper amount of travel (see page PB-4).
(b) On a safe incline, check that the vehicle is held securely with only the parking brake applied.

17. AUTOMATIC TRANSMISSION "PARK" MECHANISM

(a) Check the lock release button of the shift lever for proper and smooth operation.
(b) When the shift lever is in the P position and all brakes are released on a low incline, check that the vehicle is stable.

MA

UNDER HOOD

GENERAL MAINTENANCE

1. GENERAL NOTES

- Maintenance requirements vary depending on the country.
- Check the maintenance schedule in the owner's manual supplement.
- Following the maintenance schedule is mandatory.
- Determine the appropriate time to service the vehicle using either miles driven or time elapsed, whichever reaches the specification first.
- Maintain similar intervals between periodic maintenance, unless otherwise noted.
- Failing to check each vehicle part could lead to poor engine performance and increase exhaust emissions.

2. WINDSHIELD WASHER FLUID

(a) Check that there is sufficient fluid in the tank.

3. ENGINE COOLANT LEVEL

(a) Check that the coolant level is between the "FULL" and "LOW" lines on the see-through reservoir.

4. RADIATOR AND HOSES

(a) Check that the front of the radiator is clean and not blocked by leaves, dirt or bugs.

(b) Check the hoses for cracks, kinks, rot or loose connections.

5. BATTERY ELECTROLYTE LEVEL

(a) Check that the electrolyte level of all the battery cells is between the upper and lower level lines on the case.

6. BRAKE FLUID LEVEL

(a) Check that the brake fluid levels are near the upper level lines on the see-through reservoirs.

7. ENGINE DRIVE BELT

(a) Check the drive belt for fraying, cracks, wear or oiliness.

8. ENGINE OIL LEVEL

(a) Check the level on the dipstick with the engine stopped.

9. INSPECT POWER STEERING FLUID LEVEL

(a) Check the level on the dipstick.
NOTICE:
The level should be in the "HOT" or "COLD" range depending on the fluid temperature.

10. AUTOMATIC TRANSMISSION FLUID LEVEL

(a) Check the level of the automatic transmission fluid.

Type	See Procedure
A750E	See page AT-141
A750F	See page AT-148

11. EXHAUST SYSTEM

(a) Visually inspect for cracks, holes or loose supports.
HINT:
If any change in the sound of the exhaust or smell of the exhaust fumes is noticed, have the cause inspected and repaired.

ENGINE

GENERAL MAINTENANCE

HINT:
Inspect these items when the engine is cold.

1. **INSPECT TIMING CHAIN (See page EM-27)**
2. **INSPECT VALVE CLEARANCE (See page EM-9)**
3. **INSPECT DRIVE BELT (See page EM-6)**
4. **REPLACE ENGINE OIL AND OIL FILTER (See page LU-4)**
5. **REPLACE ENGINE COOLANT (See page CO-3)**
6. **INSPECT EXHAUST PIPES AND MOUNTINGS**
   (a) Visually inspect the pipes, hangers and connections for severe corrosion, leaks or damage.
7. **INSPECT AIR CLEANER FILTER**
   (a) Remove the air cleaner case and air cleaner filter.
   (b) Visually check that the air cleaner filter is not excessively damaged or oily.
   If necessary, replace the air cleaner filter with a new one.
   (c) Clean the filter with compressed. First blow from the inside thoroughly, then blow off the outside of the filter.
   (d) Reinstall the air cleaner filter and air cleaner case.
8. **INSPECT FUEL LINES, CONNECTIONS AND FUEL TANK VAPOR VENT SYSTEM HOSES AND FUEL TANK BAND**
   (a) Visually inspect the fuel lines for cracks, leakage loose connections, deformation or tank band looseness.
9. **INSPECT GASKET IN FUEL TANK CAP**
   (a) Visually check if the cap and / or gasket are deformed or damaged.
   If necessary, repair or replace the cap.
10. **REPLACE SPARK PLUGS (See page IG-5)**
11. **INSPECT CHARCOAL CANISTER**
    HINT:
    For vehicles registered in California, Massachusetts and New York only.
    (a) Check the canister for cracks or damage (see page EC-10).

BRAKE

GENERAL MAINTENANCE

1. INSPECT BRAKE LINE PIPES AND HOSES

HINT:
Check in a well lighted area. Check the entire circumference and length of the brake hoses using a mirror as necessary. Turn the front wheels fully right or left before checking the front brakes.

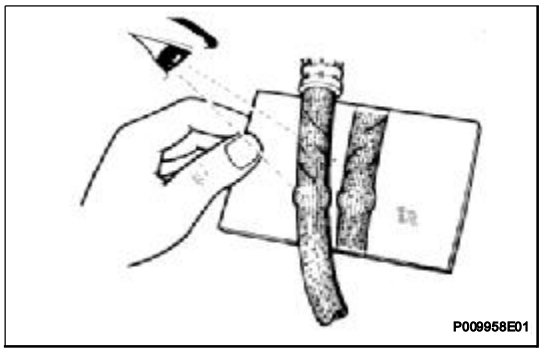

(a) Check all brake lines and hoses for:
- Damage
- Wear
- Deformation
- Cracks
- Corrosion
- Leaks
- Bends
- Twists

(b) Check all clamps for tightness and connections for leakage.

(c) Check that the hoses and lines are clear of sharp edges, moving parts and the exhaust system.

(d) Check that the lines installed in the grommets pass through the center of the grommets.

2. INSPECT FRONT BRAKE

(a) Check the front brake pads and discs (see page BR-43).

3. INSPECT REAR BRAKE

(a) Check the rear brake pads and discs (see page BR-51).

CHASSIS

GENERAL MAINTENANCE

1. INSPECT STEERING LINKAGE

(a) Check the steering linkage for looseness or damage.
  (1) Check that the tie rod ends do not have excessive play.
  (2) Check that the dust seals and boots are not damaged.
  (3) Check that the boot clamps are not loose.

(b) Inspect the dust cover for damage.

2. INSPECT STEERING GEAR HOUSING OIL

(a) Check the steering gear housing for oil leakage. If leakage is found, check for the cause and repair it.

3. INSPECT BALL JOINT AND DUST COVER

(a) Jack up the front of the vehicle and support it with stands.

(b) Make sure the front wheels are in a straight-ahead position, and depress the brake pedal.

(c) Jack up the lower suspension arm until there is about half a load on the front suspension.

(d) Inspect the dust cover for damage.

4. INSPECT DRIVE SHAFT BOOTS (for 4WD)

(a) Inspect the drive shaft boots for clamp looseness, grease leakage or damage.

5. INSPECT TRANSFER OIL (for 4WD)

(a) Remove the filler plug and feel inside the hole with your finger. Check that the oil comes to within 5 mm (0.20 in.) of the bottom edge of the hole. If the level is low, add oil until it begins to run out of the filler hole.

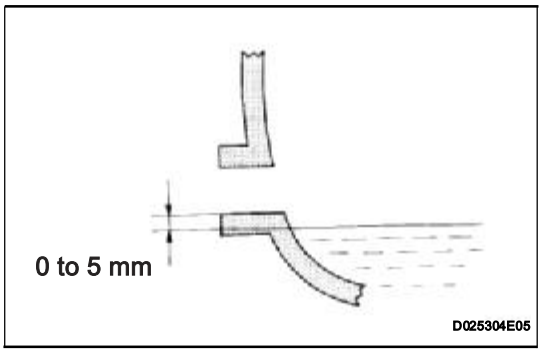

6. INSPECT DIFFERENTIAL OIL

(a) Remove the filler plug and feel inside the hole with your finger. Check that the oil comes to within 5 mm (0.20 in.) of the bottom edge of the hole. If the level is low, add oil until it begins to run out of the filler hole.

7. REPLACE AUTOMATIC TRANSMISSION FLUID LEVEL

(a) Check the level of the automatic transmission fluid.

Type	See Procedure
A750E	See page AT-141
A750F	See page AT-148

8. LUBRICATE PROPELLER SHAFT AND TIGHTEN BOLTS

(a) 4WD:

(1) Lubricate propeller shaft, referring to the lubrication chart. Before pumping in grease, wipe off any mud and dust on the grease fitting.

Grease grade:

Spider:

Lithium base chassis grease (NLGI No.2)

Slide yoke and double-cardan joint:

Molybdenum diaulphide lithium base chassis grease (NLGI No.2)

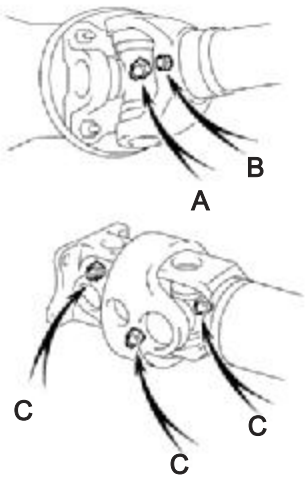

A: Propeller Shaft Spider

B: Propeller Shaft Sliding Yoke

C: Double-Cardan Joint

P B065528E01

(b) Tighten the bolts of the propeller shaft.

Type	See Procedure
Front propeller shaft	See page PR-6
Rear propeller shaft (for 2WD)	See page PR-14
Rear propeller shaft (for 4WD)	See page PR-14

9. INSPECT MANUAL TRANSMISSION OIL (See page MT-2)

BODY

GENERAL MAINTENANCE

1. INSPECT BOLTS AND NUTS ON CHASSIS AND BODY

(a) In addition to the scheduled maintenance items, check for loose or missing bolts and nuts of the following.
Canada:
- Steering system
- Drive train
- Suspension system
- Fuel tank mounts
- Engine mounts, etc.

2. FINAL INSPECTION

(a) Check the operation of the body parts:
(1) Hood:
- Auxiliary catch operates properly
- Hood locks securely when closed

(2) Front and rear doors:
- Door locks operate properly
- Doors close properly

(3) Back door:
- Door lock operates properly

(4) Seats:
- Seat adjusts easily and locks securely in any position
- Front seatback locks securely in any position
- Folding down rear seatbacks lock securely.

(b) Be sure to deliver a clean car. Especially check:
- Steering wheel
- Shift lever knob
- All switch knobs
- Door handles
- Seats

SFI SYSTEM

PRECAUTION

1. **INITIALIZATION**

   NOTICE:
   - **Perform the RESET MEMORY (AT initialization) when replacing the automatic transmission assembly, engine assembly or ECM (See page AT-19).**
   - **Perform the REGISTRATION (VIN registration) when replacing the ECM (See page ES-15).**
   - **If the ECM has been replaced or RESET MEMORY (AT initialization) has been performed, set up the function of the ATF (Automatic Transmission Fluid) temperature warning light (See page AT-19).**

   HINT:
   Initialization can not be completed by only removing the battery.

2. **FOR USING INTELLIGENT TESTER**

   CAUTION:
   Observe the following items for safety reasons:
   - Read its instruction books before using the tester.
   - Prevent the tester cable from being caught on the pedals, shift lever and steering wheel when driving with the tester connected to the vehicle.
   - When driving the vehicle for testing purposes using the tester, two persons are required. One is for driving the vehicle, and the other operates the tester.

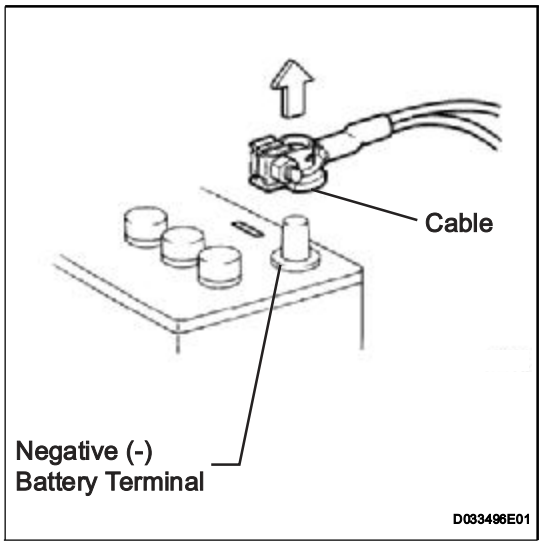

3. **DISCONNECT AND RECONNECT CABLE OF NEGATIVE BATTERY TERMINAL**
   (a) Before performing electronic work, disconnect the cable from the negative (-) battery terminal in order to prevent it from shorting and burning out.
   (b) Before disconnecting and reconnecting the battery cable, turn the ignition switch OFF and the headlight dimmer switch OFF. Then loosen the terminal nut completely. Do not damage the cable or terminal.
   (c) When the battery cable is disconnected, the clock and radio settings and stored DTCs are erased. Therefore, before disconnecting the battery cable, make a notes of them.

NOTICE:
When the cable is disconnected from the negative (-) battery terminal, initialize the following system(s) after the cable is reconnected.

System name	See procedure
METER / GAUGE SYSTEM	ME-10

DEFINITION OF TERMS

Terms	Definitions
Monitor Description	Description of what ECM monitors and how detects malfunctions (monitoring purpose and details)
Related DTCs	A group of diagnostic trouble codes that are output by ECM based on same malfunction detection logic.
Typical Enabling Conditions	Preconditions that allow ECM to detect malfunctions. With all preconditions satisfied, ECM sets DTC when monitored value(s) exceeds malfunction threshold(s)
Sequence of Operation	Order of monitor priority, applied if multiple sensors and components involved in single malfunction detection process. Each sensor and component monitored in turn and not monitored until previous detection operation completed.
Required Sensors/Components	Sensors and components used by ECM to detect each malfunction.
Frequency of Operation	Number of times ECM checks for each malfunction during each driving cycle. "Once per driving cycle" means ECM only performs checks for that malfunction once during single driving cycle. "Continuous" means ECM performs checks for that malfunction whenever enabling conditions met.
Duration	Minimum time for which ECM must detect continuous deviation in monitored value(s) in order to set DTC. Timing begins when Typical Enabling Conditions met.
Malfunction Thresholds	Values, beyond which, ECM determines malfunctions exist and sets DTCs.
MIL Operation	Timing of MIL illumination after defect detected. "Immediate" means ECM illuminates MIL as soon as malfunction detected. "2 driving cycles" means ECM illuminates MIL if same malfunction detected second time during next sequential driving cycle.

PARTS LOCATION

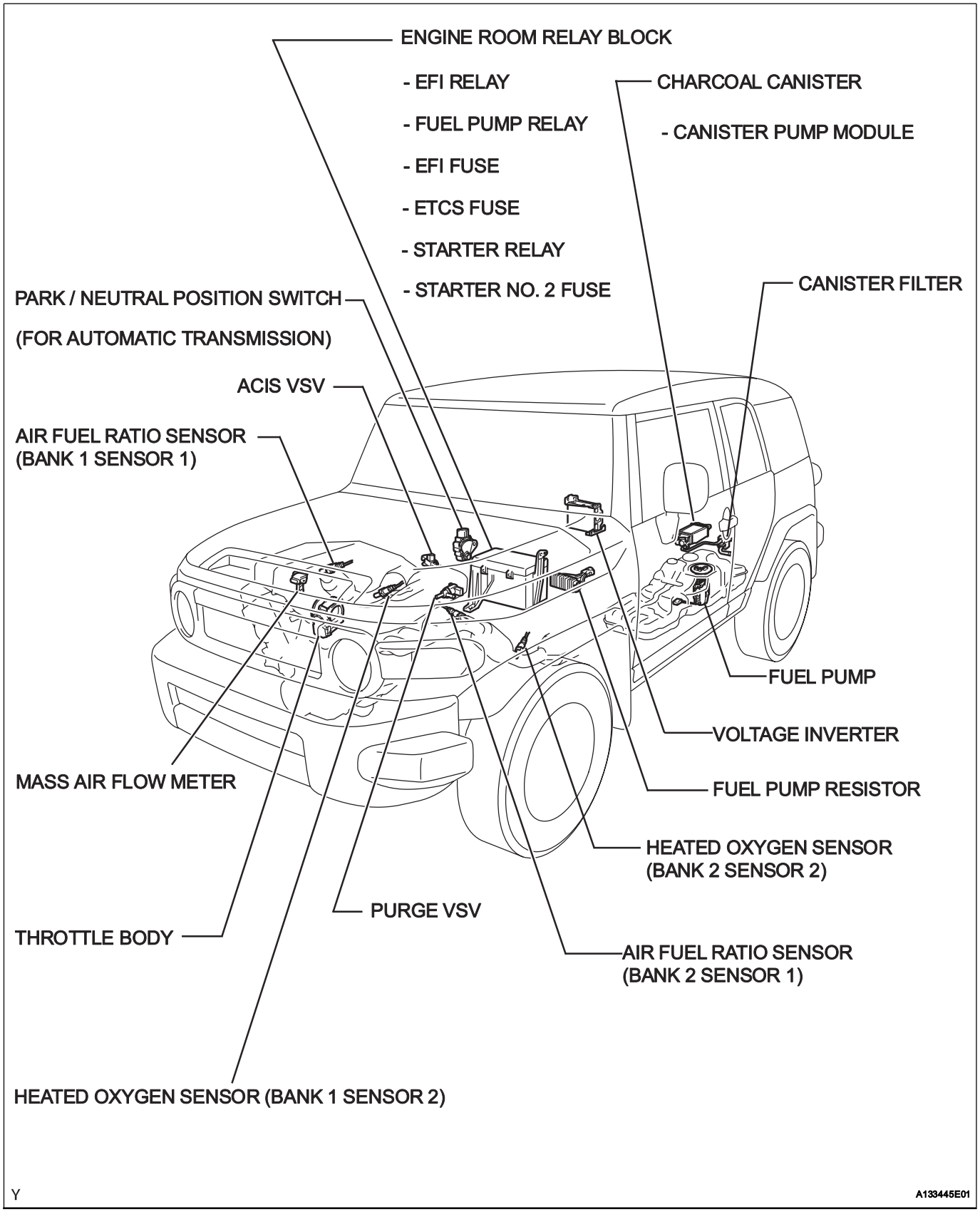

ES

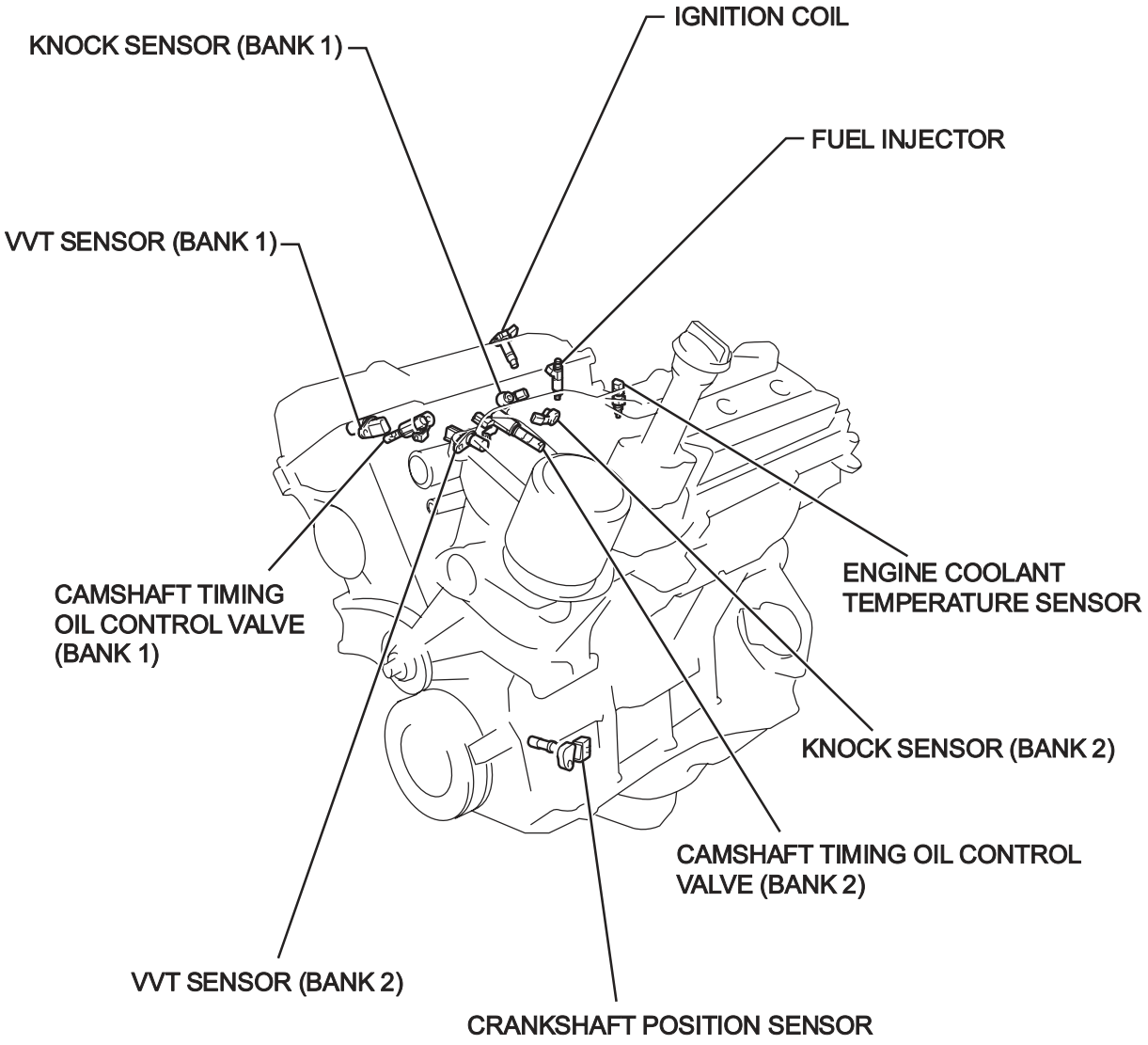

Y

A115960E02

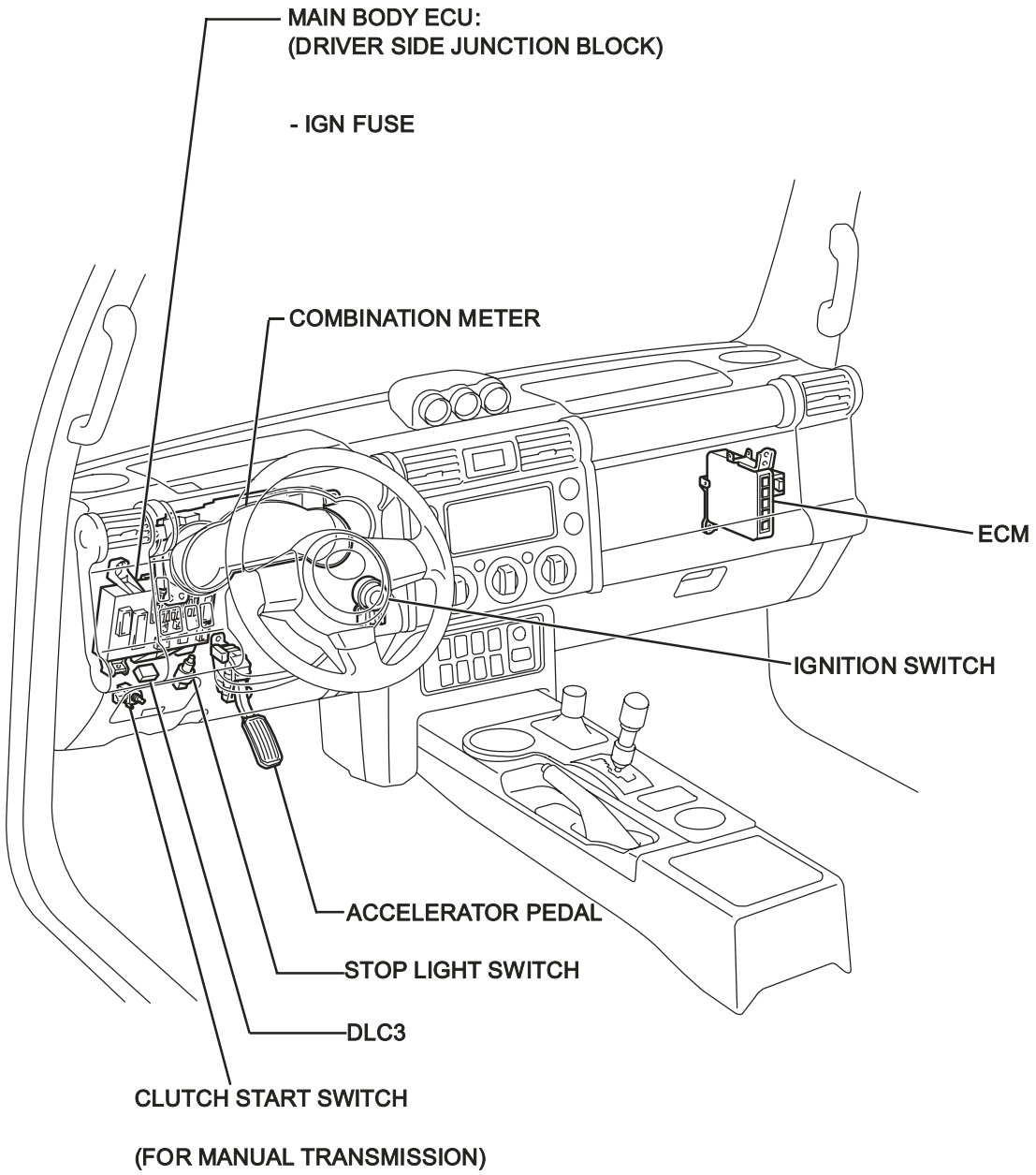

Y

A133444E02

SYSTEM DIAGRAM

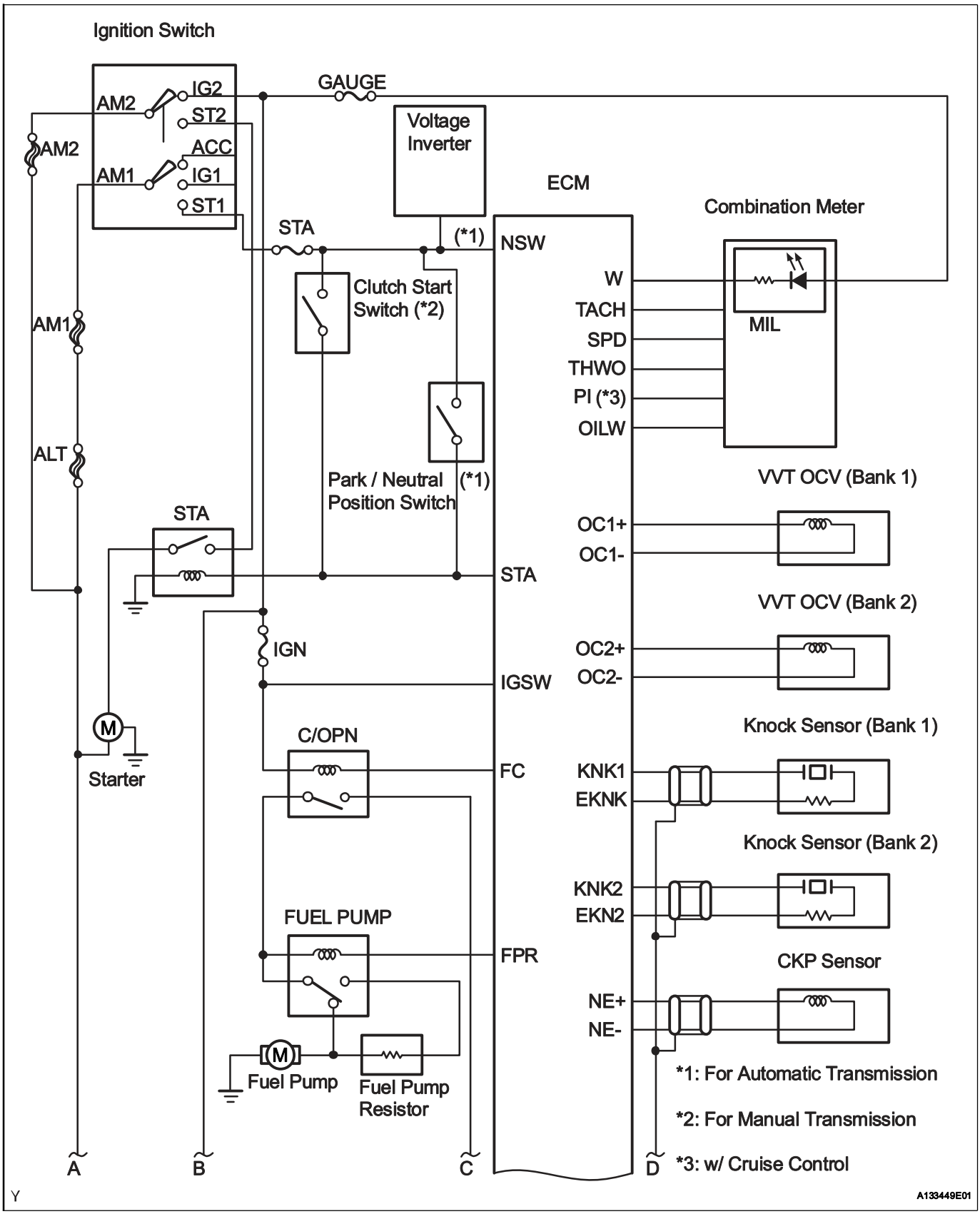

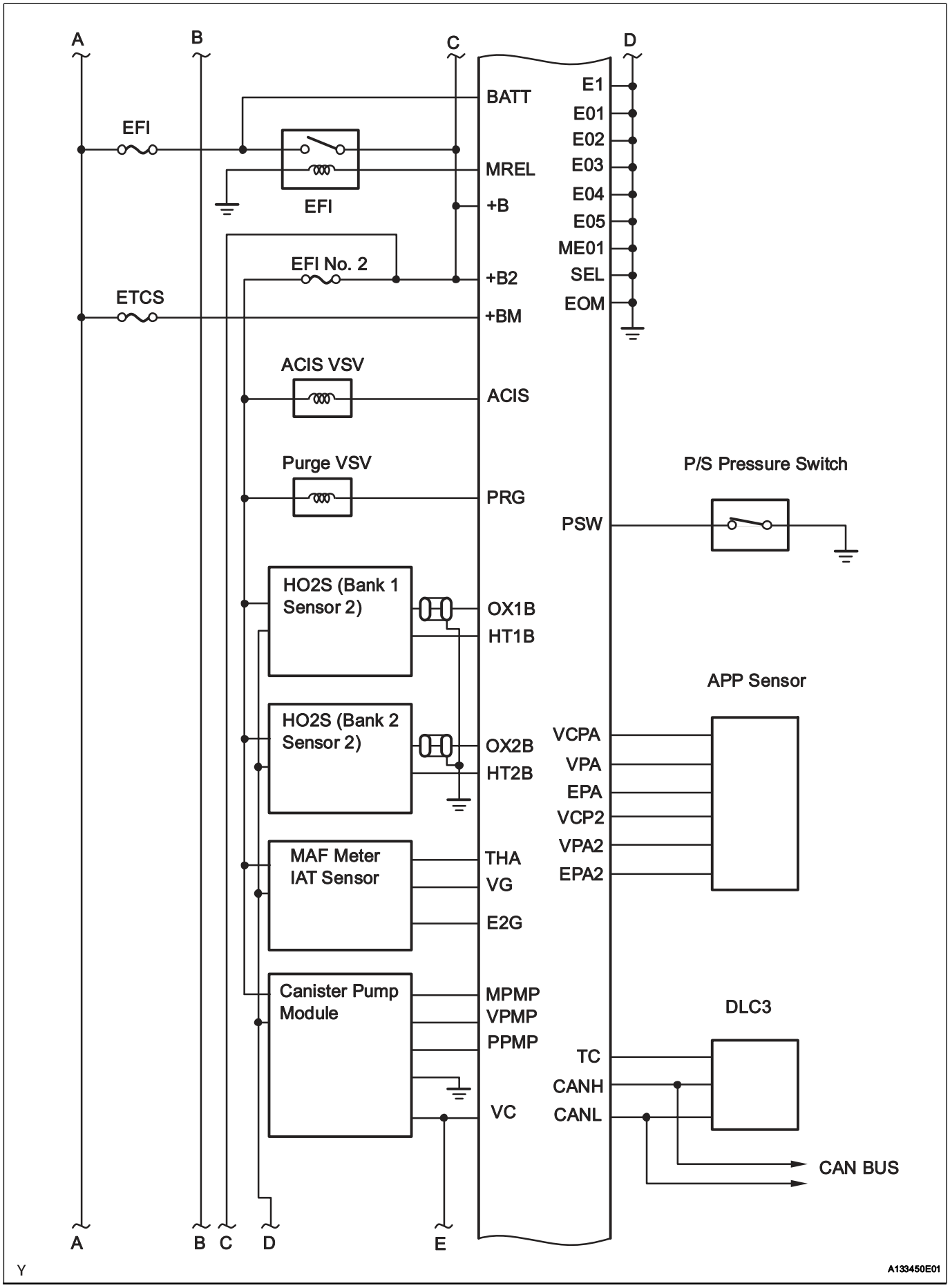
A
B
C
D
EFI
EFI
EFI No. 2
ETCS
ACIS VSV
Purge VSV
HO2S (Bank 1 Sensor 2)
HO2S (Bank 2 Sensor 2)
MAF Meter IAT Sensor
Canister Pump Module
BATT
MREL
+B
+B2
+BM
ACIS
PRG
OX1B
HT1B
OX2B
HT2B
THA
VG
E2G
MPMP
VPMP
PPMP
VC
E1
E01
E02
E03
E04
E05
ME01
SEL
EOM
PSW
P/S Pressure Switch
APP Sensor
VCPA
VPA
EPA
VCP2
VPA2
EPA2
DLC3
TC
CANH
CANL
CAN BUS
E
Y
A133450E01

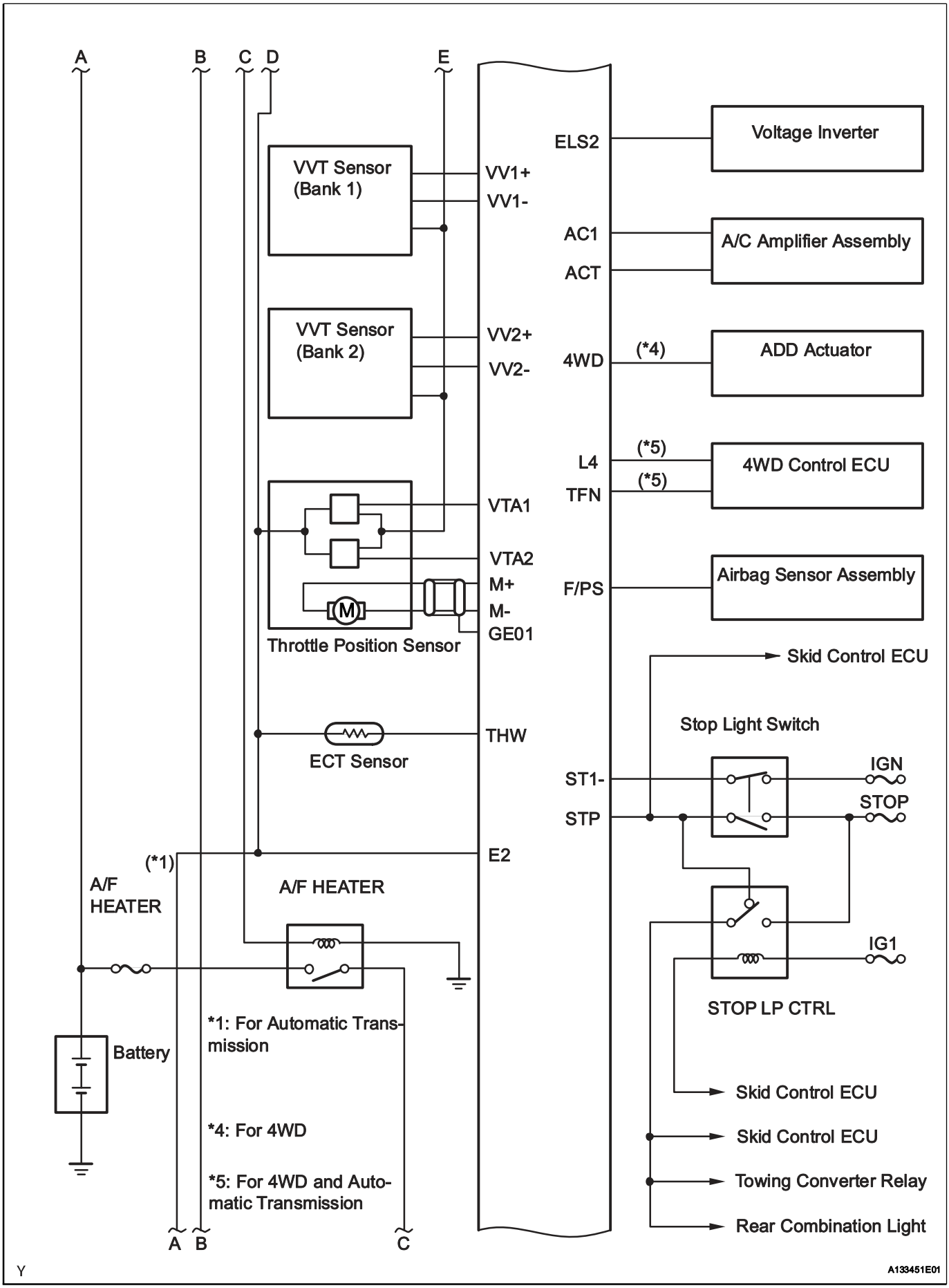
A
B
C
D
E
VVT Sensor (Bank 1)
VVT Sensor (Bank 2)
VV1+
VV1-
VV2+
VV2-
ELS2
AC1
ACT
4WD
L4
TFN
F/PS
Voltage Inverter
A/C Amplifier Assembly
ADD Actuator
4WD Control ECU
Airbag Sensor Assembly
(*4)
(*5)
(*5)
VTA1
VTA2
M+
M-
GE01
M
Throttle Position Sensor
Skid Control ECU
Stop Light Switch
THW
ECT Sensor
ST1-
STP
IGN
STOP
E2
(*1)
A/F HEATER
A/F HEATER
IG1
STOP LP CTRL
Battery
*1: For Automatic Transmission
*4: For 4WD
*5: For 4WD and Automatic Transmission
Skid Control ECU
Skid Control ECU
Towing Converter Relay
Rear Combination Light
A
B
C
Y
A133451E01

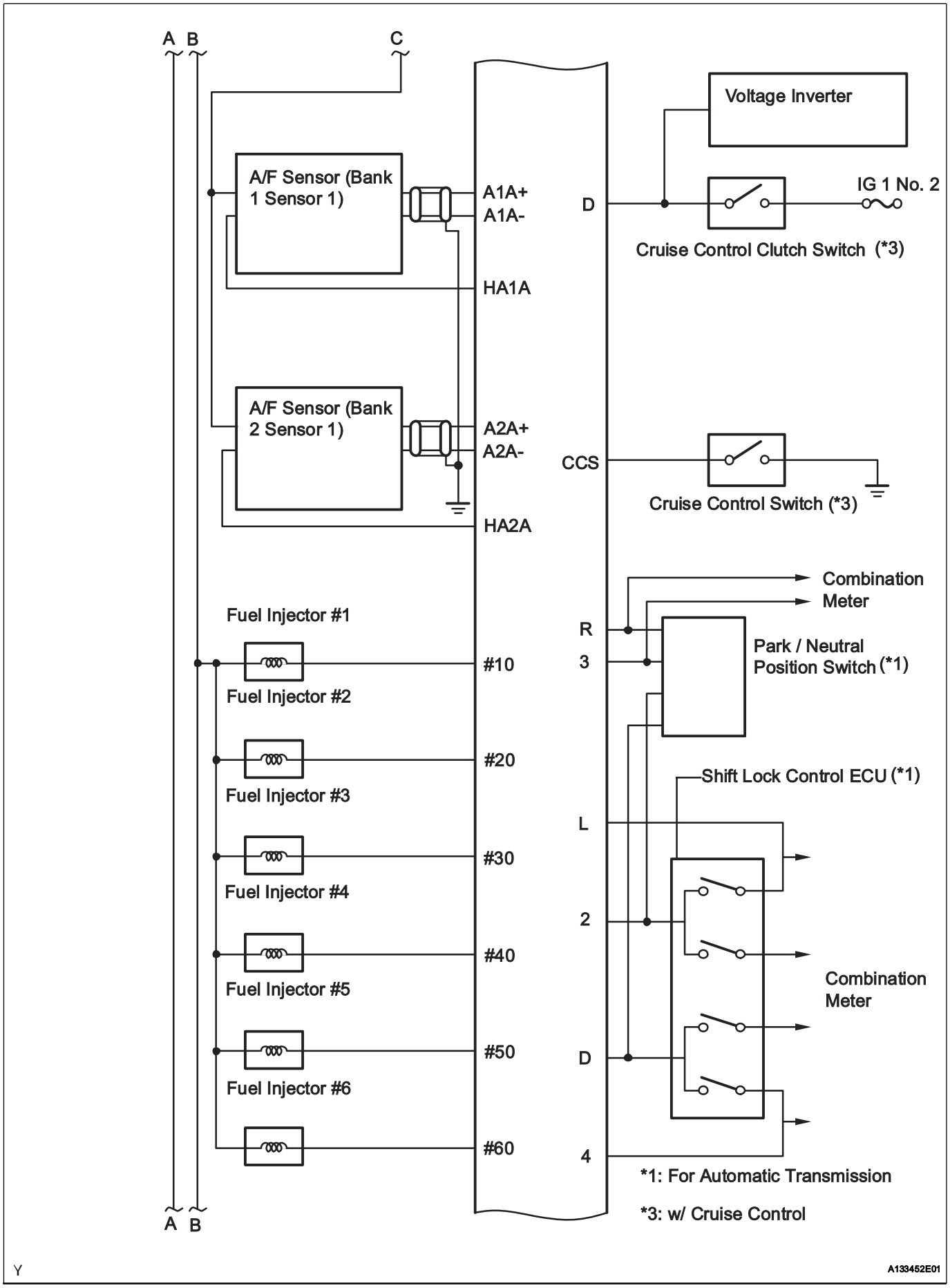
A B
C
Voltage Inverter
A/F Sensor (Bank 1 Sensor 1)
A1A+
A1A-
D
IG 1 No. 2
Cruise Control Clutch Switch (*3)
HA1A
A/F Sensor (Bank 2 Sensor 1)
A2A+
A2A-
CCS
Cruise Control Switch (*3)
HA2A
Combination Meter
Fuel Injector #1
R
3
Park / Neutral Position Switch (*1)
#10
Fuel Injector #2
#20
Fuel Injector #3
Shift Lock Control ECU (*1)
L
#30
Fuel Injector #4
2
#40
Fuel Injector #5
Combination Meter
#50
D
Fuel Injector #6
#60
4
*1: For Automatic Transmission
*3: w/ Cruise Control
A B
Y
A133452E01

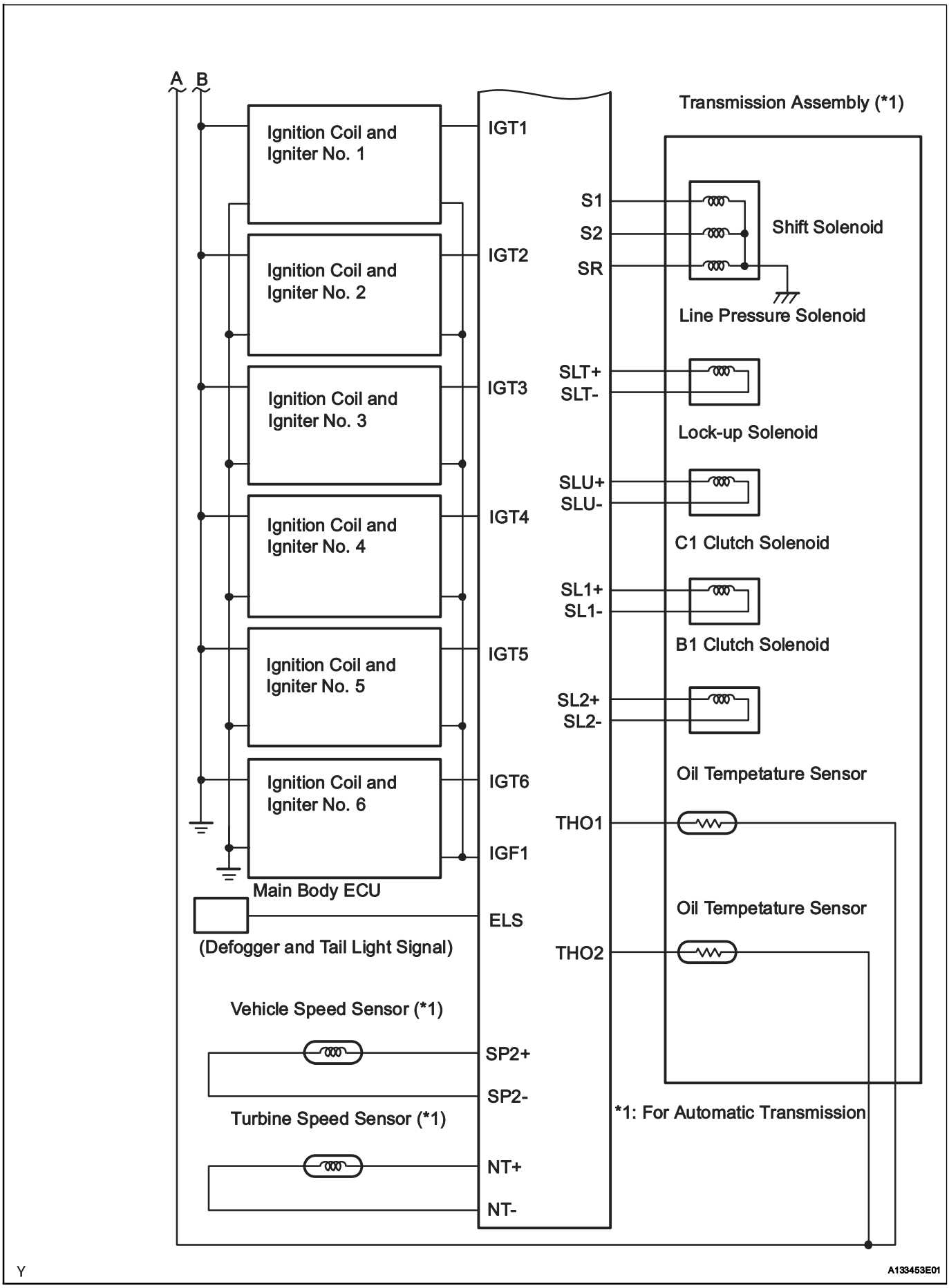
A
B
Ignition Coil and Igniter No. 1
Ignition Coil and Igniter No. 2
Ignition Coil and Igniter No. 3
Ignition Coil and Igniter No. 4
Ignition Coil and Igniter No. 5
Ignition Coil and Igniter No. 6
IGT1
IGT2
IGT3
IGT4
IGT5
IGT6
IGF1
Main Body ECU
ELS
(Defogger and Tail Light Signal)
Vehicle Speed Sensor (*1)
SP2+
SP2-
Turbine Speed Sensor (*1)
NT+
NT-
Transmission Assembly (*1)
S1
S2
SR
Shift Solenoid
Line Pressure Solenoid
SLT+
SLT-
Lock-up Solenoid
SLU+
SLU-
C1 Clutch Solenoid
SL1+
SL1-
B1 Clutch Solenoid
SL2+
SL2-
Oil Tempetature Sensor
THO1
Oil Tempetature Sensor
THO2
*1: For Automatic Transmission
Y
A133453E01

HOW TO PROCEED WITH TROUBLESHOOTING

HINT:
*: Use the intelligent tester.

1	VEHICLE BROUGHT TO WORKSHOP

NEXT

2	CUSTOMER PROBLEM ANALYSIS

NEXT

3	CONNECT INTELLIGENT TESTER TO DLC3*

HINT:
If the display indicates a communication fault in the tester, inspect the DLC3.

NEXT

4	CHECK DTC AND FREEZE FRAME DATA*

HINT:
Record or print DTCs and freeze frame data, if necessary.

NEXT

5	CLEAR DTC AND FREEZE FRAME DATA*

NEXT

6	CONDUCT VISUAL INSPECTION

NEXT

7	SET CHECK MODE DIAGNOSIS*

NEXT

8	CONFIRM PROBLEM SYMPTOMS

HINT:
If the engine does not start, perform steps 10 and 12 first.

Result	Proceed To
Malfunction does not occur	A
Malfunction occurs	B

B → GO TO STEP 10

A

9	SIMULATE SYMPTOMS

NEXT

ES

10	CHECK DTC*

Result	Proceed To
Malfunction code	A
No code	B

B → GO TO STEP 12

A

11	REFER TO DTC CHART

NEXT

12	CONDUCT BASIC INSPECTION

Result	Proceed To
Malfunctioning parts not confirmed	A
Malfunctioning parts confirmed	B

B → GO TO STEP 17

A

13	REFER TO PROBLEM SYMPTOMS TABLE

Result	Proceed To
Malfunctioning circuit confirmed	A
Malfunctioning parts confirmed	B

B → GO TO STEP 17

A

14	CHECK ECM POWER SOURCE CIRCUIT

NEXT

15	CONDUCT CIRCUIT INSPECTION

Result	Proceed To
Malfunction not confirmed	A
Malfunction confirmed	B

B → GO TO STEP 18

A

16	CHECK FOR INTERMITTENT PROBLEMS

NEXT

17	CONDUCT PARTS INSPECTION

NEXT

18	IDENTIFY PROBLEM

NEXT

19	ADJUST AND/OR REPAIR

NEXT

20	CONDUCT CONFIRMATION TEST

NEXT

END

CHECK FOR INTERMITTENT PROBLEMS

HINT:
Intelligent tester only:
Inspect the vehicle's ECM using check mode. Intermittent problems are easier to detect with an intelligent tester when the ECM is in check mode. In check mode, the ECM uses 1trip detection logic, which is more sensitive to malfunctions than normal mode (default), which uses 2trip detection logic.

1. Clear DTCs (See page ES-38).
2. Switch the ECM from normal mode to check mode using an intelligent tester (See page ES-42).
3. Perform a simulation test.
4. Check and wiggle the harness(es), connector(s) and terminal(s).

BASIC INSPECTION

When a malfunction is not confirmed by the DTC check, troubleshooting should be carried out in all circuits considered to be possible causes of the problem. In many cases, by carrying out the basic engine check shown in the following flowchart, the location of the problem can be found quickly and efficiently. Therefore, using this check is essential when engine troubleshooting.

1 CHECK BATTERY VOLTAGE

NOTICE:
Carry out this check with the engine stopped and ignition switch OFF.

Result	Proceed To
11 V or more	OK
Below 11 V	NG

NG → **CHARGE OR REPLACE BATTERY**

OK

2 CHECK WHETHER ENGINE WILL CRANK

NG → **PROCEED TO PROBLEM SYMPTOMS TABLE**

OK

3 CHECK WHETHER ENGINE STARTS

NG → **GO TO STEP 6**

OK

4 CHECK AIR FILTER

(a) Visually check that the air filter is not excessively contaminated with dirt or oil.

NG → **REPLACE AIR FILTER**

OK

5 CHECK IDLING SPEED

NG → **TROUBLESHOOT IDLING SPEED AND PROCEED TO NEXT STEP**

OK

6	CHECK FUEL PRESSURE

NG → TROUBLESHOOT FUEL PRESSURE AND PROCEED TO NEXT STEP

OK

7	CHECK FOR SPARK

NG → TROUBLESHOOT SPARK AND PROCEED TO NEXT STEP

OK

PROCEED TO PROBLEM SYMPTOMS TABLE

REGISTRATION

NOTICE:
The Vehicle Identification Number (VIN) must be input into the replacement ECM.
HINT:
The VIN is in the form of a 17-digit alphanumeric vehicle identification number. An intelligent tester is required to resister the VIN.

1. DESCRIPTION

This registration section consists of three parts, Input Instructions, Read VIN and Write VIN.

(a) Input Instructions: Explains the general VIN input instructions using an intelligent tester.

(b) Read VIN: Explains the VIN reading process in a flowchart. This process allows the VIN stored in the ECM to be read, in order to confirm that the two VINs, provided with the vehicle and stored in the vehicle's ECM, are the same.

(c) Write VIN: Explains the VIN writing process in a flowchart. This process allows the VIN to be input into the ECM. If the ECM is changed, or the VIN and VIN do not match, the VIN can be registered, or overwritten in the ECM by following this procedure.

2. INPUT INSTRUCTIONS

(a) Intelligent tester
  (1) The arrow buttons (UP, DOWN, RIGHT and LEFT) and numerical buttons (0 to 9) are used, in order to input the VIN.

(b) Cursor Operation
  (1) To move the cursor around the tester screen, press the RIGHT and LEFT buttons.

(c) Alphabetical Character Input
  (1) Press the UP and DOWN buttons to select the desired alphabetical character.
  (2) After selection, the cursor should move.

(d) Numeric Character Input
  (1) Press the numerical button corresponding to the number that you want to input.
  (2) After input, the cursor should move.
  HINT:
  Numerical characters can be selected by using the UP and DOWN buttons.

(e) Correction
  (1) When correcting the input character(s), put the cursor onto the character using the RIGHT or LEFT buttons.
  (2) Select or input the correct character using the UP/DOWN buttons, or the numerical buttons.

(f) Finishing Input Operation
  (1) Make sure that the input VIN matches the vehicle VIN after input.
  (2) Press the ENTER button on the tester.

3. READ VIN

(a) Confirm the vehicle VIN.
(b) Connect an intelligent tester to the DLC3.
(c) Turn the ignition switch ON.
(d) Turn the tester ON.
(e) Select the following menu items: DIAGNOSIS / ENHANCED OBD II / VIN.

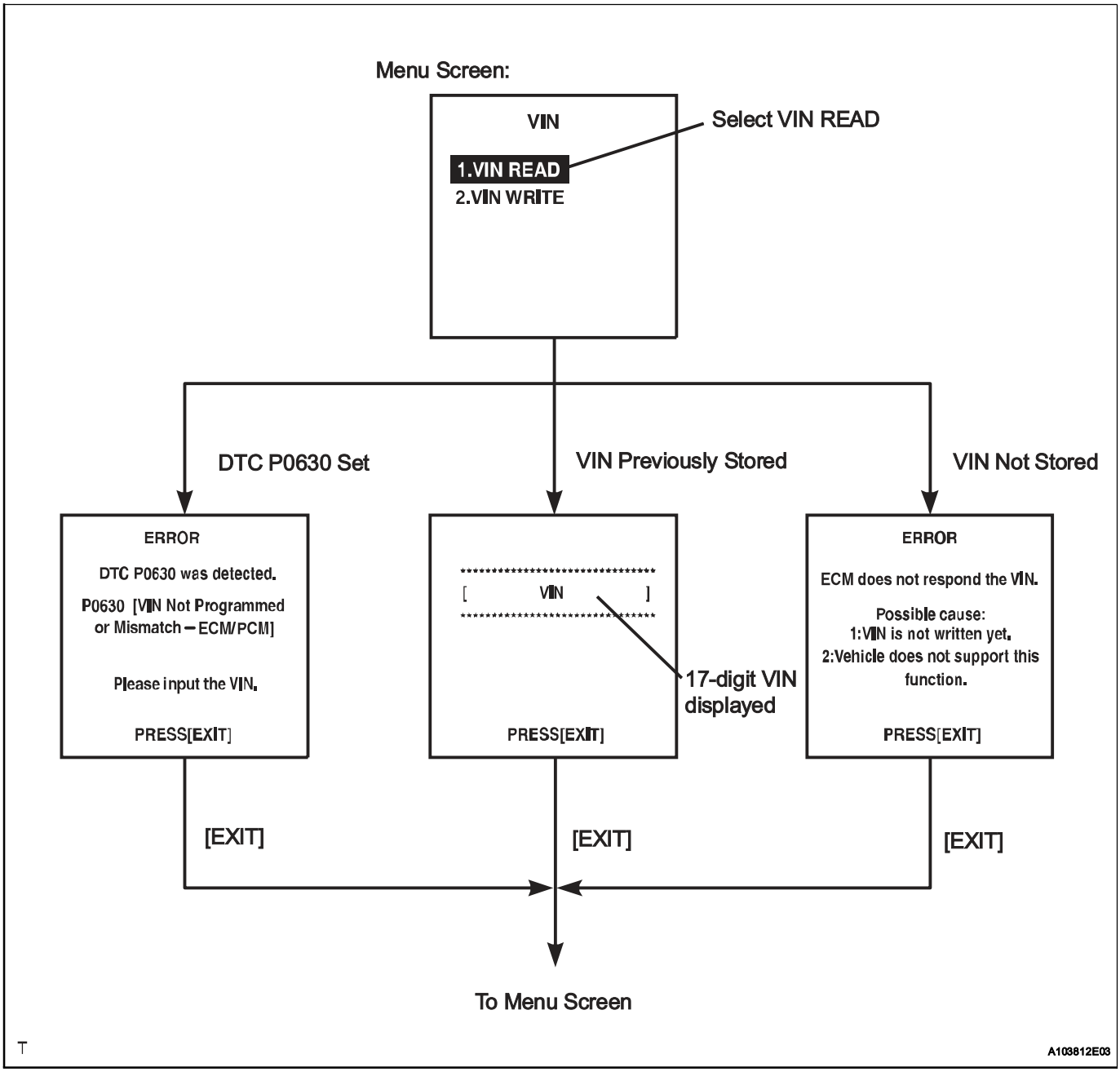

4. WRITE VIN

(a) Confirm the vehicle VIN.
(b) Connect an intelligent tester to the DLC3.
(c) Turn the ignition switch ON.
(d) Turn the tester ON.

(e) Select the following menu items: DIAGNOSIS / ENHANCED OBD II / VIN.

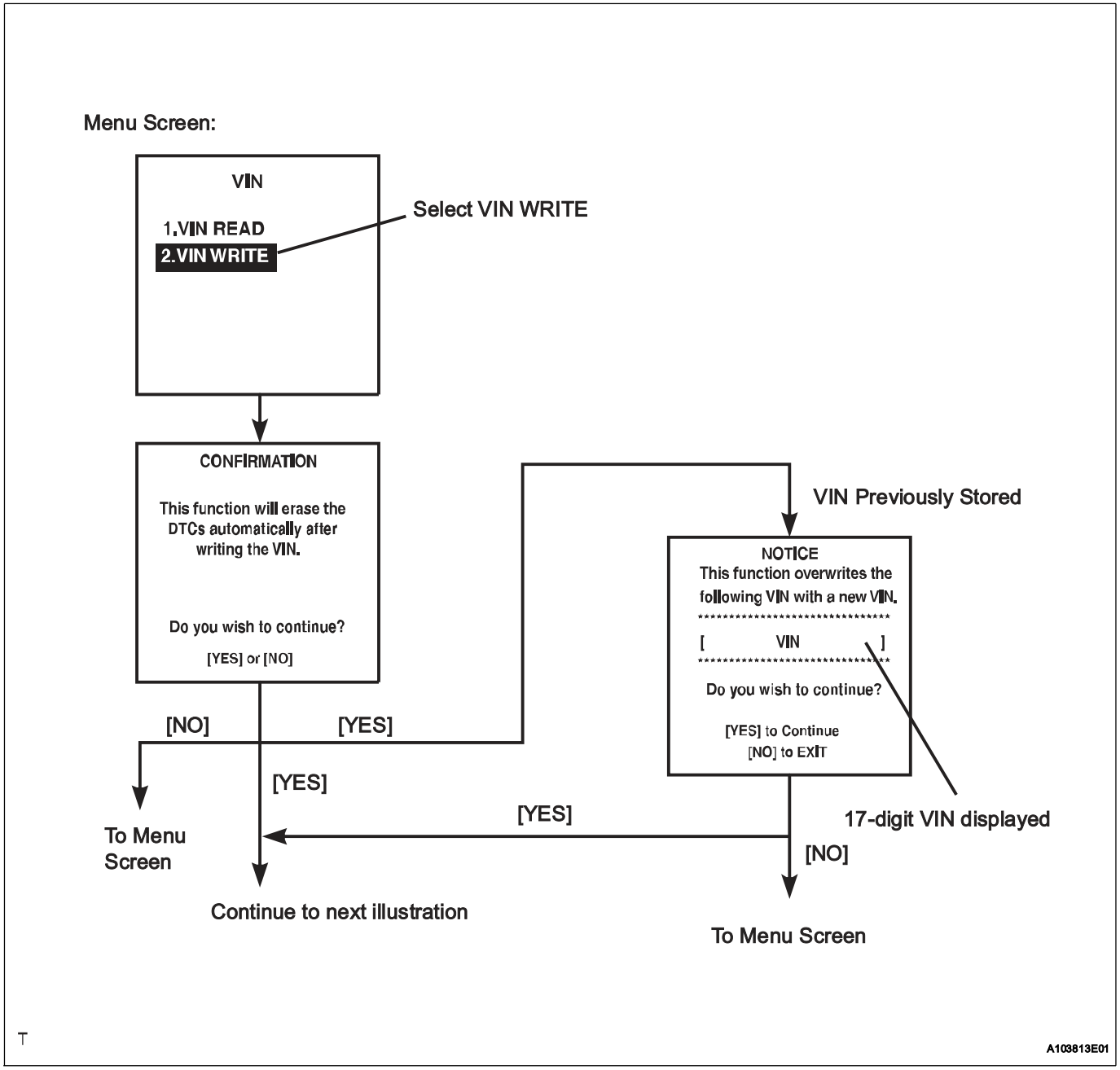

T

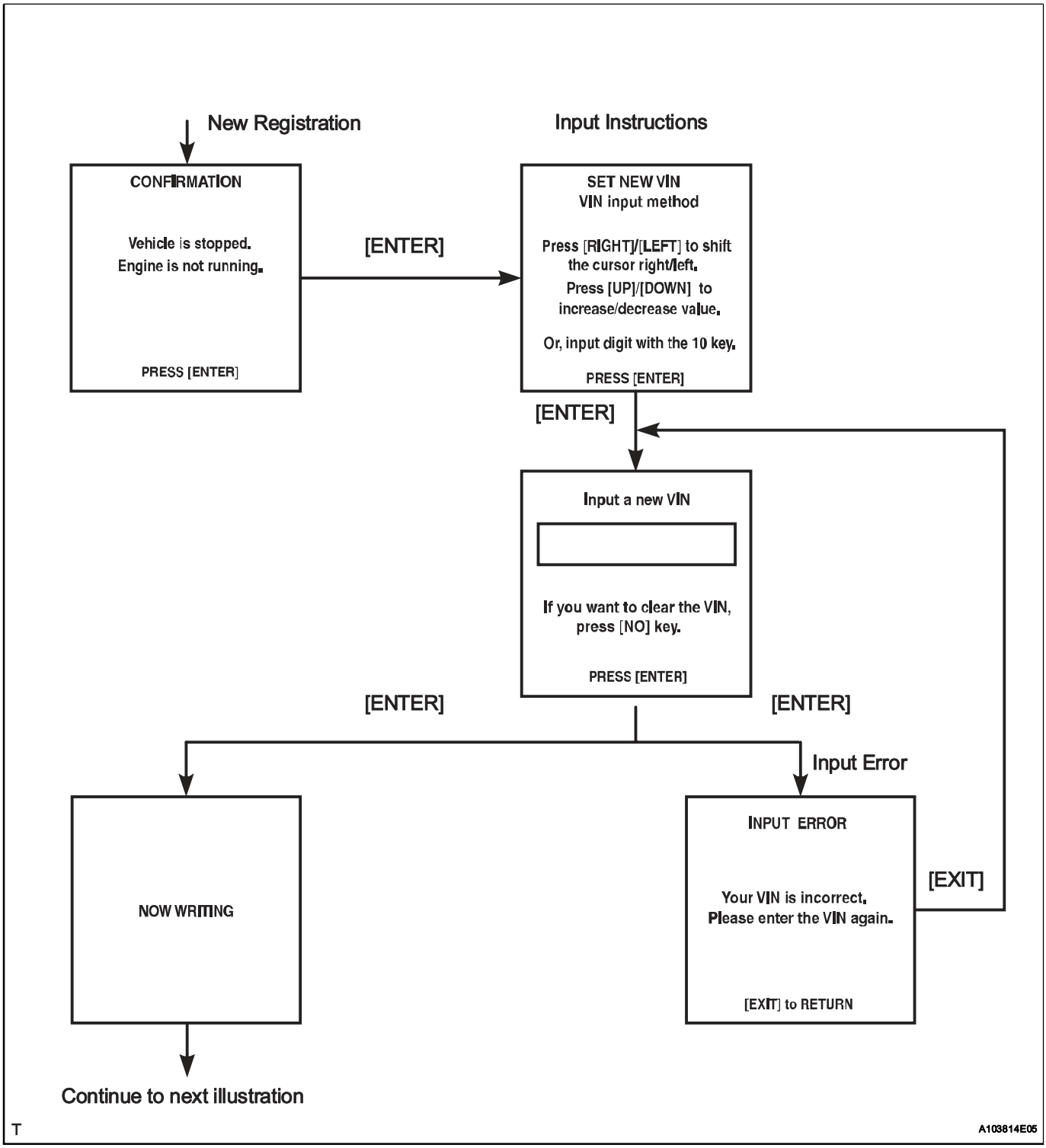
New Registration
Input Instructions
CONFIRMATION
Vehicle is stopped.
Engine is not running.
PRESS [ENTER]
[ENTER]
SET NEW VIN
VIN input method
Press [RIGHT]/[LEFT] to shift the cursor right/left.
Press [UP]/[DOWN] to increase/decrease value.
Or, input digit with the 10 key.
PRESS [ENTER]
[ENTER]
Input a new VIN
If you want to clear the VIN, press [NO] key.
PRESS [ENTER]
[ENTER]
[ENTER]
Input Error
NOW WRITING
INPUT ERROR
Your VIN is incorrect.
Please enter the VIN again.
[EXIT] to RETURN
[EXIT]
Continue to next illustration
T
A103814E05

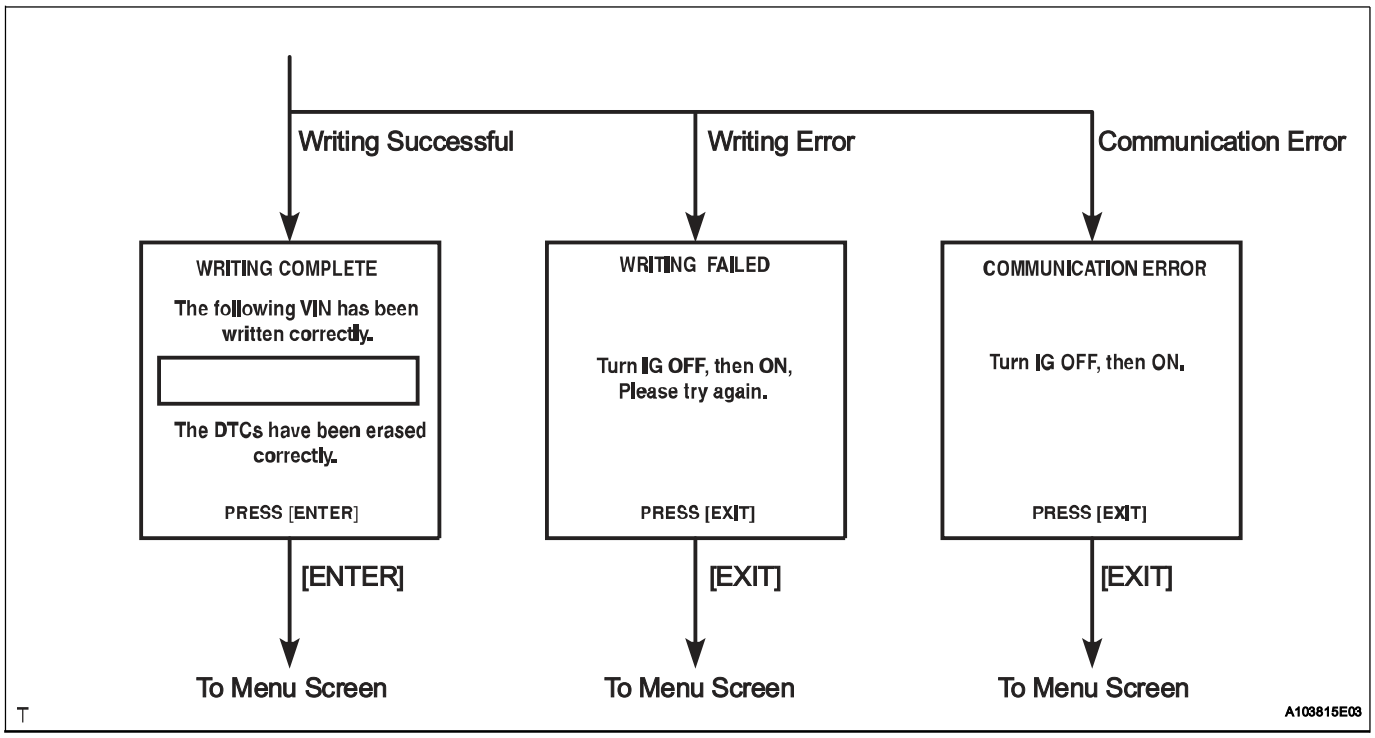
Writing Successful
Writing Error
Communication Error
WRITING COMPLETE
The following VIN has been written correctly.
The DTCs have been erased correctly.
PRESS [ENTER]
WRITING FAILED
Turn IG OFF, then ON, Please try again.
PRESS [EXIT]
COMMUNICATION ERROR
Turn IG OFF, then ON.
PRESS [EXIT]
[ENTER]
[EXIT]
[EXIT]
To Menu Screen
To Menu Screen
To Menu Screen
A103815E03

ES

CHECKING MONITOR STATUS

The purpose of the monitor result (mode 06) is to allow access to the results for on-board diagnostic monitoring tests of specific components/systems that are not continuously monitored. Examples are catalyst, evaporative emission (EVAP) and thermostat.

The monitor result allows the OBD II scan tool to display the monitor status, test value, minimum test limit and maximum test limit. These data are displayed after the vehicle has been driven to run the monitor.

When the test value is not between the minimum test limit and maximum test limit, the ECM (PCM) interprets this as a malfunction. When the component is not malfunctioning, if the difference of the test value and test limit is very small, the component will malfunction in the near future.

Perform the following instruction to view the monitor status. Although this instruction reference the Lexus/Toyota diagnostic tester, it can be checked using a generic OBD II scan tool. Refer to your scan tool operator's manual for specific procedures.

1. PERFORM MONITOR DRIVE PATTERN

(a) Connect an intelligent tester to the DLC3.

(b) Turn the ignition switch ON and the tester ON.

(c) Clear DTCs (See page ES-38).

(d) Run the vehicle in accordance with the applicable drive pattern described in READINESS MONITOR DRIVE PATTERN (See page ES-23). Do not turn the ignition switch OFF.

NOTICE:

The test results will be lost if the ignition switch is turned OFF.

2. ACCESS MONITOR RESULT

(a) Select from the intelligent tester menus: DIAGNOSIS, ENHANCED OBD II, MONITOR INFO and MONITOR RESULT. The monitor status appears after the component name.

- INCMP: The component has not been monitored yet.
- PASS: The component is functioning normally.
- FAIL: The component is malfunctioning.

(b) Confirm that the component is either PASS or FAIL.

(c) Select the component and press ENTER. The accuracy test value appears if the monitor status is either PASS or FAIL.

3. CHECK COMPONENT STATUS

(a) Compare the test value with the minimum test limit (MIN LIMIT) and maximum test limit (MAX LIMIT).

(b) If the test value is between the minimum test limit and maximum test limit, the component is functioning normally. If not, the component is malfunctioning. The test value is usually significantly higher or lower than the test limit. If the test value is on the borderline of the test limit, the component will malfunction in the near future.
HINT:
The monitor result might on rare occasions be PASS even if the malfunction indicator lamp (MIL) is illuminated. This indicates the system malfunctioned on a previous driving cycle. This might be caused by an intermittent problem.

4. **MONITOR RESULT INFORMATION**
If you use a generic scan tool, multiply the value by the scaling value listed below.

A/F Sensor Bank 1 Sensor 1

Monitor ID	Test ID	Scaling	Unit	Description
$01	$8E	Multiply by 0.001	V	A/F sensor deterioration level
$01	$91	Multiply by 0.004	mA	A/F sensor current

A/F Sensor Bank 2 Sensor 1

Monitor ID	Test ID	Scaling	Unit	Description
$05	$8E	Multiply by 0.001	V	A/F sensor deterioration level
$05	$91	Multiply by 0.004	mA	A/F sensor current

HO2 Sensor Bank 1 Sensor 2

Monitor ID	Test ID	Scaling	Unit	Description
$02	$07	Multiply by 0.001	V	Minimum sensor voltage
$02	$08	Multiply by 0.001	V	Maximum sensor voltage
$02	$8F	Multiply by 0.0003	g	Maximum oxygen storage capacity

HO2 Sensor Bank 2 Sensor 2

Monitor ID	Test ID	Scaling	Unit	Description
$06	$07	Multiply by 0.001	V	Minimum sensor voltage
$06	$08	Multiply by 0.001	V	Maximum sensor voltage
$06	$8F	Multiply by 0.0003	g	Maximum oxygen storage capacity

Catalyst - Bank 1

Monitor ID	Test ID	Scaling	Unit	Description
$21	$A9	Multiply by 0.0003	No dimension	Oxygen storage capacity of catalyst - Bank 1

Catalyst - Bank 2

Monitor ID	Test ID	Scaling	Unit	Description
$22	$A9	Multiply by 0.0003	No dimension	Oxygen storage capacity of catalyst - Bank 2

EVAP

Monitor ID	Test ID	Scaling	Unit	Description
$3D	$C9	Multiply by 0.001	kPa	Test value for small leak (P0456)
$3D	$CA	Multiply by 0.001	kPa	Test value for gross leak (P0455)
$3D	$CB	Multiply by 0.001	kPa	Test value for leak detection pump OFF stuck (P2401)
$3D	$CD	Multiply by 0.001	kPa	Test value for leak detection pump ON stuck (P2402)
$3D	$CE	Multiply by 0.001	kPa	Test value for vent valve OFF stuck (P2420)

Monitor ID	Test ID	Scaling	Unit	Description
$3D	$CF	Multiply by 0.001	kPa	Test value for vent valve ON stuck (P2419)
$3D	$D0	Multiply by 0.001	kPa	Test value for reference orifice low flow (P043E)
$3D	$D1	Multiply by 0.001	kPa	Test value for reference orifice high flow (P043F)
$3D	$D4	Multiply by 0.001	kPa	Test value for purge VSV close stuck (P0441)
$3D	$D5	Multiply by 0.001	kPa	Test value for purge VSV open stuck (P0441)
$3D	$D7	Multiply by 0.001	kPa	Test value for purge flow insufficient (P0441)

Rear Oxygen Sensor Heater

Monitor ID	Test ID	Scaling	Unit	Description
$42	$91	Multiply by 0.001	Ohm	Oxygen sensor heater resistance bank 1 sensor 2
$46	$91	Multiply by 0.001	Ohm	Oxygen sensor heater resistance bank 2 sensor 2

ES

Misfire

Monitor ID	Test ID	Scaling	Unit	Description
$A1	$0B	Multiply by 1	Time	Exponential Weighted Moving Average (EWMA) misfire for all cylinders: Misfire counts for last 10 driving cycles - Total
$A1	$0C	Multiply by 1	Time	Misfire rate for all cylinders: Misfire counts for last/current driving cycles - Total
$A2	$0B	Multiply by 1	Time	EWMA misfire for cylinder 1: Misfire counts for last 10 driving cycles - Total
$A2	$0C	Multiply by 1	Time	Misfire rate for cylinder 1: Misfire counts for last/current driving cycles - Total
$A3	$0B	Multiply by 1	Time	EWMA misfire for cylinder 2: Misfire counts for last 10 driving cycles - Total
$A3	$0C	Multiply by 1	Time	Misfire rate for cylinder 2: Misfire counts for last/current driving cycles - Total
$A4	$0B	Multiply by 1	Time	EWMA misfire for cylinder 3: Misfire counts for last 10 driving cycles - Total
$A4	$0C	Multiply by 1	Time	Misfire rate for cylinder 3: Misfire counts for last/current driving cycles - Total
$A5	$0B	Multiply by 1	Time	EWMA misfire for cylinder 4: Misfire counts for last 10 driving cycles - Total
$A5	$0C	Multiply by 1	Time	Misfire rate for cylinder 4: Misfire counts for last/current driving cycles - Total
$A6	$0B	Multiply by 1	Time	EWMA misfire for cylinder 5: Misfire counts for last 10 driving cycles - Total
$A6	$0C	Multiply by 1	Time	Misfire rate for cylinder 5: Misfire counts for last/current driving cycles - Total
$A7	$0B	Multiply by 1	Time	EWMA misfire for cylinder 6: Misfire counts for last 10 driving cycles - Total
$A7	$0C	Multiply by 1	Time	Misfire rate for cylinder 6: Misfire counts for last/current driving cycles - Total

READINESS MONITOR DRIVE PATTERN

PURPOSE OF READINESS TESTS

- The On-Board Diagnostic (OBD II) system is designed to monitor the performance of emission related components, and indicate any detected abnormalities with DTCs (Diagnostic Trouble Codes). Since various components need to be monitored during different driving conditions, the OBD II system is designed to run separate monitoring programs called Readiness Monitors.
- The intelligent tester's software must be version 9.0 or newer to view the Readiness Monitor Status. To view the status, select the following menu items: DIAGNOSIS / ENHANCED OBD II / MONITOR INFO / MONITOR STATUS.
- When the Readiness Monitor Status reads COMPL (complete), the necessary conditions have been met for running the performance tests for that Readiness Monitor.
- A generic OBD II scan tool can also be used to view the Readiness Monitor Status.

HINT:
Many state Inspection and Maintenance (I/M) programs require a vehicle's Readiness Monitor Status to show COMPL before beginning emission tests.
The Readiness Monitor will be reset to INCMPL (incomplete) if:

- The ECM has lost battery power or blown a fuse.
- DTCs have been cleared.
- The conditions for running the Readiness Monitor have not been met.

If the Readiness Monitor Status shows INCMPL, follow the appropriate Readiness Monitor Drive Pattern to change the status to COMPL.

CAUTION:
Strictly observe posted speed limits, traffic laws, and road conditions when performing these drive patterns.

NOTICE:
These drive patterns represent the fastest method of satisfying all conditions necessary to achieve complete status for each specific Readiness Monitor.
In the event of a drive pattern being interrupted (possibly due to factors such as traffic conditions), the drive pattern can be resumed. In most cases, the Readiness Monitor will still achieve complete status upon completion of the drive pattern.
To ensure completion of the Readiness Monitors, avoid sudden changes in vehicle load and speed (driving up and down hills and/or sudden acceleration).

Contents

Steps	Section Titles
1	Catalyst Monitor (Active Air-Fuel Ratio Control Type)

Steps	Section Titles
2	EVAP System Monitor (Key-Off Type)
3	Air-Fuel Ratio (A/F) and Heated Oxygen (HO2) Sensor Monitors (Active Air-Fuel Ratio Control Type)
4	Air-Fuel Ratio (A/F) and Heated Oxygen (HO2) Sensor Heater Monitors (Front A/F and Rear HO2 Sensor Type)

1. CATALYST MONITOR (ACTIVE AIR-FUEL RATIO CONTROL TYPE)

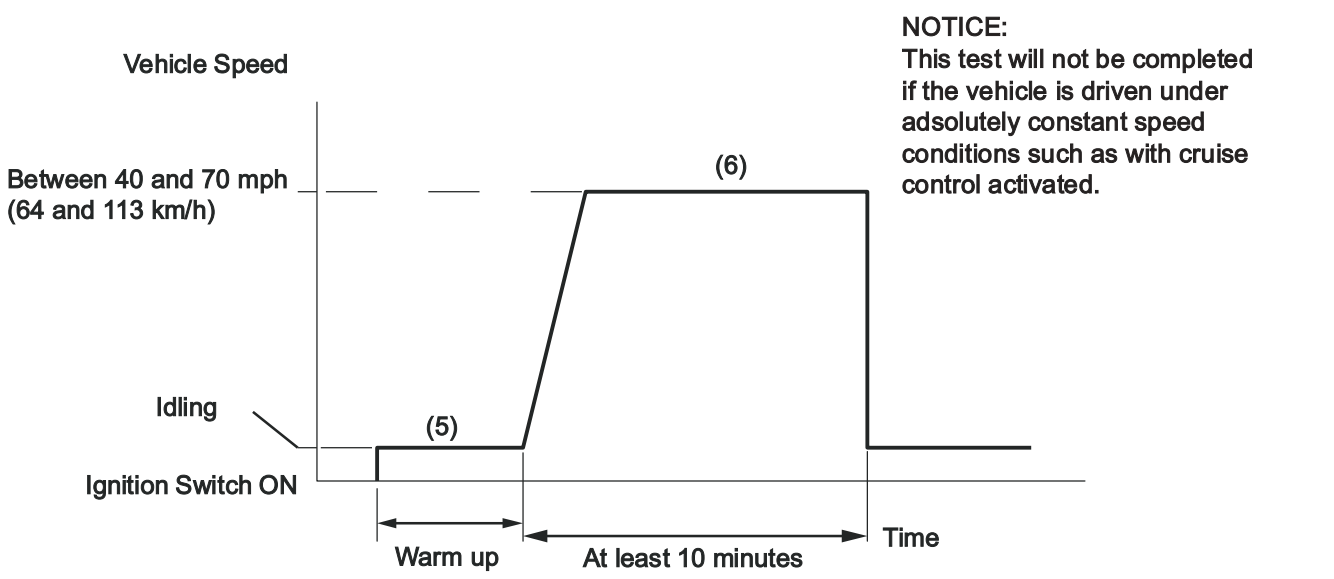

(a) Preconditions
The monitor will not run unless:
- The MIL is OFF

(b) Drive Pattern
(1) Connect an intelligent tester or OBD II scan tool to the DLC3.
(2) Turn the ignition switch ON.
(3) Turn the tester or scan tool ON.
(4) Clear DTCs (where set) (See page ES-38).
(5) Start the engine and warm it up.
(6) Drive the vehicle at between 40 mph and 70 mph (64 km/h and 113 km/h) for at least 10 minutes.

(c) Monitor Status
(1) Check the Readiness Monitor Status displayed on the tester or scan tool.
(2) If the status does not switch to COMPL (complete), extend the driving time.

2. EVAP SYSTEM MONITOR (KEY-OFF TYPE)

(a) Preconditions
The monitor will not run unless:
- The fuel tank is less than 90 % full.
- The altitude is less than 8,000 ft (2,450 m).

- The vehicle is at stationary.
- The engine coolant temperature is between 4.4°C and 35°C (40°F and 95°F).
- The intake air temperature is between 4.4°C and 35°C (40°F and 95°F).
- Vehicle was driven in the city area (or on free-way) for 10 minutes or more.

(b) Monitor Conditions

(1) Turn the ignition switch OFF and wait for 6 hours.

HINT:

Do not start the engine until checking Readiness Monitor Status. If the engine is started, the step described above must be repeated.

(c) Monitor Status

(1) Connect an intelligent tester to the DLC3.

(2) Turn the ignition switch ON.

(3) Turn the tester or scan tool ON.

(4) Check the Readiness Monitor Status displayed on the tester or scan tool.

If the status does not switch to COMPL (complete), restart the engine, make sure that the preconditions have been met, and then perform the Monitor Conditions again.

3. AIR-FUEL RATIO (A/F) AND HEATED OXYGEN (HO2) SENSOR MONITORS (ACTIVE AIR-FUEL RATIO CONTROL TYPE)

(a) Preconditions

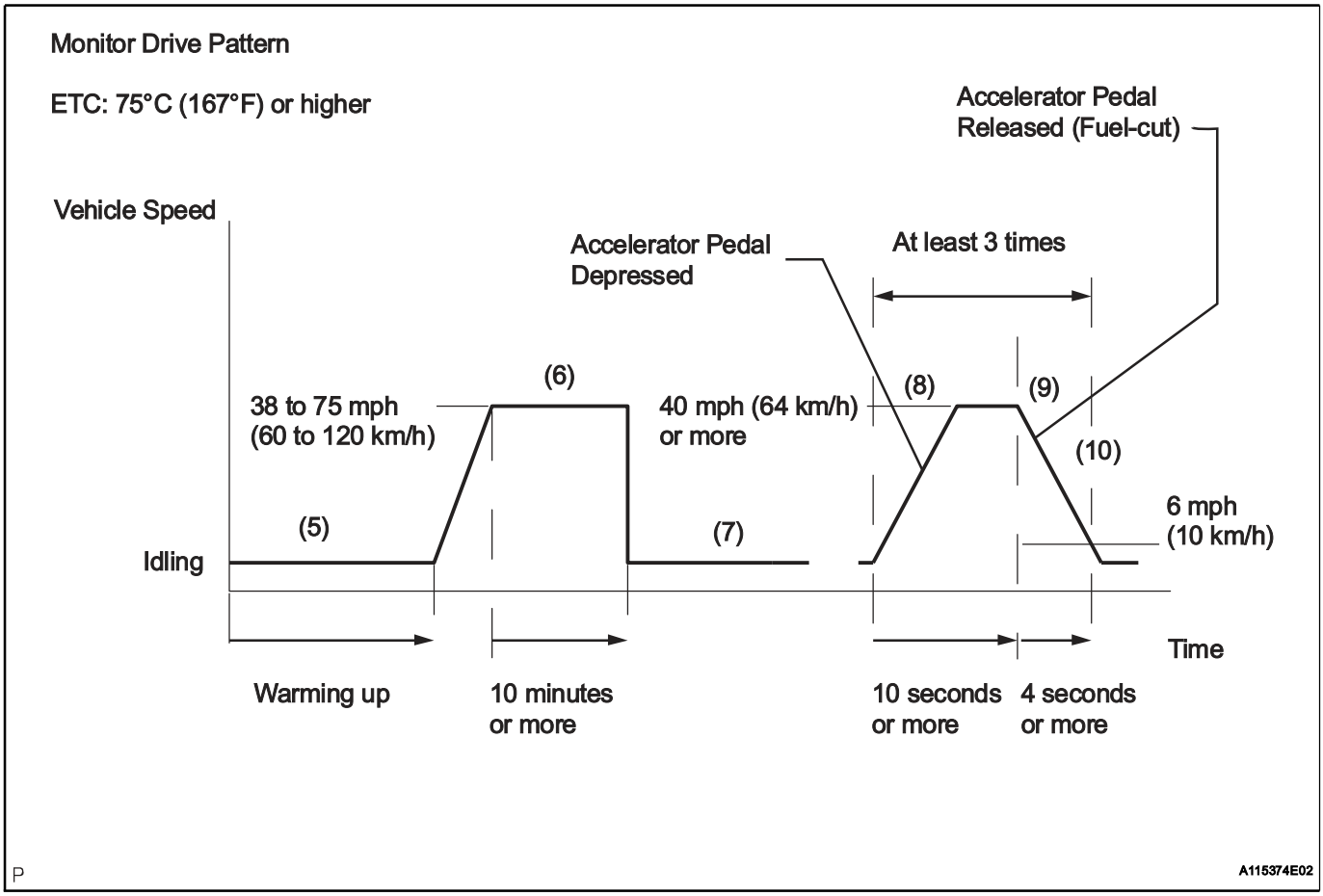

The monitor will not run unless:

- 2 minutes or more have elapsed since the engine was started.
- The Engine Coolant Temperature (ECT) is 75°C (167°F) or more.
- Cumulative driving time at a vehicle speed of 30 mph (48 km/h) or more exceeds 6 minutes.
- Air-fuel ratio feedback control is performed.
- Fuel-cut control is performed for 8 seconds or more (for the Rear HO2 Sensor Monitor)

(b) Drive Pattern for front A/F sensor and HO2 sensor

(1) Connect an intelligent tester to the DLC3.
(2) Turn the ignition switch ON.
(3) Turn the tester ON.
(4) Clear DTCs (See page ES-38).
(5) Start the engine, and warm it up until the ECT reaches 75°C (167°F) or higher.
(6) Drive the vehicle at 38 mph (60 km/h) or more for at least 10 minutes.
(7) Change the transmission to 2nd gear.
(8) Accelerate the vehicle to 40 mph (64 km/h) or more by depressing the accelerator pedal for at least 10 seconds.

(9) Soon after performing step (8) above, release the accelerator pedal for at least 4 seconds without depressing the brake pedal, in order to execute fuel-cut control.
(10) Allow the vehicle to decelerate until the vehicle speed declines to less than 6 mph (10 km/h).
(11) Repeat steps from (8) through (10) above at least 3 times in one driving cycle.

(c) Monitor Status
(1) Check the Readiness Monitor Status displayed on the tester.
(2) If the status does not switch to COMPL (complete), make sure that the preconditions have been met, and then perform steps from (5) through (11) in Drive Pattern above.

4. AIR-FUEL RATIO (A/F) AND HEATED OXYGEN (HO2) SENSOR HEATER MONITORS (FRONT A/F AND REAR HO2 SENSOR TYPE)

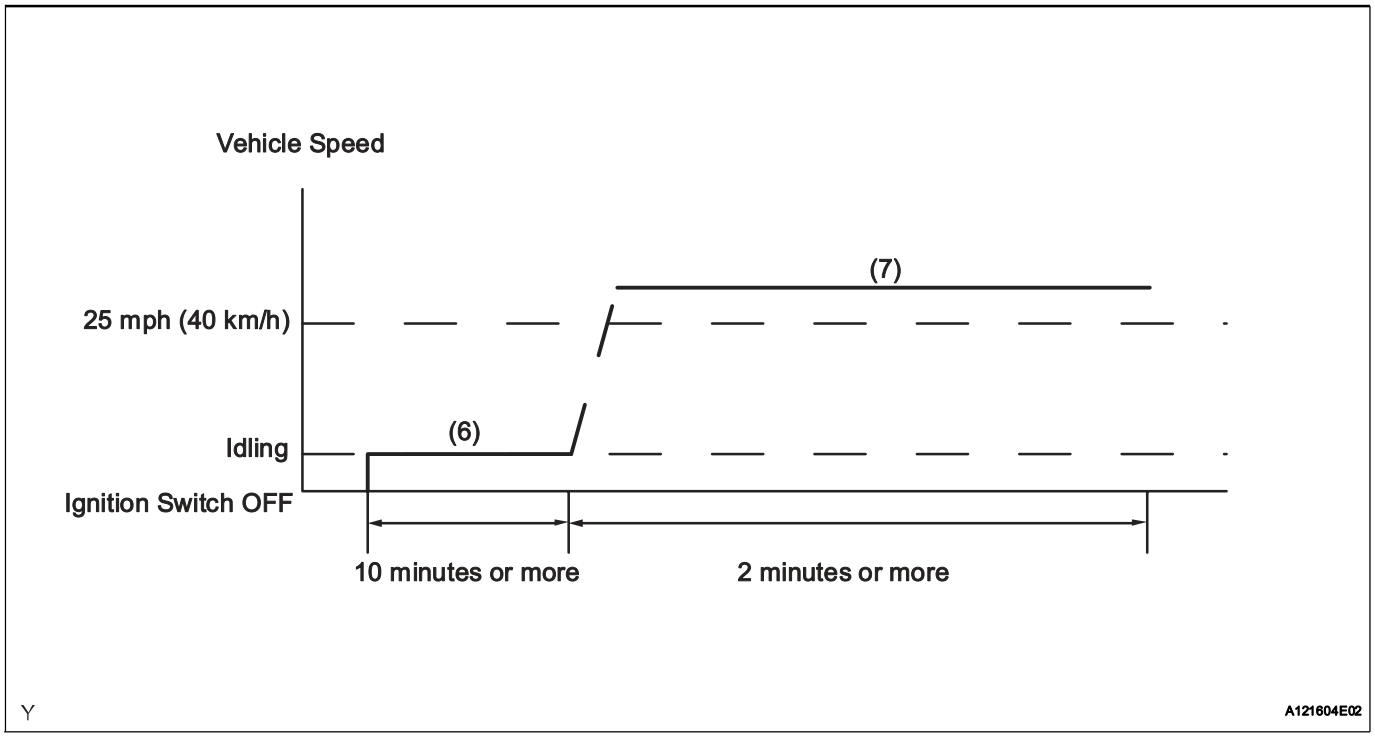

(a) Preconditions
The monitor will not run unless:
- The MIL is OFF

(b) Drive Pattern
(1) Connect an intelligent tester to the DLC3.
(2) Turn the ignition switch ON.
(3) Turn the tester or scan tool ON.
(4) Clear DTCs (See page ES-38).
(5) Start the engine.
(6) Allow the engine to idle for 10 minutes or more.
(7) Drive the vehicle at 25 mph (40 km/h) or more for at least 2 minutes.

(c) Monitor Status

(1) Check the Readiness Monitor Status displayed on the tester or scan tool.
If the status does not switch to COMPL (complete), make sure that the preconditions have been met, and repeat steps through (5) to (7) described in the Drive Pattern above.

PROBLEM SYMPTOMS TABLE

HINT:
When a malfunction is not confirmed by a DTC (Diagnostic Trouble Code) check and the cause of problem cannot be identified through a basic inspection, troubleshoot according to the priority order indicated in the table below.

Symptom	Suspected area	See page
Engine does not crank (Does not start)	1. Immobilizer System	-
	2. Starter	ST-9
	3. STARTER relay	ST-17
No initial combustion (Does not start)	1. ECM power source circuit	ES-384
	2. Fuel pump control circuit	ES-394
	3. VC output circuit	ES-389
	4. ECM	ES-29
Engine cranks normally but difficult to start	1. Fuel pump control circuit	ES-394
	2. Compression	EM-3
Difficult to start with cold engine	1. Starter signal circuit	ES-267
	2. Fuel pump control circuit	ES-394
	3. Spark plug	IG-5
	4. Ignition system	ES-199
	5. Injector	FU-14
Difficult to start with warm engine	1. Starter signal circuit	ES-267
	2. Fuel pump control circuit	ES-394
	3. Spark plug	IG-5
	4. Ignition system	ES-199
	5. Injector	FU-14
High engine idling speed (Poor idling)	1. A/C signal circuit	AC-8
	2. ECM power source circuit	ES-384
	3. Electronic throttle control system	ES-428
	4. Air induction system	-
	5. PCV hose	-
Low engine idling speed (Poor idling)	1. A/C signal circuit	AC-8
	2. Fuel pump control circuit	ES-394
	3. Electronic throttle control system	ES-428
	4. Air induction system	-
	5. PCV hose	-
Rough idling (Poor idling)	1. Compression	EM-3
	2. Fuel pump control circuit	ES-394
	3. Electronic throttle control system	ES-428
	4. Air induction system	-
	5. PCV hose	-
Hunting (Poor idling)	1. ECM power source circuit	ES-384
	2. Fuel pump control circuit	ES-394
	3. Spark plug	IG-5
	4. Ignition system	ES-199
	5. Injector	FU-14
	6. Electronic throttle control system	ES-428
	7. Air induction system	-
	8. PCV hose	-

Symptom	Suspected area	See page
Hesitation/ Poor acceleration (Poor driveability)	1. Fuel pump control circuit	ES-394
	2. A/T faulty* (A750E)	AT-22
	3. A/T faulty* (A750F)	AT-23
	4. Spark plug	IG-5
	5. Ignition system	ES-199
	6. Injector	FU-14
Surging (Poor driveability)	1. Fuel pump control circuit	ES-394
	2. Spark plug	IG-5
	3. Ignition system	ES-199
	4. Injector	FU-14
Engine stalls soon after starting	1. Fuel pump control circuit	ES-394
	2. Spark plug	IG-5
	3. Ignition system	ES-199
	4. Injector	FU-14
Engine stalls during A/C operation	1. A/C signal circuit	AC-8
	2. ECM	ES-29
Unable/difficult to refuel	Refueling valve (canister)	-

TERMINALS OF ECM

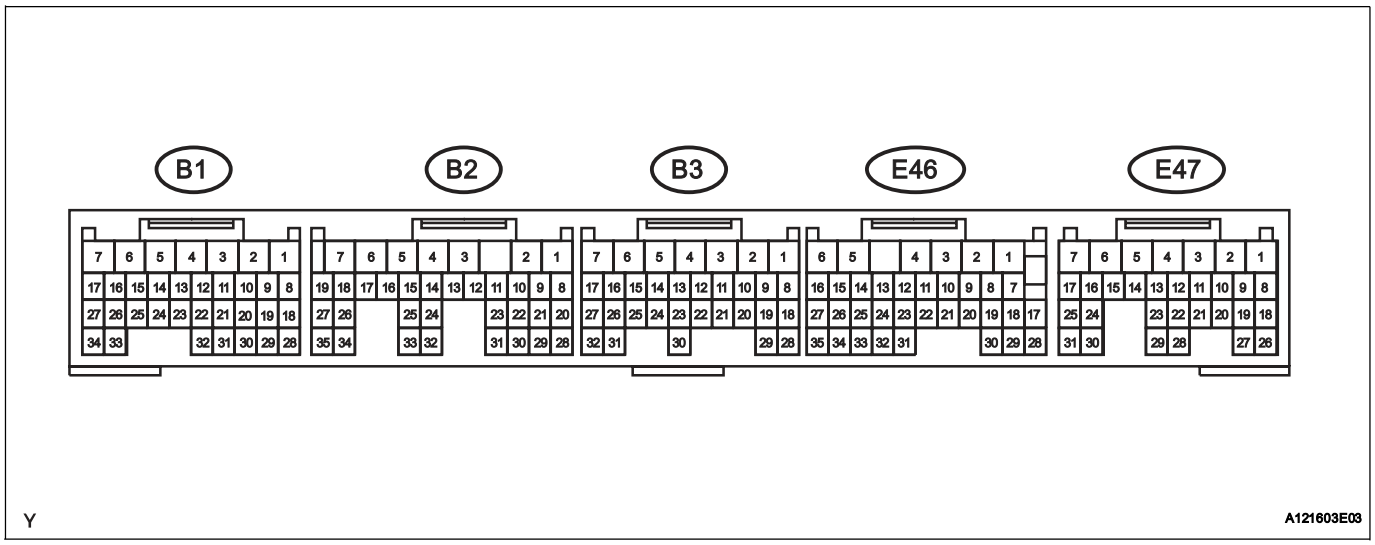

HINT:
The standard normal voltage between each pair of ECM terminals is shown in the table below. The appropriate conditions for checking each pair of terminals are also indicated.
The result of checks should be compared with the standard normal voltage for that pair of terminals, displayed in the STD Voltages column.
The illustration above can be used as a reference to identify the ECM terminal locations.

Symbols (Terminal No.)	Wiring Colors	Terminal Descriptions	Conditions	STD Voltages
BATT (E47-3) - E1 (B3-1)	L - BR	Battery (for measuring the battery voltage and for the ECM memory)	Always	11 to 14 V
+BM (E47-7) - E1 (B3-1)	GR - BR	Power source of throttle motor	Always	11 to 14 V
IGSW (E47-9) - E1 (B3-1)	B-O - BR	Ignition switch	Ignition switch ON	11 to 14 V
+B (E47-1) - E1 (B3-1)	B - BR	Power source of ECM	Ignition switch ON	11 to 14 V
+B2 (E47-2) - E1 (B3-1)	B - BR	Power source of ECM	Ignition switch ON	11 to 14 V
OC1+ (B3-17) - OC1- (B3-16)	G-Y - L-B	Camshaft timing oil control valve (OCV)	Ignition switch ON	Pulse generation (see waveform 1)
OC2+ (B3-15) - OC2- (B3-14)	L-W - L-R	Camshaft timing oil control valve (OCV)	Ignition switch ON	Pulse generation (see waveform 1)
MREL (E47-8) - E1 (B3-1)	W-G - BR	EFI relay	Ignition switch ON	11 to 14 V
VC (B1-23) - E2 (B1-28)	L-R - W-G	Power source of sensor (specific voltage)	Ignition switch ON	4.5 to 5.5 V
VG (B1-30) - E2G (B1-29)	R - R-W	Mass air flow meter	Idling, Shift lever position P or N, A/C switch OFF	0.5 to 3.0 V
THA (B1-22) - E2 (B1-28)	R-B - W-G	Intake air temperature sensor	Idling, Intake air temperature 20°C (68°F)	0.5 to 3.4 V
THW (B1-21) - E2 (B1-28)	B - W-G	Engine coolant temperature sensor	Idling, Engine coolant temperature 80°C (176°F)	0.2 to 1.0 V
VTA1 (B1-20) - E2 (B1-28)	G-B - W-G	Throttle position sensor (for engine control)	Ignition switch ON, Throttle valve fully closed	0.5 to 1.2 V
			Ignition switch ON, Throttle valve fully open	3.2 to 4.8 V

ES

Symbols (Terminal No.)	Wiring Colors	Terminal Descriptions	Conditions	STD Voltages
VTA2 (B1-19) - E2 (B1-28)	G-W - W-G	Throttle position sensor (for sensor malfunction detection)	Ignition switch ON, Throttle valve fully closed	2.1 to 3.1 V
			Ignition switch ON, Throttle valve fully open	4.5 to 5.0 V
VPA (E47-18) - EPA (E47-20)	W-R - LG-B	Accelerator pedal position sensor (for engine control)	Ignition switch ON, Accelerator pedal fully released	0.5 to 1.1 V
			Ignition switch ON, Accelerator pedal fully depressed	2.6 to 4.5 V
VPA2 (E47-19) - EPA2 (E47-21)	R-B - V-W	Accelerator pedal position sensor (for sensor malfunction detection)	Ignition switch ON, Accelerator pedal fully released	1.2 to 2.0 V
			Ignition switch ON, Accelerator pedal fully depressed	3.4 to 5.0 V
VCPA (E47-26) - EPA (E47-20)	B-Y - LG-B	Power source of accelerator pedal position sensor (for VPA)	Ignition switch ON	4.5 to 5.5 V
VCP2 (E47-27) - EPA2 (E47-21)	W-L - V-W	Power source of accelerator pedal position sensor (for VPA2)	Ignition switch ON	4.5 to 5.5 V
HA1A (B2-2) - E04 (B2-7) HA2A (B2-1) - E05 (B2-6)	R-L - W-B B-W - W-B	A/F sensor heater	Idling	Below 3.0 V
			Ignition switch ON	11 to 14 V
A1A+ (B2-22) - E1 (B3-1)	P - BR	A/F sensor	Ignition switch ON	3.3 V*1
A2A+ (B2-23) - E1 (B3-1)	Y - BR	A/F sensor	Ignition switch ON	3.3 V*1
A1A- (B2-30) - E1 (B3-1)	L - BR	A/F sensor	Ignition switch ON	2.9 V*1
A2A- (B2-31) - E1 (B3-1)	BR - BR	A/F sensor	Ignition switch ON	2.9 V*1
HT1B (B1-1) - E1 (B3-1) HT2B (B2-5) - E1 (B3-1)	G - BR L - BR	Heated oxygen sensor heater	Idling	Below 3.0 V
			Ignition switch ON	11 to 14 V
OX1B (B1-18) - E2 (B1-28) OX2B (B2-33) - E2 (B1-28)	W - W-G B - W-G	Heated oxygen sensor	Maintain engine speed at 2,500 rpm for 2 minutes after warming up	Pulse generation (see waveform 2)
#10 (B3-2) - E01 (B1-7) #20 (B3-3) - E01 (B1-7) #30 (B3-4) - E01 (B1-7) #40 (B3-5) - E01 (B1-7) #50 (B3-6) - E01 (B1-7) #60 (B3-7) - E01 (B1-7)	R-L - BR G - BR R - BR W - BR Y - BR L - BR	Injector	Ignition switch ON	11 to 14 V
			Idling	Pulse generation (see waveform 3)
KNK1 (B2-29) - EKNK (B2-28)	B - W	Knock sensor	Maintain engine speed at 4,000 rpm after warming up	Pulse generation (see waveform 4)
KNK2 (B2-21) - EKN2 (B2-20)	G - R	Knock sensor	Maintain engine speed at 4,000 rpm after warming up	Pulse generation (see waveform 4)
VV1+ (B3-19) - VV1- (B3-29)	R - G	Variable valve timing (VVT) sensor	Idling	Pulse generation (see waveform 5)
VV2+ (B3-18) - VV2- (B3-28)	Y - L	Variable valve timing (VVT) sensor	Idling	Pulse generation (see waveform 5)
NE+ (B3-21) - NE- (B3-20)	B - W	Crankshaft position sensor	Idling	Pulse generation (see waveform 5)
IGT1 (B1-8) - E1 (B3-1) IGT2 (B1-9) - E1 (B3-1) IGT3 (B1-10) - E1 (B3-1) IGT4 (B1-11) - E1 (B3-1) IGT5 (B1-12) - E1 (B3-1) IGT6 (B1-13) - E1 (B3-1)	Y-R - BR G - BR B-W - BR Y-G - BR GR - BR L - BR	Ignition coil with igniter (ignition signal)	Idling	Pulse generation (see waveform 6)

Symbols (Terminal No.)	Wiring Colors	Terminal Descriptions	Conditions	STD Voltages
IGF1 (B1-24) - E1 (B3-1)	W-R - BR	Ignition coil with igniter (ignition confirmation signal)	Ignition switch ON	4.5 to 5.5 V
			Idling	Pulse generation (see waveform 6)
PRG (B1-34) - E01 (B1-7)	G-Y - BR	Purge VSV	Ignition switch ON	11 to 14 V
			Idling	Pulse generation (see waveform 7)
SPD (E46-8) - E1 (B3-1)	V-R - BR	Speed signal from combination meter	Ignition switch ON, Rotate driving wheel slowly	Pulse generation (see waveform 8)
STA (B3-11) - E1 (B3-1)	B-Y - BR	Starter signal	Cranking	11 to 14 V
STP (E47-15) - E1 (B3-1)	G-Y - BR	Stop light switch	Brake pedal depressed	7.5 to 14 V
			Brake pedal released	Below 1.5 V
ST1- (E47-16) - E1 (B3-1)	R-L - BR	Stop light switch (opposite to STP terminal)	Ignition switch ON, Brake pedal depressed	Below 1.5 V
			Ignition switch ON, Brake pedal released	7.5 to 14 V
NSW (B2-8) - E1 (B3-1)	L-Y - BR	Park/Neutral position switch	Ignition switch ON, Shift lever position in P or N	Below 3.0 V
			Ignition switch ON, Shift lever position other than P and N	11 to 14 V
M+ (B1-5) - ME01 (B2-3)	P - W-B	Throttle motor	Idling with warm engine	Pulse generation (see waveform 9)
M- (B1-4) - ME01 (B2-3)	L - W-B	Throttle motor	Idling with warm engine	Pulse generation (see waveform 10)
FC (E47-10) - E1 (B3-1)	GR-B - BR	Fuel pump control	Ignition switch ON	11 to 14 V
FPR (B3-30) - E1 (B3-1)	Y-B - BR	Fuel pump control	Ignition switch ON	11 to 14 V
W (E46-30) - E1 (B3-1)	R-B - BR	MIL	Ignition switch ON	Below 3.0 V
			Idling	11 to 14 V
ELS (E46-13) - E1 (B3-1)	Y-B - BR	Electric load	Defogger or taillight switch OFF	0 to 1.5 V
			Defogger or taillight switch ON	7.5 to 14 V
ELS2 (E46-12) - E1 (B3-1)	Y-G - BR	Electric load	Voltage inverter OFF	0 to 1.5 V
			Voltage inverter ON	7.5 to 14 V
TC (E47-23) - E1 (B3-1)	P-L - BR	Terminal TC of DLC 3	Ignition switch ON	11 to 14 V
TACH (E46-1) - E1 (B3-1)	B-W - BR	Engine speed	Idling	Pulse generation (see waveform 11)
ACIS (B1-33) - E1 (B3-1)	W-L - BR	VSV for ACIS	Ignition switch ON	11 to 14 V
PSW (B3-10) - E1 (B3-1)	G-W - BR	P/S pressure switch	Ignition switch ON	11 to 14 V
VPMP (E47-5) - E1 (B3-1)	R-G - BR	Vent valve (built into canister pump module)	Ignition switch ON	11 to 14 V
MPMP (E47-6) - E1 (B3-1)	O - BR	Leak detection pump (built into canister pump module)	Leak detection pump OFF	0 to 3 V
			Leak detection pump ON	11 to 14 V
PPMP (E47-22) - E2 (B1-28)	R - W-G	Canister pressure sensor (built into canister pump module)	Ignition switch ON	3 to 3.6 V
F/PS (E46-32) - E1 (B3-1)	L - BR	Airbag sensor assembly	Idling with warm engine	Pulse generation (see waveform 12)
CANH (E46-33) - E1 (B3-1)	W - BR	CAN communication line	Ignition switch ON	Pulse generation (see waveform 13)
CANL (E46-34) - E1 (B3-1)	R - BR	CAN communication line	Ignition switch ON	Pulse generation (see waveform 14)

*1: The ECM terminal voltage is constant regardless of the output voltage from the sensor.

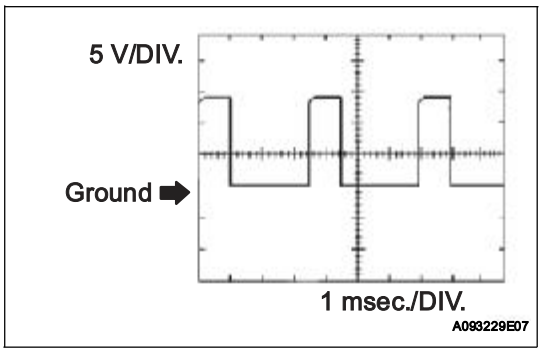

1. WAVEFORM 1
Camshaft timing oil control valve (OCV)

ECM Terminal Names	Between OC1+ and OC1- or OC2+ and OC2-
Tester Ranges	5 V/DIV, 1 msec./DIV
Conditions	Idling

HINT:
The wavelength becomes shorter as the engine rpm increases.

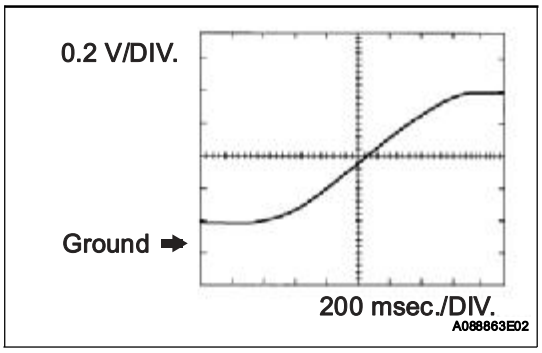

2. WAVEFORM 2
Heated oxygen sensor

ECM Terminal Names	Between OX1B and E2 or OX2B and E2
Tester Ranges	0.2 V/DIV, 200 msec./DIV
Conditions	Engine speed maintained at 2,500 rpm for 2 minutes after warming up sensor

HINT:
In the DATA LIST, item O2S B1S2 or O2S B2S2 shows the ECM input values from the heated oxygen sensor.

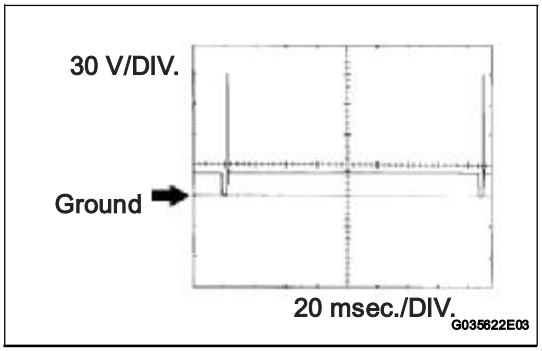

3. WAVEFORM 3
Fuel injector

ECM Terminal Names	Between #10 (to 60) and E01
Tester Ranges	30 V/DIV, 20 msec./DIV
Conditions	Idling

HINT:
The wavelength becomes shorter as the engine rpm increases.

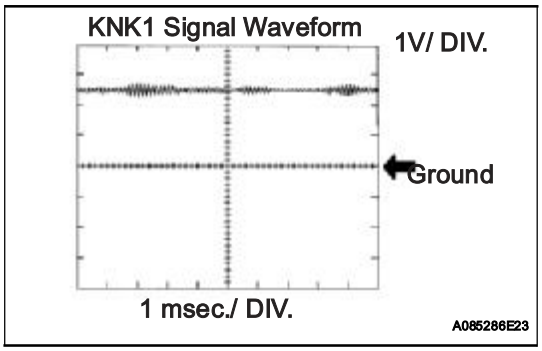

4. WAVEFORM 4
Knock sensor

ECM Terminal Names	Between KNK1 and EKNK or KNK2 and EKN2
Tester Ranges	1 V/DIV, 0.01 to 1 msec./DIV
Conditions	Engine speed maintained at 4,000 rpm after warming up engine

HINT:
- The wavelength becomes shorter as the engine rpm increases.
- The waveforms and amplitudes displayed on the tester differ slightly depending on the vehicle.

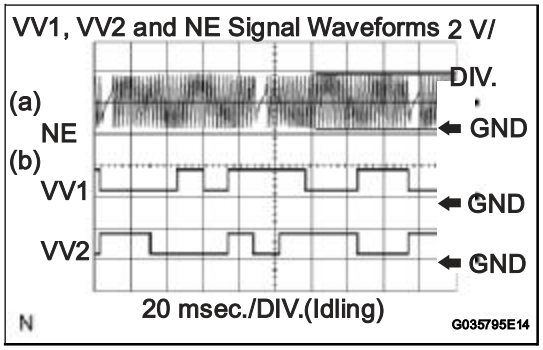

5. WAVEFORM 5

(a) VVT sensor
(b) Crankshaft position sensor

ECM Terminal Names	(a) Between NE+ and NE- (b) Between VV1+ and VV1- or VV2+ and VV2-
Tester Ranges	2 V/DIV, 20 msec./DIV
Conditions	Idling

HINT:
The wavelength becomes shorter as the engine rpm increases.

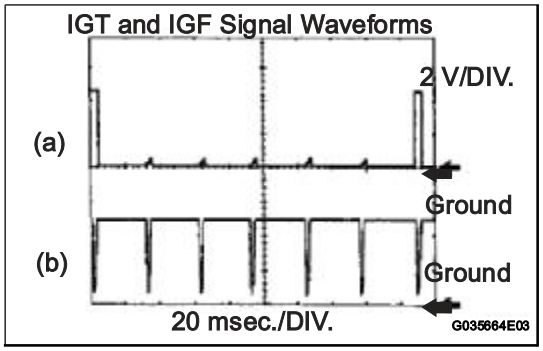

6. WAVEFORM 6

(a) Igniter IGT signal (from ECM to igniter)
(b) Igniter IGF signal (from igniter to ECM)

ECM Terminal Names	(a) Between IGT (1 to 6) and E1 (b) Between IGF1 and E1
Tester Ranges 2	2 V/DIV, 20 msec./DIV
Conditions	Idling

HINT:
The wavelength becomes shorter as the engine rpm increases.

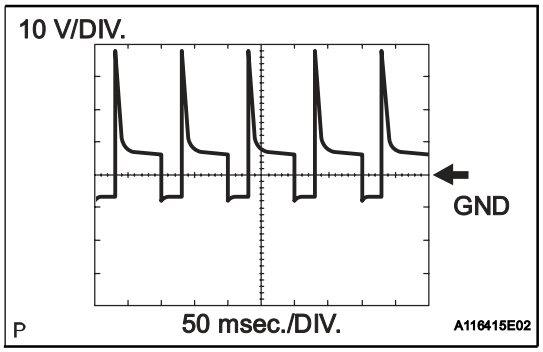

7. WAVEFORM 7
Purge VSV

ECM Terminal Names	Between PRG and E01
Tester Ranges	10 V/DIV, 50 msec./DIV
Conditions	Idling

HINT:
If the waveform is not similar to the illustration, check the waveform again after idling for 10 minutes or more.

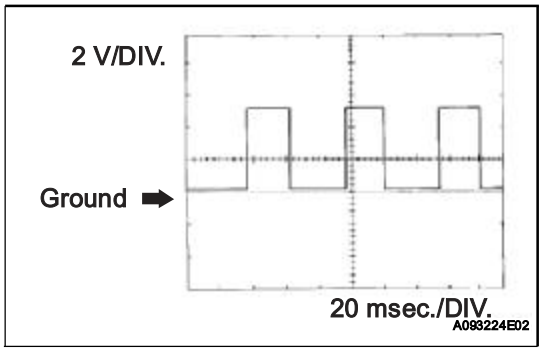

8. WAVEFORM 8
Vehicle speed signal

ECM Terminal Names	Between SPD and E1
Tester Ranges	2 V/DIV, 20 msec./DIV
Conditions	Driving at 12 mph (20 km/h)

HINT:
The wavelength becomes shorter as the vehicle speed increases.

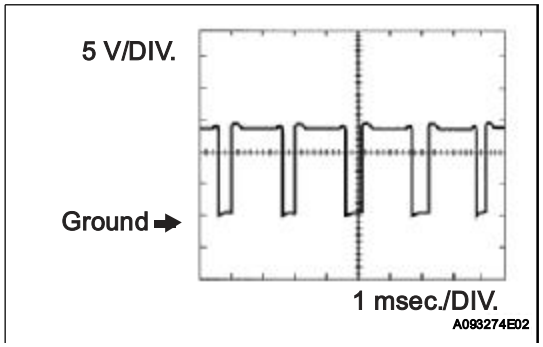

9. WAVEFORM 9
Throttle actuator positive terminal

ECM Terminal Names	Between M+ and ME01
Tester Ranges	5 V/DIV, 1 msec./DIV
Conditions	Idling with warm engine

HINT:
The duty ratio varies depending on the throttle actuator operation.

ES

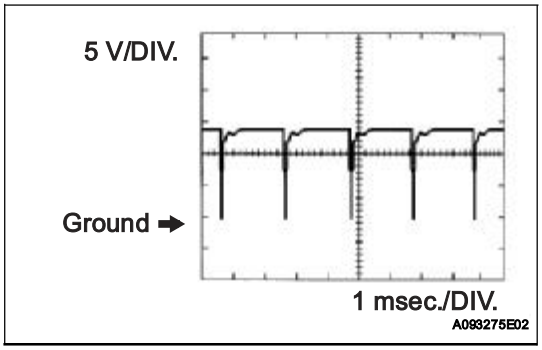

10. WAVEFORM 10
Throttle actuator negative terminal

ECM Terminal Names	Between M- and ME01
Tester Ranges	5 V/DIV, 1 msec./DIV
Conditions	Idling with warm engine

HINT:
The duty ratio varies depending on the throttle actuator operation.

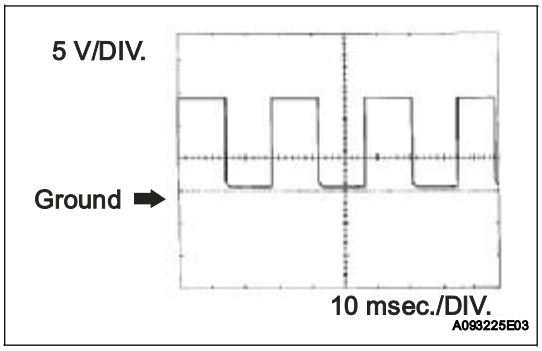

11. WAVEFORM 11
Engine speed signal

ECM Terminal Names	Between TACH and E1
Tester Ranges	5 V/DIV, 10 msec./DIV
Conditions	Idling

HINT:
The wavelength becomes shorter as the engine rpm increases.

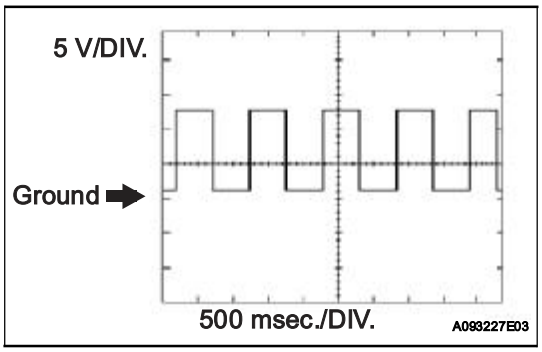

12. WAVEFORM 12
Airbag sensor assembly

ECM Terminal Names	Between F/PS and E1
Tester Ranges	5 V/DIV, 500 msec./DIV
Conditions	Idling with warm engine

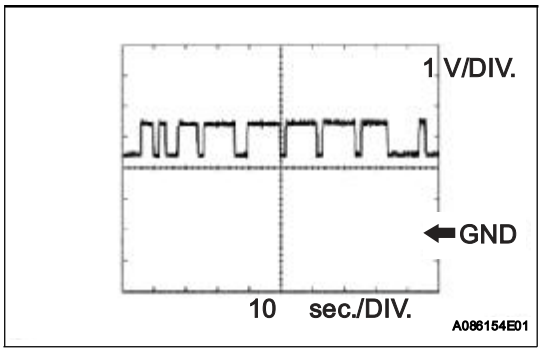

13. WAVEFORM 13
CAN communication signal (Reference)

ECM Terminal Names	Between CANH and E1
Tester Ranges	1 V/DIV, 10μsec./DIV
Conditions	Ignition switch ON

HINT:
The wavelength varies depending on the CAN communication signal.

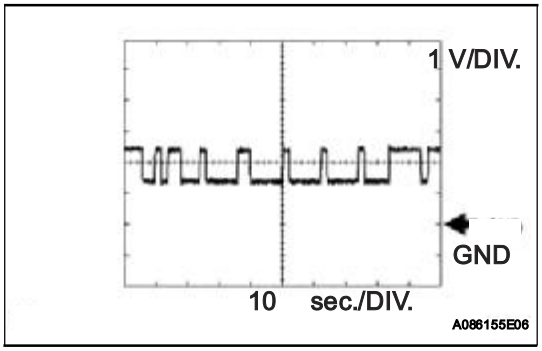

14. WAVEFORM 14
CAN communication signal (Reference)

ECM Terminal Names	Between CANL and E1
Tester Ranges	1 V/DIV, 10μsec./DIV
Conditions	Ignition switch ON

HINT:
The wavelength varies depending on the CAN communication signal.

DIAGNOSIS SYSTEM

1. DESCRIPTION

When troubleshooting OBD II (On-Board Diagnostics) vehicles, an intelligent tester (complying with SAE J1987) must be connected to the DLC3 (Data Link Connector 3) of the vehicle. Various data in the vehicle's ECM (Engine Control Module) can be then read.

OBD II regulations require that the vehicle's on-board computer illuminates the MIL (Malfunction Indicator Lamp) on the instrument panel when the computer detects a malfunction in:

(a) The emission control systems and components

(b) The power train control components (which affect vehicle emissions)

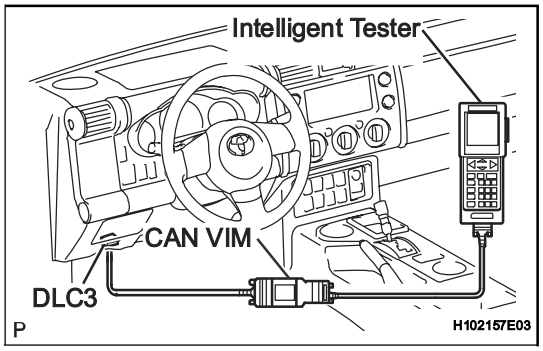

(c) The computer itself

In addition, the applicable DTCs (Diagnostic Trouble Codes) prescribed by SAE J2012 are recorded on 3 consecutive trips, the MIL turns off automatically but the DTCs remain recorded in the ECM memory.

To check DTCs, connect an intelligent tester to the DLC3. The tester displays DTCs, freeze frame data, and a variety of engine data. The DTCs and freeze frame data can be erased with the tester (See page ES-38).

In order to enhance OBD function on vehicles and develop the Off-Board diagnosis system, CAN communication is introduced in this system (CAN: Controller Area Network). It minimizes a gap between technician skills and vehicle technology. CAN is a network, which uses a pair of data transmission lines, spanning multiple computers and sensors. It allows a high speed communication between the systems and to simplify the wire harness connection.

Since this system is equipped with the CAN communication, connecting the CAN VIM (VIM: Vehicle Interface Module) with an intelligent tester is necessary to display any information from the ECM. (Also the communication between an intelligent tester and the ECM uses CAN communication signals.) When confirming the DTCs and any data of the ECM, connect the CAN VIM between the DLC3 and an intelligent tester.

2. NORMAL MODE AND CHECK MODE

The diagnosis system operates in normal mode during normal vehicle use. In normal mode, 2 trip detection logic is used to ensure accurate detection of malfunctions. Check mode is also available as an option for technicians. In check mode, 1 trip detection logic is used for simulating malfunction symptoms and increasing the system's ability to detect malfunctions, including intermittent problems (intelligent tester only) (See page ES-13).

3. **2 TRIP DETECTION LOGIC**
When a malfunction is first detected, the malfunction is temporarily stored in the ECM memory (1st trip). If the same malfunction is detected during the next subsequent drive cycle, the MIL is illuminated (2nd trip).

4. **FREEZE FRAME DATA**
Freeze frame data record the engine condition (fuel system, calculated engine load, engine coolant temperature, fuel trim, engine speed, vehicle speed, etc.) when malfunctions are detected. When troubleshooting, freeze frame data can help determine if the vehicle was moving or stationary, if the engine was warmed up or not, if the air-fuel ratio was lean or rich, and other data, from the time the malfunction occurred.

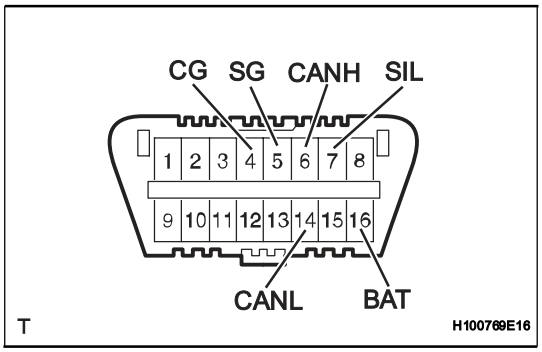

5. **DLC3 (Data Link Connector 3)**
The vehicle's ECM uses the ISO 15765-4 for communication protocol. The terminal arrangement of the DLC3 complies with SAE J1962 and matches the ISO 15765-4 format.

Symbols	Terminal No.	Names	Reference terminals	Results	Conditions
SIL	7	Bus "+" line	5 - Signal ground	Pulse generation	During transmission
CG	4	Chassis ground	Body ground	1 Ω or less	Always
SG	5	Signal ground	Body ground	1 Ω or less	
BAT	16	Battery positive	Body ground	11 to 14 V	
CANH	6	CAN "High" line	CANL	54 to 69 Ω	Ignition switch OFF *
			Battery positive	6 kΩ or higher	
			CG	200 Ω or higher	
CANL	14	CAN "Low" line	Battery positive	6 kΩ or higher	
			CG	200 Ω or higher	

NOTICE:
***: Before measuring the resistance, leave the vehicle as is for at least 1 minute and do not operate the ignition switch, any other switches or the doors.**
HINT:
The DLC3 is the interface prepared for reading various data from the vehicle's ECM. After connecting the cable of an intelligent tester, turn the ignition switch ON and turn the tester ON. If a communication failure message is displayed on the tester screen (on the tester: UNABLE TO CONNECT TO VEHICLE), a problem exists in either the vehicle or tester. In order to identify the location of the problem, connect the tester to another vehicle.
If communication is normal: Inspect the DLC3 on the original vehicle.

If communication is impossible: The problem is probably with the tester itself. Consult the Service Department listed in the instruction manual.

6. **BATTERY VOLTAGE**
   Standard Voltage:
   11 to 14 V
   If the voltage is below 11 V, recharge the battery before proceeding.
7. **MIL (Malfunction Indicator Lamp)**
   (a) The MIL is illuminated when the ignition switch is first turned ON (the engine is not running).
   (b) The MIL should turn off when the engine is started. If the MIL remains illuminated, the diagnosis system has detected a malfunction or abnormality in the system.
   HINT:
   If the MIL is not illuminated when the ignition switch is first turned ON, check the MIL circuit (See page ES-404).
8. **ALL READINESS**
   (a) For the vehicle, using the intelligent tester allows readiness codes corresponding to all DTCs to be read. When diagnosis (normal or malfunctioning) has been complete, readiness codes are set. Select the following menu items: ENHANCED OBD II / MONITOR INFO on the intelligent tester.

ES

DTC CHECK / CLEAR

NOTICE:

When the diagnosis system is changed from normal mode to check mode or vice versa, all DTCs and freeze frame data recorded in normal mode are erased. Before changing modes, always check and make a note of DTCs and freeze frame data.

HINT:

- DTCs which are stored in the ECM can be displayed on an intelligent tester. An intelligent tester can display current and pending DTCs.
- Some DTCs are not set if the ECM does not detect the same malfunction again during a second consecutive driving cycle. However, such malfunctions, detected on only one occasion, are stored as pending DTCs.

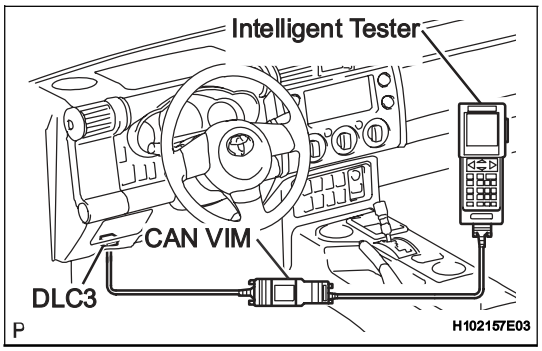

1. **CHECK DTC (Using an intelligent tester)**
   (a) Connect an intelligent tester to the DLC3.
   (b) Turn the ignition switch ON.
   (c) Turn the tester ON.
   (d) Select the following menu items: DIAGNOSIS / ENHANCED OBD II / DTC INFO / CURRENT CODES.
   (e) Check the DTC(s) and freeze frame data, and then write them down.
   (f) Check the details of the DTC(s) (See page ES-57).
2. **CLEAR DTC (Using an intelligent tester)**
   (a) Connect an intelligent tester to the DLC3.
   (b) Turn the ignition switch ON.
   (c) Turn the tester ON.
   (d) Select the following menu items: DIAGNOSIS / ENHANCED OBD II / DTC INFO / CLEAR CODES.
   (e) Press the YES button.
3. **CLEAR DTC (Without using an intelligent tester)**
   (a) Perform either one of the following operations.
      (1) Disconnect the negative battery cable for more than 1 minute.
      (2) Remove the EFI and ETCS fuses from the Relay Block (R/B) located inside the engine compartment for more than 1 minute.

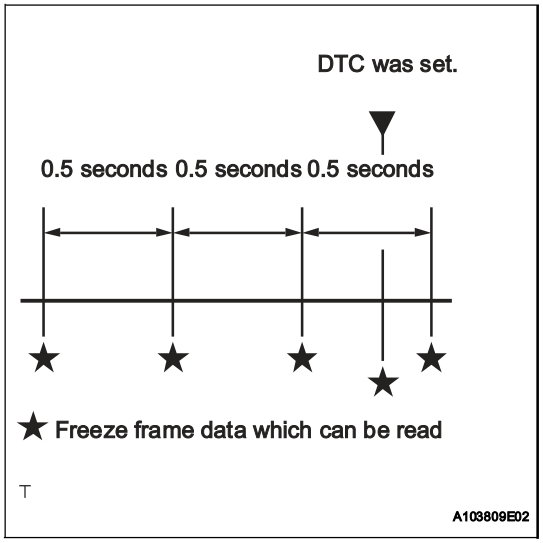

FREEZE FRAME DATA

1. DESCRIPTION

Freeze frame data record the engine conditions (fuel system, calculated load, engine coolant temperature, fuel trim, engine speed, vehicle speed, etc.) when a malfunction is detected. When troubleshooting, it can help determine if the vehicle was running or stopped, the engine was warmed up or not, the air-fuel ratio was LEAN or RICH, and other data, from the time the malfunction occurred.

HINT:

If it is impossible to replicate the problem even though a DTC is detected, confirm the freeze frame data.

The ECM records engine conditions in the form of freeze frame data every 0.5 seconds. Using an intelligent tester, five separate sets of freeze frame data, including the data values at the time when the DTC was set, can be checked.

- 3 data sets before the DTC was set
- 1 data set when the DTC was set
- 1 data set after the DTC was set

These data sets can be used to simulate the conditions of the vehicle around the time of the occurrence of the malfunction. The data may assist in identifying of the cause of the malfunction, and in judging whether it was temporary or not.

2. LIST OF FREEZE FRAME DATA

LABEL (Intelligent Tester Display)	Measure Item/Range	Diagnostic Note
INJECTOR	Injector	-
IGN ADVANCE	Ignition advance	-
CALC LOAD	Calculate load	Calculated load by ECM
VEHICLE LOAD	Vehicle load	-
MAF	Mass air flow volume	If value approximately 0.0 g/sec: • Mass air flow meter power source circuit open or short • VG circuit open or short If value 160.0 g/sec or more: • E2G circuit open
ENGINE SPD	Engine speed	-
VEHICLE SPD	Vehicle speed	Speed indicated on speedometer
COOLANT TEMP	Engine coolant temperature	If value -40°C (-40°F), sensor circuit open If value 140°C (284°F) or more, sensor circuit shorted
INTAKE AIR	Intake air temperature	If value -40°C (-40°F), sensor circuit open If value 140°C (284°F) or more, sensor circuit shorted
AIR-FUEL RATIO	Air-fuel ratio	-
PURGE DENSITY	Learning value of purge density	-
EVAP PURGE FLOW	Purge flow	-
EVAP PURGE VSV	EVAP purge VSV duty ratio	-
KNOCK CRRT VAL	Correction learning value of knocking	-
KNOCK FB VAL	Feedback value of knocking	-

LABEL (Intelligent Tester Display)	Measure Item/Range	Diagnostic Note
ACCEL POS #1	Absolute Accelerator Pedal Position (APP) No. 1	-
ACCEL POS #2	Absolute APP No. 2	-
THROTTLE POS	Throttle position	Read value with ignition switch ON (Do not start engine)
THROTTLE POS	Throttle sensor positioning	Read value with ignition switch ON (Do not start engine)
THROTTLE POS #2	Throttle sensor positioning #2	-
THROTTLE MOT	Throttle motor	-
O2S B1 S2	Heated oxygen sensor output voltage	Performing INJ VOL or A/F CONTROL function of ACTIVE TEST enables technician to check voltage output of sensor
O2S B2 S2	Heated oxygen sensor output voltage	Performing INJ VOL or A/F CONTROL function of ACTIVE TEST enables technician to check voltage output of sensor
AFS B1 S1	A/F sensor output voltage	Performing INJ VOL or A/F CONTROL function of ACTIVE TEST enables technician to check voltage output of sensor
AFS B2 S1	A/F sensor output voltage	Performing INJ VOL or A/F CONTROL function of ACTIVE TEST enables technician to check voltage output of sensor
AFS B2 S1	A/F sensor output current	Performing INJ VOL or A/F CONTROL function of ACTIVE TEST enables technician to check current output of sensor
TOTAL FT #1	Total fuel trim (Bank 1)	-
TOTAL FT #2	Total fuel trim (Bank 2)	-
SHORT FT #1	Short-term fuel trim (Bank 1)	Short-term fuel compensation used to maintain air-fuel ratio at stoichiometric air-fuel ratio
LONG FT #1	Long-term fuel trim (Bank 1)	Overall fuel compensation carried out in long-term to compensate a continual deviation of short-term fuel trim from central valve
SHORT FT #2	Short-term fuel trim (Bank 2)	Short-term fuel compensation used to maintain air-fuel ratio at stoichiometric air-fuel ratio
LONG FT #2	Long-term fuel trim (Bank 2)	Overall fuel compensation carried out in long-term to compensate a continual deviation of short-term fuel trim from central valve
FUEL SYS #1	Fuel system status (Bank1)	• OL (Open Loop): Has not yet satisfied conditions to go closed loop • CL (Closed Loop): Using heated oxygen sensor as feedback for fuel control • OL DRIVE: Open loop due to driving conditions (fuel enrichment) • OL FAULT: Open loop due to detected system fault • CL FAULT: Closed loop but heated oxygen sensor, which used for fuel control, malfunctioning
FUEL SYS #2	Fuel system status (Bank2)	• OL (Open Loop): Has not yet satisfied conditions to go closed loop • CL (Closed Loop): Using heated oxygen sensor as feedback for fuel control • OL DRIVE: Open loop due to driving conditions (fuel enrichment) • OL FAULT: Open loop due to detected system fault • CL FAULT: Closed loop but heated oxygen sensor, which used for fuel control, malfunctioning

LABEL (Intelligent Tester Display)	Measure Item/Range	Diagnostic Note
O2FT B1 S2	Fuel trim at heated oxygen sensor	-
O2FT B2 S2	Fuel trim at heated oxygen sensor	-
AF FT B1 S1	Fuel trim at A/F sensor	-
AFS B1 S1	A/F sensor output current	Performing INJ VOL or A/F CONTROL function of ACTIVE TEST enables technician to check current output of sensor
AF FT B2 S1	Fuel trim at A/F sensor	-
CAT TEMP B1 S1	Catalyst temperature	-
CAT TEMP B2 S1	Catalyst temperature	-
CAT TEMP B1 S2	Catalyst temperature	-
CAT TEMP B2 S2	Catalyst temperature	-
S O2S B1 S2	Sub heated oxygen sensor impedance	-
S O2S B2 S2	Sub heated oxygen sensor impedance	-
INI COOL TEMP	Initial engine coolant temperature	-
INI INTAKE TEMP	Initial intake air temperature	-
INJ VOL	Injection volume	-
STARTER SIG	Starter signal	-
PS SW	Power steering signal	-
PS SIGNAL	Power steering signal (history)	This signal status usually ON until battery terminals disconnected
CTP SW	Closed throttle position switch	-
A/C SIG	A/C signal	-
ELECT LOAD SIG	Electrical load signal	-
STOP LIGHT SW	Stop light switch	-
BATTERY VOLTAGE	Battery voltage	-
ATM PRESSURE	Atmospheric pressure	-
FUEL PMP SP CTL	Fuel pump speed control status	-
ACIS CTRL B2	ACIS VSV status	-
ACT VSV	A/C cut status	-
VVT CTRL B2	VVT control status	-
EVAP (Purge) VSV	EVAP purge VSV	VSV for EVAP controlled by ECM (ground side duty control)
FUEL PUMP / SPD	Fuel pump speed status	-
VVT CTRL B1	VVT control status	-
VACUUM PUMP	Key-off EVAP system pump status	-
EVAP VENT VAL	Key-off EVAP system vent valve status	-
TC/TE1	TC and TE1 terminals of DLC3	-
ENG SPEED #1	Engine speed for cylinder 1	-
ENG SPEED #2	Engine speed for cylinder 2	-
ENG SPEED #3	Engine speed for cylinder 3	-
ENG SPEED #4	Engine speed for cylinder 4	-
ENG SPEED #5	Engine speed for cylinder 5	-
ENG SPEED #6	Engine speed for cylinder 6	-
ENG SPEED ALL	Engine speed for all cylinders	-
VVTL AIM ANGL #1	VVT aim angle	-
VVT CHNG ANGL #1	VVT change angle	-
VVT OCV DUTY B1	VVT OCV operation duty	-
VVTL AIM ANGL #2	VVT aim angle	-
VVT CHNG ANGL #2	VVT change angle	-
VVT OCV DUTY B2	VVT OCV operation duty	-

LABEL (Intelligent Tester Display)	Measure Item/Range	Diagnostic Note
FC IDL	Idle fuel cut	ON: when throttle valve fully closed and engine speed over 3,500 rpm
FC TAU	FC TAU	Fuel cut being performed under very light load to prevent engine combustion from becoming incomplete
IGNITION	Ignition	-
CYL #1	Cylinder #1 misfire rate	Displayed in only idling
CYL #2	Cylinder #2 misfire rate	Displayed in only idling
CYL #3	Cylinder #3 misfire rate	Displayed in only idling
CYL #4	Cylinder #4 misfire rate	Displayed in only idling
CYL #5	Cylinder #5 misfire rate	Displayed in only idling
CYL #6	Cylinder #6 misfire rate	Displayed in only idling
CYL ALL	All cylinder misfire rate	Displayed in only idling
MISFIRE RPM	Misfire RPM	-
MISFIRE LOAD	Misfire load	-
MISFIRE MARGIN	Margin to detect engine misfire	-
ENG RUN TIME	Accumulated engine running time	-
TIME DTC CLEAR	Cumulative time after DTC cleared	-
DIST DTC CLEAR	Accumulated distance from DTC cleared	-
WU CYC DTC CLEAR	Warm-up cycle after DTC cleared	-

CHECK MODE PROCEDURE

HINT:
Intelligent tester only:
Compared to normal mode, check mode is more sensitive to malfunctions. Therefore, check mode can detect the malfunctions that cannot be detected by normal mode.

NOTICE:
All the stored DTCs and freeze frame data are erased if: 1) the ECM is changed from normal mode to check mode or vice versa; or 2) the ignition switch is turned from ON to ACC or OFF while in check mode.
Before changing modes, always check and make a note of any DTCs and freeze frame data.

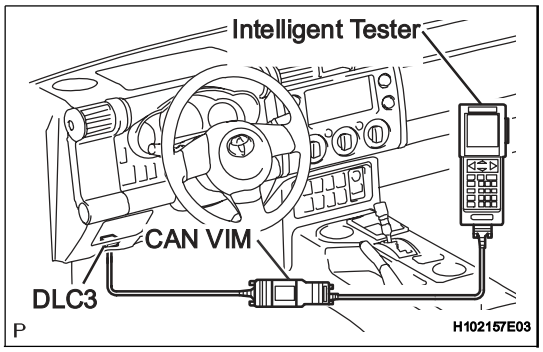

1. CHECK MODE PROCEDURE (Using an intelligent tester)

(a) Check and ensure the following conditions:
  (1) Battery voltage 11 V or more
  (2) Throttle valve fully closed
  (3) Transmission in the P or N positions
  (4) A/C switched OFF
(b) Turn the ignition switch OFF.
(c) Connect an intelligent tester to the DLC3.
(d) Turn the ignition switch ON.
(e) Turn the tester ON.
(f) Select the following menu items: DIAGNOSIS / ENHANCED OBD II / CHECK MODE.
(g) Switch the ECM from normal mode to check mode.
(h) Make sure the MIL flashes as shown in the illustration.

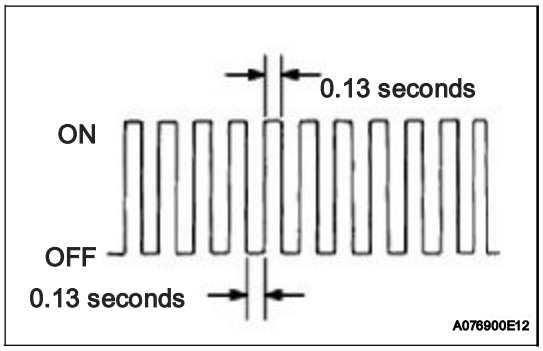

(i) Start the engine.
(j) Make sure the MIL turns off.
(k) Simulate the conditions of the malfunction described by the customer.
(l) Check DTCs and freeze frame data using the tester.

FAIL-SAFE CHART

If any of the following DTCs are set, the ECM enters fail-safe mode to allow the vehicle to be driven temporarily.

DTCs	Components	Fail-Safe Operations	Fail-Safe Deactivation Conditions
P0031, P0032, P0051 and P0052	Air-Fuel Ratio (A/F) Sensor Heater	ECM turns off A/F sensor heater.	Ignition switch OFF
P0037, P0038, P0057 and P0058	Heated Oxygen (HO2) Sensor Heater	ECM turns off HO2 sensor heater.	Ignition switch OFF
P0100, P0102 and P0103	Mass Air Flow (MAF) Meter	ECM calculates ignition timing according to engine speed and throttle valve position.	Pass condition detected
P0110, P0112 and P0113	Intake Air Temperature (IAT) Sensor	ECM estimates IAT to be 20°C (68°F).	Pass condition detected
P0115, P0117 and P0118	Engine Coolant Temperature (ECT) Sensor	ECM estimates ECT to be 80°C (176°F).	Pass condition detected
P0120, P0121, P0122, P0123, P0220, P0222, P0223, P0604, P0606, P0607, P0657, P2102, P2103, P2111, P2112, P2118, P2119 and P2135	Electronic Throttle Control System (ETCS)	ECM cuts off throttle actuator current and throttle valve returned to 6° throttle position by return spring. ECM then adjusts engine output by controlling fuel injection (intermittent fuel-cut) and ignition timing in accordance with accelerator pedal opening angle, to allow vehicle to continue at minimal speed.*	Pass condition detected and then ignition switch turned OFF
P0327, P0328, P0332 and P0333	Knock Sensor	ECM sets ignition timing to maximum retard.	Ignition switch OFF
P0351 to P0356	Igniter	ECM cuts fuel.	Pass condition detected
P2120, P2121, P2122, P2123, P2125, P2127, P2128 and P2138	Accelerator Pedal Position (APP) Sensor	APP sensor has 2 sensor circuits: Main and Sub. If either of circuits malfunctions, ECM controls engine using other circuit. If both of circuits malfunction, ECM regards accelerator pedal as being released. As a result, throttle valve is closed and engine idles.	Pass condition detected and then ignition switch turned OFF

NOTICE:

*** The vehicle can be driven slowly when the accelerator pedal is depressed firmly and slowly. If the accelerator pedal is depressed quickly, the vehicle may speed up and slow down erratically.**

DATA LIST / ACTIVE TEST

1. DATA LIST

HINT:

By reading the DATA LIST displayed on an intelligent tester, you can check values, including those of the switches, sensors, and actuators, without removing any parts. Reading the DATA LIST as the first step of troubleshooting is one method of shortening diagnostic time.

NOTICE:

In the table below, the values listed under Normal Condition are for reference only. Do not depend solely on these values when determining whether or not a part is faulty.

(a) Warm up the engine.
(b) Turn the ignition switch OFF.
(c) Connect an intelligent tester to the DLC3.
(d) Turn the ignition switch ON.
(e) Turn the tester ON.
(f) Select the following menu items: DIAGNOSIS / ENHANCED OBD II / DATA LIST.
(g) Check the values by referring to the table below.

Intelligent Tester Display	Measurement Item: Range (Display)	Normal Condition *	Diagnostic Note
INJECTOR	Injection period of No. 1 cylinder: Min.: 0 ms, Max.: 32.64 ms	1.6 to 2.4 ms: Idling	-
IGN ADVANCE	Ignition timing advance for No. 1 cylinder/ Min.: -64 deg., Max.: 63.5 deg.	BTDC 7 to 24°: Idling	-
CALC LOAD	Calculated load by ECM: Min.: 0 %, Max.: 100 %	• 11.4 to 16.4 %: Idling • 13.1 to 18.9 %: Running without load (2,500 rpm)	-
VEHICLE LOAD	Vehicle load: Min.: 0 %, Max.: 25,700 %	Actual vehicle load	-
MAF	Air flow rate from MAF meter: Min.: 0 g/sec, Max.: 655.35 g/sec	3.2 to 4.7 g/sec: Idling 13.1 to 18.9 g/sec: 2,500 rpm	If value approximately 0.0 g/sec: • Mass air flow meter power source circuit open • VG circuit open or short If value 160.0 g/sec or more: • E2G circuit open
ENGINE SPD	Engine speed: Min.: 0 rpm, Max.: 16,383.75 rpm	650 to 750 rpm: Idling	-
VEHICLE SPD	Vehicle speed: Min.: 0 km/h, Max.: 255 km/h	Actual vehicle speed	Speed indicated on speedometer
COOLANT TEMP	Engine coolant temperature: Min.: -40°C, Max.: 140°C	80 to 100°C (176 to 212°F):After warming up	• If value -40°C (-40°F): sensor circuit open • If value 140°C (284°F) or more: sensor circuit shorted
INTAKE AIR	Intake air temperature: Min.: -40°C, Max.: 140°C	Equivalent to ambient air temperature	• If value -40°C (-40°F): sensor circuit open • If value 140°C (284°F) or more: sensor circuit shorted
AIR-FUEL RATIO	Air-fuel ratio: Min.: 0, Max.: 1.999	0.8 to 1.2: During idling	-
PURGE DENSITY	Learning value of purge density/ Min.: -50 , Max.: 350	-40 to 0 %: Idling	Service data
EVAP PURGE FLOW	Purge flow: Min.: 0 %, Max.: 102.4 %	0 to 100 %: Idling	-

ES

Intelligent Tester Display	Measurement Item: Range (Display)	Normal Condition *	Diagnostic Note
EVAP PURGE VSV	EVAP (Purge) VSV control duty: Min.: 0 %, Max.: 100 %	0 to 100 %: During idling	Order signal from ECM
VAPOR PRES PUMP	Vapor pressure: Min.: 33.853 kPa, Max.: 125.596 kPa	Approximately 100 kPa: Ignition switch ON	EVAP system pressure monitored by canister pressure sensor
VAPOR PRES CALC	Vapor pressure: (calculated) Min.: -5.632 kPa, Max.: 7,153,264 kPa	Approximately 100 kPa: Ignition switch ON	EVAP system pressure monitored by canister pressure sensor
KNOCK CRRT VAL	Correction learning value of knocking: Min.: -64° CA, Max.: 1,984° CA	0 to 22 °CA: Driving, 44 mph (70 km/h)	Service data
KNOCK FB VAL	Feedback value of knocking: Min.: -64° CA, Max.: 1,984° CA	-22 to 0 °CA Driving, 44 mph (70 km/h)	Service data
ACCEL POS #1	Absolute Accelerator Pedal Position (APP) No. 1: Min.: 0 %, Max.: 100 %	10 to 22 %: Accelerator pedal released 54 to 86 %: Accelerator pedal fully depressed	-
ACCEL POS #2	Absolute APP No. 2: Min.: 0 %, Max.: 100 %	12 to 42 %: Accelerator pedal released 66 to 98 %: Accelerator pedal fully depressed	-
ACCEL POS #1	APP sensor No. 1 voltage: Min.: 0 V, Max.: 5 V	0.5 to 1.1 V: Accelerator pedal released. 2.6 to 4.5t V: Accelerator pedal fully depressed.	-
ACCEL POS #2	APP sensor No. 2 voltage: Min.: 0 V, Max.: 5 V	1.2 to 2.0 V: Accelerator pedal released. 3.4 to 5.0 V: Accelerator pedal fully depressed.	-
ACCEL IDL POS	Whether or not accelerator pedal position sensor detecting idle: ON or OFF	ON: Idling	-
THRTL LEARN VAL	Throttle valve fully closed (learned value): Min.: 0 V, Max.: 5 V	0.4 to 0.8 V	-
ACCEL SSR #1 AD	Accelerator fully closed value No.1 (AD): Min.: 0, Max.: 4.9804 V	-	ETCS service data
ACCEL LRN VAL#1	Accelerator fully closed learning value No.1: Min.: 0, Max.: 124.512	-	ETCS service data
ACCEL LRN VAL#2	Accelerator fully closed learning value No.2: Min.: 0, Max.: 124.512	-	ETCS service data
FAIL #1	Whether or not fail safe function executed: ON or OFF	ON: ETCS has failed	-
FAIL #2	Whether or not fail safe function executed: ON or OFF	ON: ETCS has failed	-
ST1	Starter signal: ON or OFF	ON: Cranking	-
SYS GUARD JUDGE	System guard: ON or OFF	-	ETCS service data
OPN MALFUNCTION	Open side malfunction: ON or OFF	-	ETCS service data
THROTTLE POS	Absolute throttle position sensor: Min.: 0 %, Max.: 100 %	• 10 to 24 %: Throttle fully closed • 64 to 96 %: Throttle fully open	Read value with intrusive operation (active test)

Intelligent Tester Display	Measurement Item: Range (Display)	Normal Condition *	Diagnostic Note
THROTTL IDL POS	Whether or not throttle position sensor detecting idle: ON or OFF	ON: Idling	-
THRTL REQ POS	Throttle requirement position: Min.: 0 V, Max.: 5 V	0.5 to 1.0 V: Idling	-
THROTTLE POS	Throttle sensor positioning: Min.: 0 %, Max.: 100 %	0 to 10 %: Idling	Calculated value based on VTA1
THROTTLE POS #2	Throttle sensor positioning #2: Min.: 0 %, Max.: 100 %	-	Calculated value based on VTA2
THROTTLE POS #1	Throttle position No. 1: Min.: 0 V, Max.: 5 V	• 0.5 to 1.2 V: Throttle fully closed • 3.2 to 4.8 V: Throttle fully opened	-
THROTTLE POS #2	Throttle position No. 2: Min.: 0 V, Max.: 5 V	• 2.0 to 2.9 V: Throttle fully closed • 4.6 to 5.0 V: Throttle fully open	Read value with intrusive operation (active test)
THRTL COMND VAL	Throttle position command value: Min.: 0 V, Max.: 4.98 V	0.5 to 4.8 V	ETCS service data
THROTTLE SSR #1	Throttle sensor opener position No. 1: Min.: 0 V, Max.: 4.9804 V	0.6 to 1.0 V	ETCS service data
THROTTLE SSR #2	Throttle sensor opener position No. 2: Min.: 0 V, Max.: 4.9804 V	2.0 to 2.6 V	ETCS service data
THRTL SSR #1 AD	Throttle sensor opener position No.1 (AD): Min.: 0 V, Max.: 4.9804 V	0.6 to 0.9 V	ETCS service data
THROTTLE MOT	Whether or not throttle motor control permitted: ON or OFF	ON: Idling	Read value with ignition switch ON (Do not start engine)
THROTTLE MOT	Throttle motor current: Min.: 0 A, Max.: 80 A	0 to 3.0 A: Idling	-
THROTTLE MOT	Throttle motor: Min.: 0 %, Max.: 100 %	0.5 to 40 %: Idling	-
THRTL MOT (OPN)	Throttle motor duty ratio (open): Min.: 0 %, Max.: 100 %	-	ETCS service data
THRTL MOT (CLS)	Throttle motor duty ratio (close): Min.: 0 %, Max.: 100 %	-	ETCS service data
O2S B1 S2	Heated oxygen sensor output voltage for bank 1 sensor 2: Min.: 0 V, Max.: 1.275 V	0.1 to 0.9 V: Driving 44 mph (70 km/h)	Performing INJ VOL or A/F CONTROL function of ACTIVE TEST enables technician to check voltage output of sensor
O2S B2 S2	Heated oxygen sensor output voltage for bank 2 sensor 2: Min.: 0 V, Max.: 1.275 V	0.1 to 0.9 V: Driving 44 mph (70 km/h)	Performing INJ VOL or A/F CONTROL function of ACTIVE TEST enables technician to check voltage output of sensor
AFS B1 S1	A/F sensor output voltage for bank 1 sensor 1: Min.: 0 V, Max.: 7.999 V	2.8 to 3.8 V: Idling	Performing INJ VOL or A/F CONTROL function of ACTIVE TEST enables technician to check voltage output of sensor
AFS B2 S1	A/F sensor output voltage for bank 2 sensor 1: Min.: 0 V, Max.: 7.999 V	2.8 to 3.8 V: Idling	Performing INJ VOL or A/F CONTROL function of ACTIVE TEST enables technician to check voltage output of sensor
AFS B2 S1	A/F sensor output current for bank 2 sensor 1: Min.: -128 mA, Max.: 127.99 mA	-	Performing INJ VOL or A/F CONTROL function of ACTIVE TEST enables technician to check current output of sensor

ES

Intelligent Tester Display	Measurement Item: Range (Display)	Normal Condition *	Diagnostic Note
TOTAL FT #1	Total fuel trim of bank 1 Average value for fuel trim system of bank 1: Min.: -0.5, Max.: 0.496	-0.2 to 0.2: Idling	-
TOTAL FT #2	Total fuel trim of bank 2 Average value for fuel trim system of bank 2: Min.: -0.5, Max.: 0.496	-0.2 to 0.2: Idling	-
SHORT FT #1	Short-term fuel trim of bank 1: Min.: -100 %, Max.: 99.2%	0 +- 20 %	Short-term fuel compensation used to maintain air-fuel ratio at stoichiometric air-fuel ratio
LONG FT #1	Long-term fuel trim of bank 1: Min.: -100 %, Max.: 99.2 %	0 +- 20 %	Overall fuel compensation carried out in long-term to compensate continual deviation of short-term fuel trim from central value
SHORT FT #2	Short-term fuel trim of bank 2: Min.: -100 %, Max.: 99.2%	0 +- 20 %	Short-term fuel compensation used to maintain air-fuel ratio at stoichiometric air-fuel ratio
LONG FT #2	Long-term fuel trim of bank 2: Min.: -100 %, Max.: 99.2 %	0 +- 20 %	Overall fuel compensation carried out in long-term to compensate continual deviation of short-term fuel trim from central value
FUEL SYS #1	Fuel system status (Bank1): OL or CL or OL DRIVE or OL FAULT or CL FAULT	CL: Idling after warming up	• OL (Open Loop): Has not yet satisfied conditions to go closed loop • CL (Closed Loop): Using heated oxygen sensor as feedback for fuel control • OL DRIVE: Open loop due to driving conditions (fuel enrichment) • OL FAULT: Open loop due to detected system fault • CL FAULT: Closed loop but heated oxygen sensor, which used for fuel control, malfunctioning
FUEL SYS #2	Fuel system status (Bank2): OL or CL or OL DRIVE or OL FAULT or CL FAULT	CL: Idling after warming up	• OL (Open Loop): Has not yet satisfied conditions to go closed loop • CL (Closed Loop): Using heated oxygen sensor as feedback for fuel control. • OL DRIVE: Open loop due to driving conditions (fuel enrichment) • OL FAULT: Open loop due to detected system fault • CL FAULT: Closed loop but heated oxygen sensor, which used for fuel control, malfunctioning
O2FT B1 S2	Short-term fuel trim associated with bank 1 sensor 2: Min.: -100 %, Max.: 99.2 %	-	-
O2FT B2 S2	Short-term fuel trim associated with bank 2 sensor 2: Min.: -100 %, Max.: 99.2 %	-	-
AF FT B1 S1	Short-term fuel trim associated with bank 1 sensor 1: Min.: 0, Max.: 1.999	• Value less than 1 (0.000 to 0.999) = Lean • Stoichiometric air-fuel ratio=1 • Value greater than 1 (1.001 to 1.999) = RICH	-

Intelligent Tester Display	Measurement Item: Range (Display)	Normal Condition *	Diagnostic Note
AFS B1 S1	A/F sensor output current for bank 1 sensor 1: Min.: -128 mA, Max.: 127.99 mA	-	Performing INJ VOL or A/F CONTROL function of ACTIVE TEST enables technician to check current output of sensor
AF FT B2 S1	Short-term fuel trim associated with bank 2 sensor 1: Min.: 0, Max.: 1.999	• Value less than 1 (0.000 to 0.999) = Lean • Stoichiometric air-fuel ratio=1 • Value greater than 1 (1.001 to 1.999) = RICH	-
CAT TEMP B1S1	Catalyst temperature (Bank 1, Sensor 1): Min.: -40, Max.: 6,513.5 °C	-	-
CAT TEMP B2S1	Catalyst temperature (Bank 2, Sensor 1): Min.: -40, Max.: 6,513.5 °C	-	-
CAT TEMP B1S2	Catalyst temperature (Bank 1, Sensor 2): Min.: -40, Max.: 6,513.5 °C	-	-
CAT TEMP B2S2	Catalyst temperature (Bank 2, Sensor 2): Min.: -40, Max.: 6,513.5 °C	-	-
S O2S B1 S2	Sub heated oxygen sensor impedance (Bank 1, Sensor 2): Min.: 0 Ω, Max.: 21247.68 Ω	-	-
S O2S B2 S2	Sub heated oxygen sensor impedance (Bank 2, Sensor 2): Min.: 0 Ω, Max.: 21247.68 Ω	-	-
INI COOL TEMP	Initial engine coolant temperature: Min.: -40°C, Max.: 120°C	Coolant temperature when engine started	Service data
INI INTAKE TEMP	Initial intake air temperature: Min.: -40°C, Max.: 120°C	Intake air temperature when engine started	Service data
INJ VOL	Injection volume (cylinder 1): Min.: 0 ml, Max.: 2.048 ml	0 to 0.5 ml	Quantity of fuel injection volume for 10 times
STARTER SIG	Starter signal: ON or OFF	ON: Cranking	-
PS SW	Power steering signal: ON or OFF	ON: Power steering operation	-
PS SIGNAL	Power steering signal (history): ON or OFF	ON: When steering wheel first turned after battery terminals connected	This signal status usually ON until battery terminals disconnected
CTP SW	Closed throttle position switch: ON or OFF	ON: Throttle fully closed OFF: Throttle open	-
A/C SIGNAL	A/C signal: ON or OFF	ON: A/C ON	-
PNP SW [NSW]	PNP switch status: ON or OFF	ON: P or N position	-
ELECT LOAD SIG	Electrical load signal: ON or OFF	ON: Headlights or defogger turned ON	-
STOP LIGHT SW	Stop light switch: ON or OFF	ON: brake pedal depressed	-
+BM	Whether or not electric throttle control system power inputted: ON or OFF	ON: Ignition switch ON and system normal	-
+BM VOLTAGE	+BM voltage: Min.: 0, Max.: 19.92182	11 to 14 (V): Ignition switch ON and system normal	ETCS service data
BATTERY VOLTAGE	Battery voltage: Min.: 0 V, Max.: 65.535 V	11 to 14 V: Idling	-

Intelligent Tester Display	Measurement Item: Range (Display)	Normal Condition *	Diagnostic Note
ACTUATOR POWER	Actuator power supply: ON or OFF	ON: Idling	ETCS service data
ATM PRESSURE	Atmospheric pressure: Min.: 0 kPa, Max.: 255 kPa	Equivalent to atmospheric pressure (absolute pressure)	-
FUEL PMP SP CTL	Fuel pump speed control status: ON/H or OFF/L	Idling: ON	-
ACIS VSV	ACIS VSV: ON or OFF	-	ON: Open OFF: Closed
ACT VSV	A/C cut status for Active Test: ON or OFF	-	Active Test support data
VVT CTRL B2	VVT control (bank 2) status: ON or OFF	-	Active Test support data
EVAP (Purge) VSV	VSV status for EVAP control: ON or OFF	-	Active Test support data
FUEL PUMP / SPD	Fuel pump/status: ON or OFF	-	Active Test support data
VVT CTRL B1	VVT control (bank 1) status: ON or OFF	-	Active Test support data
VACUUM PUMP	Key-off EVAP system pump status: ON or OFF	-	Active Test support data
EVAP VENT VAL	Key-off EVAP system vent valve status: ON or OFF	-	Active Test support data
TC/TE1	TC and CG (TE1) terminal of DLC3: ON or OFF	-	-
ENG SPEED #1	Engine RPM for cylinder 1: Min.: 0 rpm, Max.: 25,600 rpm	-	Output only when FUEL CUT #1 is performed using ACTIVE TEST
ENG SPEED #2	Engine RPM for cylinder 2: Min.: 0 rpm, Max.: 25,600 rpm	-	Output only when FUEL CUT #2 is performed using ACTIVE TEST
ENG SPEED #3	Engine RPM for cylinder 3: Min.: 0 rpm, Max.: 25,600 rpm	-	Output only when FUEL CUT #3 is performed using ACTIVE TEST
ENG SPEED #4	Engine RPM for cylinder 4: Min.: 0 rpm, Max.: 25,600 rpm	-	Output only when FUEL CUT #4 is performed using ACTIVE TEST
ENG SPEED #5	Engine RPM for cylinder 5: Min.: 0 rpm, Max.: 25,600 rpm	-	Output only when FUEL CUT #5 is performed using ACTIVE TEST
ENG SPEED #6	Engine RPM for cylinder 6: Min.: 0 rpm, Max.: 25,600 rpm	-	Output only when FUEL CUT #6 is performed using ACTIVE TEST
ENG SPEED ALL	Engine RPM for all cylinders: Min.: 0 rpm, Max.: 25,600 rpm	-	Output only when ACTIVE TEST is performed
VVTL AIM ANGL #1 *2	VVT aim angle (bank 1): Min.: 0 %, Max.: 100 %	0 to 100 %	VVT duty signal value during intrusive operation
VVT CHNG ANGL #1 *2	VVT change angle: Min.: 0°FR, Max.: 60°FR	0 to 56 °FR	Displacement angle during intrusive operation
VVT OCV DUTY B1 *2	VVT OCV operation duty: Min.: 0 %, Max.: 100 %	0 to 100 %	Requested duty value for intrusive operation
VVTL AIM ANGL #2 *2	VVT aim angle (bank 2): Min.: 0 %, Max.: 100 %	0 to 100 %	VVT duty signal value during intrusive operation
VVT CHNG ANGL #2 *2	VVT change angle (bank 2): Min.: 0°FR, Max.: 60°FR	0 to 56 °FR	Displacement angle during intrusive operation
VVT OCV DUTY B2 *2	VVT OCV (bank 2) operation duty: Min.: 0 %, Max.: 100 %	0 to 100 %	Requested duty value for intrusive operation
FC IDL	Fuel cut idle: ON or OFF	ON: Fuel cut operation	FC IDL = "ON" when throttle valve fully closed and engine speed over 3,500 rpm

Intelligent Tester Display	Measurement Item: Range (Display)	Normal Condition *	Diagnostic Note
FC TAU	Fuel cut TAU: Fuel cut during very light load: ON or OFF	ON: Fuel cut operating	Fuel cut being performed under very light load to prevent engine combustion from becoming incomplete
IGNITION	Ignition counter: Min.: 0, Max.: 600	0 to 600	-
CYL #1	Misfire ratio of cylinder 1: Min.: 0, Max.: 255	0	This item displayed in only idling
CYL #2	Misfire ratio of cylinder 2: Min.: 0, Max.: 255	0	This item displayed in only idling
CYL #3	Misfire ratio of cylinder 3: Min.: 0, Max.: 255	0	This item displayed in only idling
CYL #4	Misfire ratio of cylinde 4: Min.: 0, Max.: 255	0	This item displayed in only idling
CYL #5	Misfire ratio of cylinder 5: Min.: 0, Max.: 255	0	This item displayed in only idling
CYL #6	Misfire ratio of cylinder 6: Min.: 0, Max.: 255	0	This item displayed in only idling
CYL ALL	All cylinders misfire rate: Min.: 0, Max.: 255	0 to 35	-
MISFIRE RPM	Engine RPM for first misfire range: Min.: 0 rpm, Max.: 6,375 rpm	0 rpm: Misfire 0	-
MISFIRE LOAD	Engine load for first misfire range: Min.: 0 g/rev, Max.: 3.98 g/rev	0 g/rev: Misfire 0	-
MISFIRE MARGIN	Margin to detect engine misfire: Min.: -100 %, Max.: 99.22 %	-100 to 99.2 %	Misfire detecting margin
#CODES	Number of detected DTCs: Min.: 0, Max.: 255	0: No DTC detected	-
CHECK MODE	Check mode: ON or OFF	ON: Check mode ON	See page ES-42
SPD TEST	Check mode result for vehicle speed sensor: COMPL or INCMPL	-	-
MISFIRE TEST	Check mode result for misfire monitor: COMPL or INCMPL	-	-
OXS2 TEST	Check mode result for HO2 sensor (bank 2) : COMPL or INCMPL	-	-
OXS1 TEST	Check mode result for HO2 sensor (bank 1) : COMPL or INCMPL	-	-
A/F SSR TEST B2	Check mode result for air-fuel ratio sensor (bank 2) : COMPL or INCMPL	-	-
A/F SSR TEST B1	Check mode result for air-fuel ratio sensor (bank 1) : COMPL or INCMPL	-	-
MIL	MIL status: ON or OFF	ON: MIL ON	-
MIL ON RUN DIST	MIL ON RUN Distance: Min.: 0 km, Max.: 65,535 km	Drive distance after DTC detected	-
MIL ON RUN TIME	Running time from MIL ON: Min.: 0 min., Max.: 65,535 min.	Equivalent to running time after MIL ON	-

ES

Intelligent Tester Display	Measurement Item: Range (Display)	Normal Condition *	Diagnostic Note
ENG RUN TIME	Engine run time: Min.: 0 s., Max.: 65,535 s.	Time after engine start	Service data
TIME DTC CLEAR	Time after DTC cleared: Min.: 0 min., Max.: 65,535 min.	Equivalent to time after DTCs erased	-
DIST DTC CLEAR	Distance after DTC cleared: Min.: 0 km, Max.: 65,535 km	Equivalent to drive distance after DTCs erased	-
WU CYC DTC CLEAR	Number of warm-up cycles after DTC cleared: Min.: 0, Max.: 255	-	-
OBD CERT	OBD requirement	OBD2	-
#CARB CODES	Number of emission related DTCs	0: No emission related DTC detected	-
COMP MON	Comprehensive component monitor: NOT AVL or AVAIL	-	-
FUEL MON	Fuel system monitor: NOT AVL or AVAIL	-	-
MISFIRE MON	Misfire monitor: NOT AVL or AVAIL	-	-
EGR MON	EGR monitor: NOT AVL or AVAIL	-	-
EGR MON	EGR monitor: COMPL or INCMPL	-	-
O2S (A/FS) HTR	O2S (A/FS) heater monitor: NOT AVL or AVAIL	-	-
O2S (A/FS) HTR	O2S (A/FS) heater monitor: COMPL or INCMPL	-	-
O2S (A/FS) MON	O2S (A/FS) monitor: NOT AVL or AVAIL	-	-
O2S (A/FS) MON	O2S (A/FS) monitor: COMPL or INCMPL	-	-
A/C MON	A/C monitor: NOT AVL or AVAIL	-	-
A/C MON	A/C monitor: COMPL or INCMPL	-	-
2nd AIR MON	2nd air monitor: NOT AVL or AVAIL	-	-
2nd AIR MON	2nd air monitor: COMPL or INCMPL	-	-
EVAP MON	EVAP monitor: NOT AVL or AVAIL	-	-
EVAP MON	EVAP monitor: COMPL or INCMPL	-	-
HTD CAT MON	Heated catalyst monitor: NOT AVL or AVAIL	-	-
HTD CAT MON	Heated catalyst monitor: COMPL or INCMPL	-	-
CAT MON	Catalyst monitor: NOT AVL or AVAIL	-	-
CAT MON	Catalyst monitor: COMPL or INCMPL	-	-
CCM ENA	Comprehensive component monitor: UNABLE or ENABLE	-	-

Intelligent Tester Display	Measurement Item: Range (Display)	Normal Condition *	Diagnostic Note
CCM CMPL	Comprehensive component monitor: COMPL or INCMPL	-	-
FUEL ENA	Fuel system monitor: UNABLE or ENABLE	-	-
FUEL CMPL	Fuel system monitor: COMPL or INCMPL	-	-
MISFIRE ENA	Misfire monitor: UNABLE or ENABLE	-	-
MISFIRE CMPL	Misfire monitor: COMPL or INCMPL	-	-
EGR ENA	EGR monitor: UNABLE or ENABLE	-	-
EGR CMPL	EGR monitor: COMPL or INCMPL	-	-
HTR ENA	O2S (A/FS) heater monitor: UNABLE or ENABLE	-	-
HTR CMPL	O2S (A/FS) heater monitor: COMPL or INCMPL	-	-
O2S (A/FS) ENA	O2S (A/FS) monitor: UNABLE or ENABLE	-	-
O2S (A/FS) CMPL	O2S (A/FS) monitor: COMPL or INCMPL	-	-
ACRF ENA	A/C monitor: UNABLE or ENABLE	-	-
ACRF CMPL	A/C monitor: COMPL or INCMPL	-	-
AIR ENA	2nd air monitor: UNABLE or ENABLE	-	-
AIR CMPL	2nd air monitor: COMPL or INCMPL	-	-
EVAP ENA	EVAP monitor: UNABLE or ENABLE	-	-
EVAP CMPL	EVAP monitor: COMPL or INCMPL	-	-
HCAT ENA	Heated catalyst monitor: UNABLE or ENABLE	-	-
HCAT CMPL	Heated catalyst monitor: COMPL or INCMPL	-	-
CAT ENA	Catalyst monitor: UNABLE or ENABLE	-	-
CAT CMPL	Catalyst monitor: COMPL or INCMPL	-	-
MODEL CODE	Identifying model code	GSJ1##	-
ENGINE TYPE	Identifying engine type	1GRFE	-
CYLINDER NUMBER	Identifying cylinder number: Min.: 0, Max.: 255	6	-
TRANSMISSION	Identifying transmission type: MT or 5AT	MT: Manual transmission 5AT: Automatic transmission	-
DESTINATION	Identifying destination	A (America)	-
MODEL YEAR	Identifying model year: Min.: 1900, Max.: 2155	200#	-
SYSTEM	Identifying engine system	GASLIN (gasoline engine)	-

*1: If no idling conditions are specified, the transmission gear selector lever should be in the N or P position, and the A/C switch and all accessory switches should be OFF.

*2: DATA LIST values are only displayed when performing the following ACTIVE TESTs: VVT B1 or VVT B2. For other ACTIVE TESTs, the DATA LIST value will be 0.

2. ACTIVE TEST

HINT:

Performing an ACTIVE TEST enables components including the relays, VSV (Vacuum Switching Valve), and actuators, to be operated without removing any parts. The ACTIVE TEST can be performed with an intelligent tester. Performing an ACTIVE TEST as the first step of troubleshooting is one method of shortening diagnostic time.

DATA LIST can be displayed during ACTIVE TESTs.

(a) Connect an intelligent tester to the DLC3.
(b) Turn the ignition switch ON.
(c) Turn the tester ON.
(d) Select the following menu items: DIAGNOSIS / ENHANCED OBD II / ACTIVE TEST.
(e) Perform the ACTIVE TEST by referring to the table below.

Intelligent Tester Displays	Test Details	Control Ranges	Diagnostic Notes
INJ VOL	Change injection volume	Between -12.5 % and 24.8 %	• All injectors tested at same time • Perform test at less than 3,000 rpm • Injection volume can be changed in 0.1 % graduations within control range
A/F CONTROL	Change injection volume	Lower by 12.5 % or increase by 25 %	• Perform test at less than 3,000 rpm • A/F CONTROL enables checking and graphing of A/F (Air Fuel Ratio) sensor and Heated Oxygen (HO2) sensor voltage outputs • To conduct test, select following menu items: ACTIVE TEST / A/F CONTROL / USER DATA / AFS B1S1 and O2S B1S2, and press YES and ENTER followed by F4
FUEL PMP SP CTL	Fuel pump speed control	ON (low speed)/ OFF (high speed)	-
INTAKE CTL VSV1	ACIS VSV	ON/OFF	-
EVAP VSV (ALONE)	Activate EVAP VSV control	ON/OFF	-
A/C CUT SIG	Control A/C cut signal	ON/OFF	-
FUEL PUMP/SPD	Activate fuel pump (C/OPN Relay)	ON/OFF	-
TC/TE1	Turn on and off TC and CG (TE1) connection	ON/OFF	• ON: TC and CG (TE1) connected • OFF: TC and CG (TE1) disconnected

Intelligent Tester Displays	Test Details	Control Ranges	Diagnostic Notes
FC IDL PROHBT	Prohibit idling fuel cut control	ON/OFF	-
ETCS OPEN SLOW	Throttle actuator	ON: throttle valve opens slowly	Test possible when following conditions met: • Ignition switch ON • Engine does not start • Fully depressing accelerator pedal (APP: 58 degrees or more)
ETCS CLOSE SLOW	Throttle actuator	ON: throttle valve closes slowly	
ETCS OPEN FAST	Throttle actuator	ON: throttle valve opens fast	
ETCS CLOSE FAST	Throttle actuator	ON: throttle valve closes fast	
VVT B1	Control the VVT (bank 1)	-128 to 127 % This value added to present OCV control duty 100 %: Maximum advance -100 % : Maximum retard	• Engine stall or rough idle when VVT actuator operated by 100 % • Test possible during engine idling
VVT CTRL B1	Turn on and off OCV (Oil Control Valve)	ON/OFF	• Engine stalls or idles roughly when OCV turned ON • Normal engine running or idling when OCV off
VVT B2	Control the VVT (bank 2)	-128 to 127 % This value added to present OCV control duty 100 %: Maximum advance -100 % : Maximum retard	• Engine stall or rough idle when VVT actuator operated by 100 % • Test possible during engine idling
VVT CTRL B2	Turn on and off OCV (Oil Control Valve)	ON/OFF	• Engine stalls or idles roughly when OCV turned ON • Normal engine running or idling when OCV off
VACUUM PUMP	Leak detection pump	ON/OFF	-
VENT VALVE	Vent valve	ON/OFF	-
FUEL CUT #1	Cylinder #1 injector fuel cut	ON/OFF	Test possible during vehicle stopping and engine idling
FUEL CUT #2	Cylinder #2 injector fuel cut	ON/OFF	
FUEL CUT #3	Cylinder #3 injector fuel cut	ON/OFF	
FUEL CUT #4	Cylinder #4 injector fuel cut	ON/OFF	
FUEL CUT #5	Cylinder #5 injector fuel cut	ON/OFF	
FUEL CUT #6	Cylinder #6 injector fuel cut	ON/OFF	
FUEL CUT ALL	All cylinder injectors fuel cut	ON/OFF	
COMPRESS CHECK	All cylinder injectors fuel cut and ignition stop	ON/OFF	*

HINT:
*: When cranking the engine, each cylinder measures the engine rpm.
In this ACTIVE TEST, the fuel and ignition of all cylinders are cut, and cranking occurs for approximately 10 seconds. Then, each cylinder measures the engine rpm. If a cylinder's engine rpm is higher than the others, that cylinder's compression pressure is compared to the others, and is determined whether it is low or not.

1. Warm up the engine.
2. Turn the ignition switch off.
3. Connect the intelligent tester to the DLC3.
4. Turn the ignition switch ON and turn the intelligent tester on.

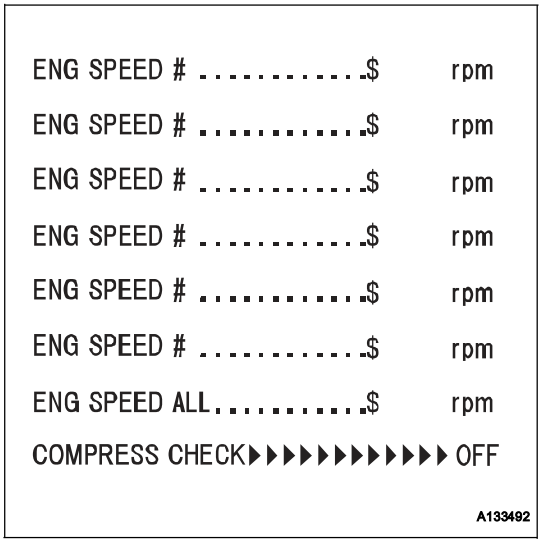

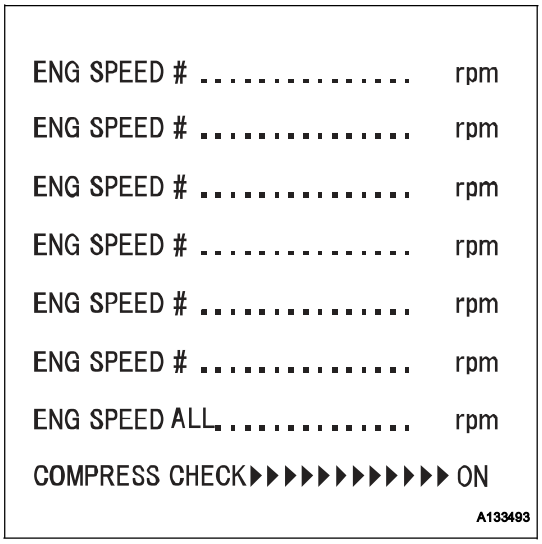

5. Select the following menu items: DIAGNOSIS / ENHANCED OBD II / ACTIVE TEST / COMPRESS CHECK.
   HINT:
   If the results are not displayed normally, select the display items from the DATA LIST before performing the ACTIVE TEST. Select the following menu items: DIAGNOSIS / ENHANCED OBD II / DATA LIST / USER DATA / ENG SPEED #1, ENG SPEED #2, ENG SPEED #3, ENG SPEED #4, ENG SPEED #5, ENG SPEED #6 (Press the YES button to change the ENG SPEED #1 to #6) and then press the ENTER button.
6. While the engine is not running, press the RIGHT or LEFT button to change the COMPRESS CHECK to ON.
   HINT:
   After performing the above procedure, the ACTIVE TEST's COMPRESS CHECK will start. Fuel injection for all cylinders is prohibited, and each cylinder's engine rpm measurement will enter standby mode.
7. Fully open the throttle.
8. Crank the engine for about 10 seconds.
9. Monitor the engine speed (ENG SPEED #1 to #6) displayed on the tester.
   HINT:
   At first, the tester's display will show each cylinder's engine rpm measurement to be extremely high. After approximately 10 seconds of engine cranking, each cylinder's engine rpm measurement will change to the actual engine rpm.
   NOTICE:
   - **After the ACTIVE TEST's COMPRESS CHECK is turned ON, it will automatically turn off after 255 seconds.**
   - **When the COMPRESS CHECK test is OFF and the engine is cranked, the engine will start.**
   - **If the COMPRESS CHECK test needs to be performed after it is turned ON and performed once, press EXIT to return to the ACTIVE TEST menu screen. Then perform the COMPRESS CHECK test again.**
   - **Use a fully-charged battery.**

3. SYSTEM CHECK

HINT:

Performing a SYSTEM CHECK enables the system, which consists of multiple actuators, to be operated without removing any parts. In addition, it can show whether or not any DTCs are set, and can detect potential malfunctions in the system. The SYSTEM CHECK can be performed with an intelligent tester.

(a) Connect an intelligent tester to the DLC3.
(b) Turn the ignition switch ON.
(c) Turn the tester ON.
(d) Select the following menu items: DIAGNOSIS / ENHANCED OBD II / SYSTEM CHECK.
(e) Perform the SYSTEM CHECK by referring to the table below.

Intelligent Tester Displays	Test Details	Recommended Fuel Temperatures	Diagnostic Notes
EVAP SYS CHECK (AUTO OPERATION)	Perform 5 steps in order to operate EVAP key-off monitor automatically	35°C (95°F) or less	• If no DTCs in PENDING CODE after performing this test, system functioning normally • Refer to EVAP Inspection Procedure (See page ES-350)
EVAP SYS CHECK (MANUAL OPERATION)	Perform 5 steps in order to operate EVAP key-off monitor manually	35°C (95°F) or less	• Used to detect malfunctioning parts • Refer to EVAP Inspection Procedure (See page ES-350)

DIAGNOSTIC TROUBLE CODE CHART

HINT:
Factors such as instrument type may cause readings to differ slightly from stated values. If any DTCs are displayed during a check mode DTC check, check the circuit for the DTCs listed in the table below. For details of each DTC, refer to the page indicated.
*: MIL flashes when a catalyst damaged misfire is detected.

ES

DTC No.	Detection Item	Trouble Areas	MIL	Memory	See page
P0010	Camshaft Position "A" Actuator Circuit (Bank 1)	- Open or short in Oil control valve (OCV) (bank 1) circuit - OCV (bank 1) - ECM	Comes on	DTC stored	ES-67
P0011	Camshaft Position "A" - Timing Over-Advanced or System Performance (Bank 1)	- Valve timing - OCV (bank 1) - OCV filter - Camshaft timing gear assembly - ECM	Comes on	DTC stored	ES-71
P0012	Camshaft Position "A" - Timing Over-Retarded (Bank 1)	- Same as DTC P0011	Comes on	DTC stored	ES-71
P0016	Crankshaft Position - Camshaft Position Correlation (Bank 1 Sensor A)	- Mechanical system (Timing chain has jumped tooth or chain stretched) - ECM	Comes on	DTC stored	ES-76
P0018	Crankshaft Position - Camshaft Position Correlation (Bank 2 Sensor A)	- Same as DTC P0016	Comes on	DTC stored	ES-76
P0020	Camshaft Position "A" Actuator Circuit (Bank 2)	- Open or short in OCV (bank 2) circuit - OCV (bank 2) - ECM	Comes on	DTC stored	ES-67
P0021	Camshaft Position "A" - Timing Over-Advanced or System Performance (Bank 2)	- Valve timing - OCV (bank 2) - OCV filter - Camshaft timing gear assembly - ECM	Comes on	DTC stored	ES-71
P0022	Camshaft Position "A" - Timing Over-Retarded (Bank 2)	- Same as DTC P0021	Comes on	DTC stored	ES-71
P0031	Oxygen (A/F) Sensor Heater Control Circuit Low (Bank 1 Sensor 1)	- Open in Air-fuel Ratio (A/F) sensor heater circuit - A/F sensor heater - A/F sensor heater relay - ECM	Comes on	DTC stored	ES-78
P0032	Oxygen (A/F) Sensor Heater Control Circuit High (Bank 1 Sensor 1)	- Short in A/F sensor heater circuit - A/F sensor heater - A/F sensor heater relay - ECM	Comes on	DTC stored	ES-78
P0037	Oxygen Sensor Heater Control Circuit Low (Bank 1 Sensor 2)	- Open in Heated Oxygen (HO2) sensor heater circuit - HO2 sensor heater - EFI relay - ECM	Comes on	DTC stored	ES-83
P0038	Oxygen Sensor Heater Control Circuit High (Bank 1 Sensor 2)	- Short in HO2 sensor heater circuit - HO2 sensor heater - EFI relay - ECM	Comes on	DTC stored	ES-83
P0051	Oxygen (A/F) Sensor Heater Control Circuit Low (Bank 2 Sensor 1)	- Same as DTC P0031	Comes on	DTC stored	ES-78
P0052	Oxygen (A/F) Sensor Heater Control Circuit High (Bank 2 Sensor 1)	- Same as DTC P0032	Comes on	DTC stored	ES-78

DTC No.	Detection Item	Trouble Areas	MIL	Memory	See page
P0057	Oxygen Sensor Heater Control Circuit Low (Bank 2 Sensor 2)	- Same as DTC P0037	Comes on	DTC stored	ES-83
P0058	Oxygen Sensor Heater Control Circuit High (Bank 2 Sensor 2)	- Same as DTC P0038	Comes on	DTC stored	ES-83
P0100	Mass or Volume Air Flow Circuit	- Open or short in Mass Air Flow (MAF) meter circuit - MAF meter - ECM	Comes on	DTC stored	ES-90
P0101	Mass Air Flow Circuit Range / Performance Problem	- MAF meter - Air induction system - PCV hose connections	Comes on	DTC stored	ES-97
P0102	Mass or Volume Air Flow Circuit Low Input	- Open in MAF meter circuit - Short in ground circuit - MAF meter - ECM	Comes on	DTC stored	ES-90
P0103	Mass or Volume Air Flow Circuit High Input	- Short in MAF meter circuit (+B circuit) - MAF meter - ECM	Comes on	DTC stored	ES-90
P0110	Intake Air Temperature Circuit	- Open or short in Intake Air Temperature (IAT) sensor circuit - IAT sensor (built into MAF meter) - ECM	Comes on	DTC stored	ES-100
P0111	Intake Air Temperature Sensor Gradient Too High	- IAT sensor (built into MAF meter)	Comes on	DTC stored	ES-106
P0112	Intake Air Temperature Circuit Low Input	- Short in IAT sensor circuit - IAT sensor (built into MAF meter) - ECM	Comes on	DTC stored	ES-100
P0113	Intake Air Temperature Circuit High Input	- Open in IAT sensor circuit - IAT sensor (built into MAF meter) - ECM	Comes on	DTC stored	ES-100
P0115	Engine Coolant Temperature Circuit	- Open or short in Engine Coolant Temperature (ECT) sensor circuit - ECT sensor - ECM	Comes on	DTC stored	ES-109
P0116	Engine Coolant Temperature Circuit Range / Performance Problem	- Thermostat - ECT sensor	Comes on	DTC stored	ES-114
P0117	Engine Coolant Temperature Circuit Low Input	- Short in ECT sensor circuit - ECT sensor - ECM	Comes on	DTC stored	ES-109
P0118	Engine Coolant Temperature Circuit High Input	- Open in ECT sensor circuit - ECT sensor - ECM	Comes on	DTC stored	ES-109
P0120	Throttle / Pedal Position Sensor / Switch "A" Circuit	- Throttle Position (TP) sensor (built into throttle body) - ECM	Comes on	DTC stored	ES-117
P0121	Throttle / Pedal Position Sensor / Switch "A" Circuit Range / Performance Problem	- TP sensor (built into throttle body)	Comes on	DTC stored	ES-125
P0122	Throttle / Pedal Position Sensor / Switch "A" Circuit Low Input	- TP sensor (built into throttle body) - Short in VTA1 circuit - Open in VC circuit - ECM	Comes on	DTC stored	ES-117
P0123	Throttle / Pedal Position Sensor / Switch "A" Circuit High Input	- TP sensor (built into throttle body) - Open in VTA1 circuit - Open in E2 circuit - Short between VC and VTA1 circuits - ECM	Comes on	DTC stored	ES-117
P0125	Insufficient Coolant Temperature for Closed Loop Fuel Control	- Cooling system - ECT sensor - Thermostat	Comes on	DTC stored	ES-127

DTC No.	Detection Item	Trouble Areas	MIL	Memory	See page
P0128	Coolant Thermostat (Coolant Temperature Below Thermostat Regulating Temperature)	- Thermostat - Cooling system - ECT sensor - ECM	Comes on	DTC stored	ES-130
P0136	Oxygen Sensor Circuit Malfunction (Bank 1 Sensor 2)	- Open or short in HO2 sensor (bank 1 sensor 2) circuit - HO2 sensor (bank 1 sensor 2) - HO2 sensor heater (bank 1 sensor 2) - A/F sensor (bank 1 sensor 1) - EFI relay - Gas leakage from exhaust system	Comes on	DTC stored	ES-133
P0137	Oxygen Sensor Circuit Low Voltage (Bank 1 Sensor 2)	- Open in HO2 sensor (bank 1 sensor 2) circuit - HO2 sensor (bank 1 sensor 2) - HO2 sensor heater (bank 1 sensor 2) - EFI relay - Gas leakage from exhaust system	Comes on	DTC stored	ES-133
P0138	Oxygen Sensor Circuit High Voltage (Bank 1 Sensor 2)	- Short in HO2 sensor (bank 1 sensor 2) circuit - HO2 sensor (bank 1 sensor 2) - ECM internal circuit malfunction	Comes on	DTC stored	ES-133
P0141	Oxygen Sensor Heater Circuit Malfunction (Bank 1 Sensor 2)	- Open or short in HO2 sensor heater circuit - HO2 sensor heater - EFI relay - ECM	Comes on	DTC stored	ES-83
P0156	Oxygen Sensor Circuit Malfunction (Bank 2 Sensor 2)	- Open or short in HO2 sensor (bank 2 sensor 2) circuit - HO2 sensor (bank 2 sensor 2) - HO2 sensor heater (bank 2 sensor 2) - A/F sensor (bank 2 sensor 1) - EFI relay - Gas leakage from exhaust system	Comes on	DTC stored	ES-133
P0157	Oxygen Sensor Circuit Low Voltage (Bank 2 Sensor 2)	- Open in HO2 sensor (bank 2 sensor 2) circuit - HO2 sensor (bank 2 sensor 2) - HO2 sensor heater (bank 2 sensor 2) - EFI relay - Gas leakage from exhaust system	Comes on	DTC stored	ES-133
P0158	Oxygen Sensor Circuit High Voltage (Bank 2 Sensor 2)	- Short in HO2 sensor (bank 2 sensor 2) circuit - HO2 sensor (bank 2 sensor 2) - ECM internal circuit malfunction	Comes on	DTC stored	ES-133
P0161	Oxygen Sensor Heater Circuit Malfunction (Bank 2 Sensor 2)	- Same as DTC P0141	Comes on	DTC stored	ES-83
P0171	System Too Lean (Bank 1)	- Air induction system - Injector blockage - MAF meter - ECT sensor - Fuel pressure - Gas leakage from exhaust system - Open or short in A/F sensor (bank 1 sensor 1) circuit - A/F sensor (bank 1 sensor 1) - A/F sensor heater (bank 1 sensor 1) - A/F sensor heater relay - A/F sensor heater and A/F sensor heater relay circuits - PCV hose connections - PCV valve and hose - ECM	Comes on	DTC stored	ES-152

DTC No.	Detection Item	Trouble Areas	MIL	Memory	See page
P0172	System Too Rich (Bank 1)	- Injector leakage or blockage - MAF meter - ECT sensor - Ignition system - Fuel pressure - Gas leakage from exhaust system - Open or short in A/F sensor (bank 1 sensor 1) circuit - A/F sensor (bank 1 sensor 1) - A/F sensor heater (bank 1 sensor 1) - A/F sensor heater relay - A/F sensor heater and A/F sensor heater relay circuits - ECM	Comes on	DTC stored	ES-152
P0174	System Too Lean (Bank 2)	- Air induction system - Injector blockage - MAF meter - ECT sensor - Fuel pressure - Gas leakage from exhaust system - Open or short in A/F sensor (bank 2 sensor 1) circuit - A/F sensor (bank 2 sensor 1) - A/F sensor heater (bank 2 sensor 1) - A/F sensor heater relay - A/F sensor heater and A/F sensor heater relay circuits - PCV hose connections - PCV valve and hose - ECM	Comes on	DTC stored	ES-152
P0175	System Too Rich (Bank 2)	- Injector leakage or blockage - MAF meter - ECT sensor - Ignition system - Fuel pressure - Gas leakage from exhaust system - Open or short in A/F sensor (bank 2 sensor 1) circuit - A/F sensor (bank 2 sensor 1) - A/F sensor heater (bank 2 sensor 1) - A/F sensor heater relay - A/F sensor heater and A/F sensor heater relay circuits - ECM	Comes on	DTC stored	ES-152
P0220	Throttle / Pedal Position Sensor / Switch "B" Circuit	- TP sensor (built into throttle body) - ECM	Comes on	DTC stored	ES-117
P0222	Throttle / Pedal Position Sensor / Switch "B" Circuit Low Input	- TP sensor (built into throttle body) - Short in VTA2 circuit - Open in VC circuit - ECM	Comes on	DTC stored	ES-117
P0223	Throttle / Pedal Position Sensor / Switch "B" Circuit High Input	- TP sensor (built into throttle body) - Open in VTA2 circuit - Open in E2 circuit - Short between VC and VTA2 circuits - ECM	Comes on	DTC stored	ES-117
P0230	Fuel Pump Primary Circuit	- Open or short in fuel pump relay circuit - Fuel pump relay - ECM	-	DTC stored	ES-164

DTC No.	Detection Item	Trouble Areas	MIL	Memory	See page
P0300	Random / Multiple Cylinder Misfire Detected	- Open or short in engine wire harness - Connector connection - Vacuum hose connection - Ignition system - Injector - Fuel pressure - MAF meter - ECT sensor - Compression pressure - Valve clearance - Valve timing - PCV hose connections - PCV valve and hose - Air induction system - ECM	Comes on/ Blinks *	DTC stored	ES-169
P0301	Cylinder 1 Misfire Detected	- Same as DTC P0300	Comes on/ Blinks *	DTC stored	ES-169
P0302	Cylinder 2 Misfire Detected	- Same as DTC P0300	Comes on/ Blinks *	DTC stored	ES-169
P0303	Cylinder 3 Misfire Detected	- Same as DTC P0300	Comes on/ Blinks *	DTC stored	ES-169
P0304	Cylinder 4 Misfire Detected	- Same as DTC P0300	Comes on/ Blinks *	DTC stored	ES-169
P0305	Cylinder 5 Misfire Detected	- Same as DTC P0300	Comes on/ Blinks *	DTC stored	ES-169
P0306	Cylinder 6 Misfire Detected	- Same as DTC P0300	Comes on/ Blinks *	DTC stored	ES-169
P0327	Knock Sensor 1 Circuit Low Input (Bank 1 or Single Sensor)	- Short in knock sensor 1 circuit - Knock sensor 1 - ECM	Comes on	DTC stored	ES-181
P0328	Knock Sensor 1 Circuit High Input (Bank 1 or Single Sensor)	- Open in knock sensor 1 circuit - Knock sensor 1 - ECM	Comes on	DTC stored	ES-181
P0332	Knock Sensor 2 Circuit Low Input (Bank 2)	- Short in knock sensor 2 circuit - Knock sensor 2 - ECM	Comes on	DTC stored	ES-181
P0333	Knock Sensor 2 Circuit High Input (Bank 2)	- Open in knock sensor 2 circuit - Knock sensor 2 - ECM	Comes on	DTC stored	ES-181
P0335	Crankshaft Position Sensor "A" Circuit	- Open or short in Crankshaft Position (CKP) sensor circuit - CKP sensor - Sensor plate (CKP sensor plate) - ECM	Comes on	DTC stored	ES-187
P0339	Crankshaft Position Sensor "A" Circuit Intermittent	- Same as DTC P0335	-	DTC stored	ES-187
P0340	Camshaft Position Sensor "A" Circuit (Bank 1 or Single Sensor)	- Open or short in Variable Valve Timing (VVT) sensor circuit - VVT sensor - Camshaft timing gear - Jumped tooth of timing chain - ECM	Comes on	DTC stored	ES-192
P0342	Camshaft Position Sensor "A" Circuit Low Input (Bank 1 or Single Sensor)	- Same as DTC P0340	Comes on	DTC stored	ES-192
P0343	Camshaft Position Sensor "A" Circuit High Input (Bank 1 or Single Sensor)	- Same as DTC P0340	Comes on	DTC stored	ES-192
P0345	Camshaft Position Sensor "A" Circuit (Bank 2)	- Same as DTC P0340	Comes on	DTC stored	ES-192
P0347	Camshaft Position Sensor "A" Circuit Low Input (Bank 2)	- Same as DTC P0340	Comes on	DTC stored	ES-192

DTC No.	Detection Item	Trouble Areas	MIL	Memory	See page
P0348	Camshaft Position Sensor "A" Circuit High Input (Bank 2)	- Same as DTC P0340	Comes on	DTC stored	ES-192
P0351	Ignition Coil "A" Primary / Secondary Circuit	- Ignition system - Open or short in IGF1 or IGT circuit (1 to 6) between ignition coil with igniter and ECM - No. 1 to No. 6 ignition coils with igniters - ECM	Comes on	DTC stored	ES-199
P0352	Ignition Coil "B" Primary / Secondary Circuit	- Same as DTC P0351	Comes on	DTC stored	ES-199
P0353	Ignition Coil "C" Primary / Secondary Circuit	- Same as DTC P0351	Comes on	DTC stored	ES-199
P0354	Ignition Coil "D" Primary / Secondary Circuit	- Same as DTC P0351	Comes on	DTC stored	ES-199
P0355	Ignition Coil "E" Primary / Secondary Circuit	- Same as DTC P0351	Comes on	DTC stored	ES-199
P0356	Ignition Coil "F" Primary / Secondary Circuit	- Same as DTC P0351	Comes on	DTC stored	ES-199
P0420	Catalyst System Efficiency Below Threshold (Bank 1)	- Gas leakage from exhaust system - A/F sensor (bank 1 sensor 1) - HO2 sensor (bank 1 sensor 2) - Exhaust manifold (TWC)	Comes on	DTC stored	ES-210
P0430	Catalyst System Efficiency Below Threshold (Bank 2)	- Gas leakage from exhaust system - A/F sensor (bank 2 sensor 1) - HO2 sensor (bank 2 sensor 2) - Exhaust manifold (TWC)	Comes on	DTC stored	ES-210
P043E	Evaporative Emission System Reference Orifice Clog Up	- Canister pump module (Reference orifice, leak detection pump, vent valve) - Connector/wire harness (Canister pump module - ECM) - EVAP system hose (pipe from air inlet port to canister pump module, canister filter, fuel tank vent hose) - ECM	Comes on	DTC stored	ES-218
P043F	Evaporative Emission System Reference Orifice High Flow	- Same as DTC P043E	Comes on	DTC stored	ES-218
P0441	Evaporative Emission Control System Incorrect Purge Flow	- Purge VSV - Connector/wire harness (Purge VSV - ECM) - Canister pump module - Leakage from EVAP system - Leakage from EVAP line (Purge VSV - Intake manifold) - ECM	Comes on	DTC stored	ES-223
P0450	Evaporative Emission Control System Pressure Sensor / Switch	- Canister pump module - EVAP system hose (pipe from air inlet port to canister pump module, canister filter, fuel tank vent hose) - ECM	Comes on	DTC stored	ES-230
P0451	Evaporative Emission Control System Pressure Sensor Range / Performance	- Canister pump module - Connector/wire harness (Canister pump module - ECM) - EVAP system hose (pipe from air inlet port to canister pump module, canister filter, fuel tank vent hose) - ECM	Comes on	DTC stored	ES-230
P0452	Evaporative Emission Control System Pressure Sensor / Switch Low Input	- Same as DTC P0451	Comes on	DTC stored	ES-230
P0453	Evaporative Emission Control System Pressure Sensor / Switch High Input	- Same as DTC P0451	Comes on	DTC stored	ES-230

DTC No.	Detection Item	Trouble Areas	MIL	Memory	See page
P0455	Evaporative Emission Control System Leak Detected (Gross Leak)	- Fuel cap (loose) - Leakage from EVAP line (Canister - Fuel tank) - Leakage from EVAP line (Purge VSV - Canister) - Canister pump module - Leakage from fuel tank - Leakage from canister	Comes on	DTC stored	ES-239
P0456	Evaporative Emission Control System Leak Detected (Very Small Leak)	- Same as DTC P0455	Comes on	DTC stored	ES-239
P0500	Vehicle Speed Sensor "A"	- Open or short in speed signal circuit - Vehicle speed sensor - Combination meter - ECM - Skid control ECU	Comes on	DTC stored	ES-243
P0504	Brake Switch "A" / "B" Correlation	- Short in stop light switch signal circuit - STOP fuse - Stop light switch - ECM	-	DTC stored	ES-247
P0505	Idle Control System Malfunction	- ETCS - Air induction system - PCV hose connections - ECM	Comes on	DTC stored	ES-251
P050A	Cold Start Idle Air Control System Performance	- Throttle body assembly - MAF meter - Air induction system - PCV hose connections - VVT system - Air cleaner filter element - ECM	Comes on	DTC stored	ES-255
P050B	Cold Start Ignition Timing Performance	- Same as DTC P050A	Comes on	DTC stored	ES-255
P0560	System Voltage	- Open in back up power source circuit - EFI fuse - ECM	Comes on	DTC stored	ES-261
P0604	Internal Control Module Random Access Memory (RAM) Error	- ECM	Comes on	DTC stored	ES-265
P0606	ECM / PCM Processor	- ECM	Comes on	DTC stored	ES-265
P0607	Control Module Performance	- ECM	Comes on	DTC stored	ES-265
P0617	Starter Relay Circuit High	- Park/Neutral Position (PNP) switch (A/T) - Clutch start switch (M/T) - Starter relay circuit - Ignition switch - ECM	Comes on	DTC stored	ES-267
P0630	VIN not Programmed or Mismatch - ECM / PCM	- ECM	Comes on	DTC stored	ES-273
P0657	Actuator Supply Voltage Circuit / Open	- ECM	Comes on	DTC stored	ES-265
P0724	Brake Switch "B" Circuit High	- Short in stop light switch signal circuit - Stop light switch - ECM	Comes on	DTC stored	ES-275
P1500	AC Inverter Malfunction	- Open or short in speed signal circuit - Short between idle-up signal and +B circuits - Voltage Inverter - ECM	Comes on	DTC stored	ES-278
P2102	Throttle Actuator Control Motor Circuit Low	- Open in throttle actuator circuit - Throttle actuator - ECM	Comes on	DTC stored	ES-282

DTC No.	Detection Item	Trouble Areas	MIL	Memory	See page
P2103	Throttle Actuator Control Motor Circuit High	- Short in throttle actuator circuit - Throttle actuator - Throttle valve - Throttle body assembly - ECM	Comes on	DTC stored	ES-282
P2111	Throttle Actuator Control System - Stuck Open	- Throttle actuator - Throttle body assembly - Throttle valve	Comes on	DTC stored	ES-286
P2112	Throttle Actuator Control System - Stuck Closed	- Same as DTC P2111	Comes on	DTC stored	ES-286
P2118	Throttle Actuator Control Motor Current Range / Performance	- Open in ETCS power source circuit - ETCS fuse - ECM	Comes on	DTC stored	ES-289
P2119	Throttle Actuator Control Throttle Body Range / Performance	- ETCS - ECM	Comes on	DTC stored	ES-293
P2120	Throttle / Pedal Position Sensor / Switch "D" Circuit	- Accelerator Pedal Position (APP) sensor - ECM	Comes on	DTC stored	ES-296
P2121	Throttle / Pedal Position Sensor / Switch "D" Circuit Range / Performance	- APP sensor - ECM	Comes on	DTC stored	ES-304
P2122	Throttle / Pedal Position Sensor / Switch "D" Circuit Low Input	- APP sensor - Open in VCP1 circuit - Open or ground short in VPA circuit - ECM	Comes on	DTC stored	ES-296
P2123	Throttle / Pedal Position Sensor / Switch "D" Circuit High Input	- APP sensor - Open in EPA circuit - ECM	Comes on	DTC stored	ES-296
P2125	Throttle / Pedal Position Sensor / Switch "E" Circuit	- APP sensor - ECM	Comes on	DTC stored	ES-296
P2127	Throttle / Pedal Position Sensor / Switch "E" Circuit Low Input	- APP sensor - Open in VCP2 circuit - Open or ground short in VPA2 circuit - ECM	Comes on	DTC stored	ES-296
P2128	Throttle / Pedal Position Sensor / Switch "E" Circuit High Input	- APP sensor - Open in EPA2 circuit - ECM	Comes on	DTC stored	ES-296
P2135	Throttle / Pedal Position Sensor / Switch "A" / "B" Voltage Correlation	- Short between VTA1 and VTA2 circuits - TP sensor (built into throttle body) - ECM	Comes on	DTC stored	ES-117
P2138	Throttle / Pedal Position Sensor / Switch "D" / "E" Voltage Correlation	- Short between VPA and VPA2 circuits - APP sensor - ECM	Comes on	DTC stored	ES-296
P2195	Oxygen (A/F) Sensor Signal Stuck Lean (Bank 1 Sensor 1)	- Open or short in A/F sensor (bank 1 sensor 1) circuit - A/F sensor (bank 1 sensor 1) - A/F sensor heater (bank 1 sensor 1) - A/F sensor heater relay - A/F sensor heater and relay circuits - Air induction system - Fuel pressure - Injector - ECM	Comes on	DTC stored	ES-307
P2196	Oxygen (A/F) Sensor Signal Stuck Rich (Bank 1 Sensor 1)	- Same as DTC P2195	Comes on	DTC stored	ES-307

DTC No.	Detection Item	Trouble Areas	MIL	Memory	See page
P2197	Oxygen (A/F) Sensor Signal Stuck Lean (Bank 2 Sensor 1)	- Open or short in A/F sensor (bank 2 sensor 1) circuit - A/F sensor (bank 2 sensor 1) - A/F sensor heater (bank 2 sensor 1) - A/F sensor heater relay - A/F sensor heater and relay circuits - Air induction system - Fuel pressure - Injector - ECM	Comes on	DTC stored	ES-307
P2198	Oxygen (A/F) Sensor Signal Stuck Rich (Bank 2 Sensor 1)	- Same as DTC P2197	Comes on	DTC stored	ES-307
P2238	Oxygen (A/F) Sensor Pumping Current Circuit Low (Bank 1 Sensor 1)	- Open or short in A/F sensor (bank 1 sensor 1) circuit - A/F sensor (bank 1 sensor 1) - A/F sensor heater - A/F sensor heater relay - A/F sensor heater and relay circuits - ECM	Comes on	DTC stored	ES-324
P2239	Oxygen (A/F) Sensor Pumping Current Circuit High (Bank 1 Sensor 1)	- Same as DTC P2238	Comes on	DTC stored	ES-324
P2241	Oxygen (A/F) Sensor Pumping Current Circuit Low (Bank 2 Sensor 1)	- Open or short in A/F sensor (bank 2 sensor 1) circuit - A/F sensor (bank 2 sensor 1) - A/F sensor heater - A/F sensor heater relay - A/F sensor heater and relay circuits - ECM	Comes on	DTC stored	ES-324
P2242	Oxygen (A/F) Sensor Pumping Current Circuit High (Bank 2 Sensor 1)	- Same as DTC P2241	Comes on	DTC stored	ES-324
P2252	Oxygen (A/F) Sensor Reference Ground Circuit Low (Bank 1 Sensor 1)	- Same as DTC P2238	Comes on	DTC stored	ES-324
P2253	Oxygen (A/F) Sensor Reference Ground Circuit High (Bank 1 Sensor 1)	- Same as DTC P2238	Comes on	DTC stored	ES-324
P2255	Oxygen (A/F) Sensor Reference Ground Circuit Low (Bank 2 Sensor 1)	- Same as DTC P2241	Comes on	DTC stored	ES-324
P2256	Oxygen (A/F) Sensor Reference Ground Circuit High (Bank 2 Sensor 1)	- Same as DTC P2241	Comes on	DTC stored	ES-324
P2401	Evaporative Emission Leak Detection Pump Stuck OFF	- Canister pump module (Reference orifice, leak detection pump, vent valve) - Connector/wire harness (Canister pump module - ECM) - EVAP system hose (pipe from air inlet port to canister pump module, canister filter, fuel tank vent hose) - ECM	Comes on	DTC stored	ES-329
P2402	Evaporative Emission Leak Detection Pump Stuck ON	- Same as DTC P2401	Comes on	DTC stored	ES-329
P2419	Evaporative Emission System Switching Valve Control Circuit Low	- Canister pump module (Reference orifice, leak detection pump, vent valve) - Connector/wire harness (Canister pump module - ECM) - EVAP system hose (pipe from air inlet port to canister pump module, canister filter, fuel tank vent hose) - ECM	Comes on	DTC stored	ES-335

DTC No.	Detection Item	Trouble Areas	MIL	Memory	See page
P2420	Evaporative Emission System Switching Valve Control Circuit High	- Canister pump module (Reference orifice, leak detection pump, vent valve) - Connector/wire harness (Canister pump module - ECM) - ECM	Comes on	DTC stored	ES-335
P2610	ECM / PCM Internal Engine Off Timer Performance	- ECM	Comes on	DTC stored	ES-341
P2A00	A/F Sensor Circuit Slow Response (Bank 1 Sensor 1)	- Open or short in A/F sensor (bank 1 sensor 1) circuit - A/F sensor - A/F sensor heater - ECM	Comes on	DTC stored	ES-343
P2A03	A/F Sensor Circuit Slow Response (Bank 2 Sensor 1)	- Open or short in A/F sensor (bank 2 sensor 1) circuit - A/F sensor - A/F sensor heater - ECM	Comes on	DTC stored	ES-343

DTC	P0010	Camshaft Position "A" Actuator Circuit (Bank 1)

DTC	P0020	Camshaft Position "A" Actuator Circuit (Bank 2)

HINT:
This DTC relates to the Oil Control Valve (OCV).

DESCRIPTION

ES

This DTC is designed to detect opens or shorts in the camshaft oil control valve (OCV) circuit. If the OCV's duty-cycle is excessively high or low while the engine running, the ECM will illuminate the MIL and set the DTC.
The VVT (variable valve timing) system adjusts the intake valve timing to improve the driveability. The engine oil pressure turns the camshaft actuator to adjust the valve timing. The OCV is a solenoid valve and switches the engine oil line. The valve moves when the ECM applies the 12 volts to the solenoid. The ECM changes the energizing time to the solenoid (duty-cycle) in accordance with the camshaft position, crankshaft position,, throttle position etc.

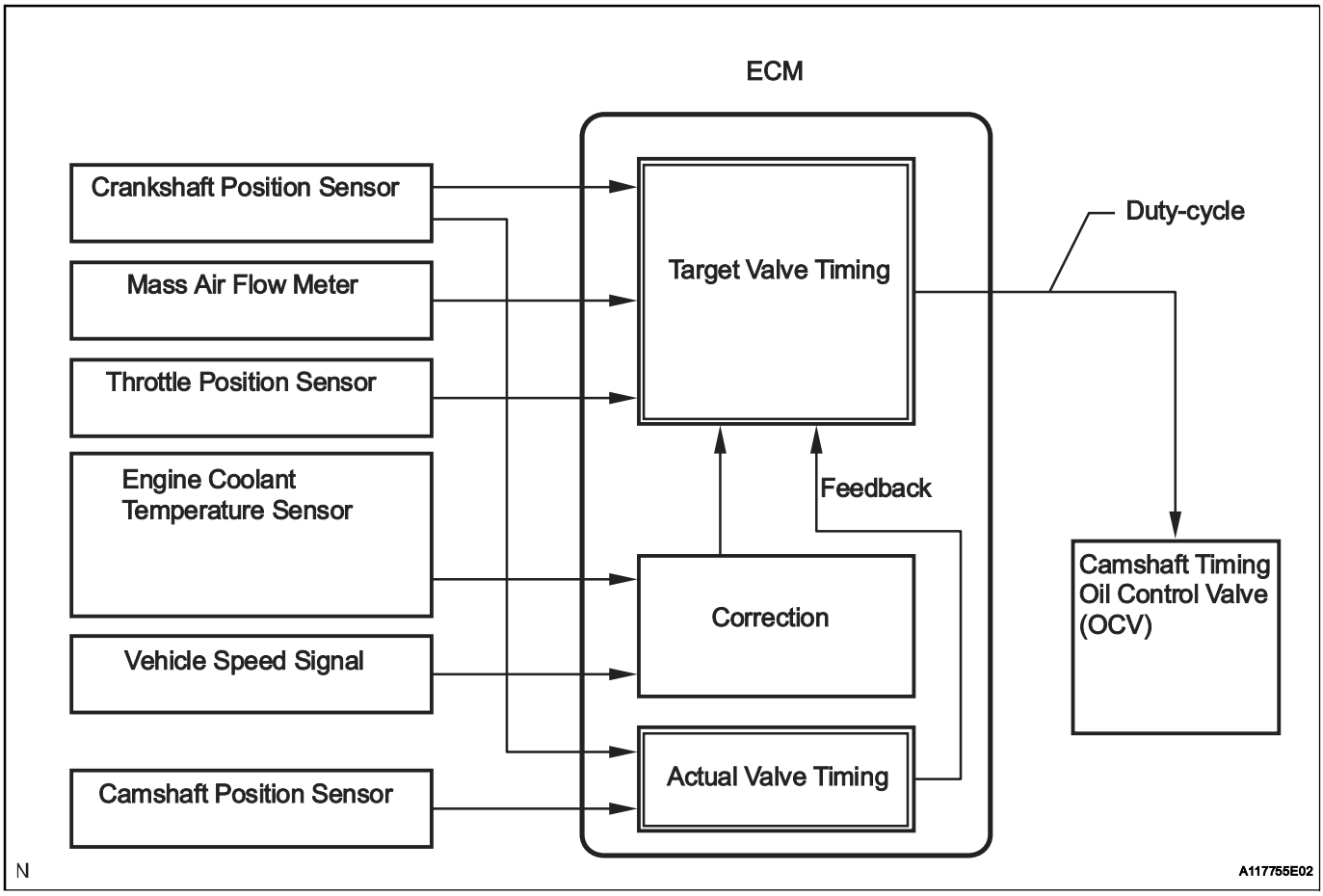

DTC No.	DTC Detection Conditions	Trouble Areas
P0010	Open or short in OCV (bank 1) circuit (1 trip detection logic)	• OCV (bank 1) circuit • OCV (bank 1) • ECM
P0020	Open or short in OCV (bank 2) circuit (1 trip detection logic)	• OCV (bank 2) circuit • OCV (bank 2) • ECM

MONITOR DESCRIPTION

This DTC is designed to detect opens or shorts in the camshaft oil control valve (OCV) circuit. If the OCV's duty-cycle is excessively high or low while the engine running, the ECM will illuminate the MIL and set the DTC.

MONITOR STRATEGY

Related DTCs	P0010: VVT OCV (bank 1) open/short P0020: VVT OCV (bank 2) open/short
Required Sensors/Components (Main)	VVT OCV (Variable Valve Timing Oil Control Valve)
Required Sensors/Components (Related)	-
Frequency of Operation	Continuous
Duration	1 second
MIL Operation	Immediate
Sequence of Operation	None

TYPICAL ENABLING CONDITIONS

Monitor runs whenever following DTCs not present	-
Engine	Running

TYPICAL MALFUNCTION THRESHOLDS

OCV duty-cycle	3% or less
	100%

COMPONENT OPERATING RANGE

OCV duty-cycle	4 to 100 % when engine running

WIRING DIAGRAM

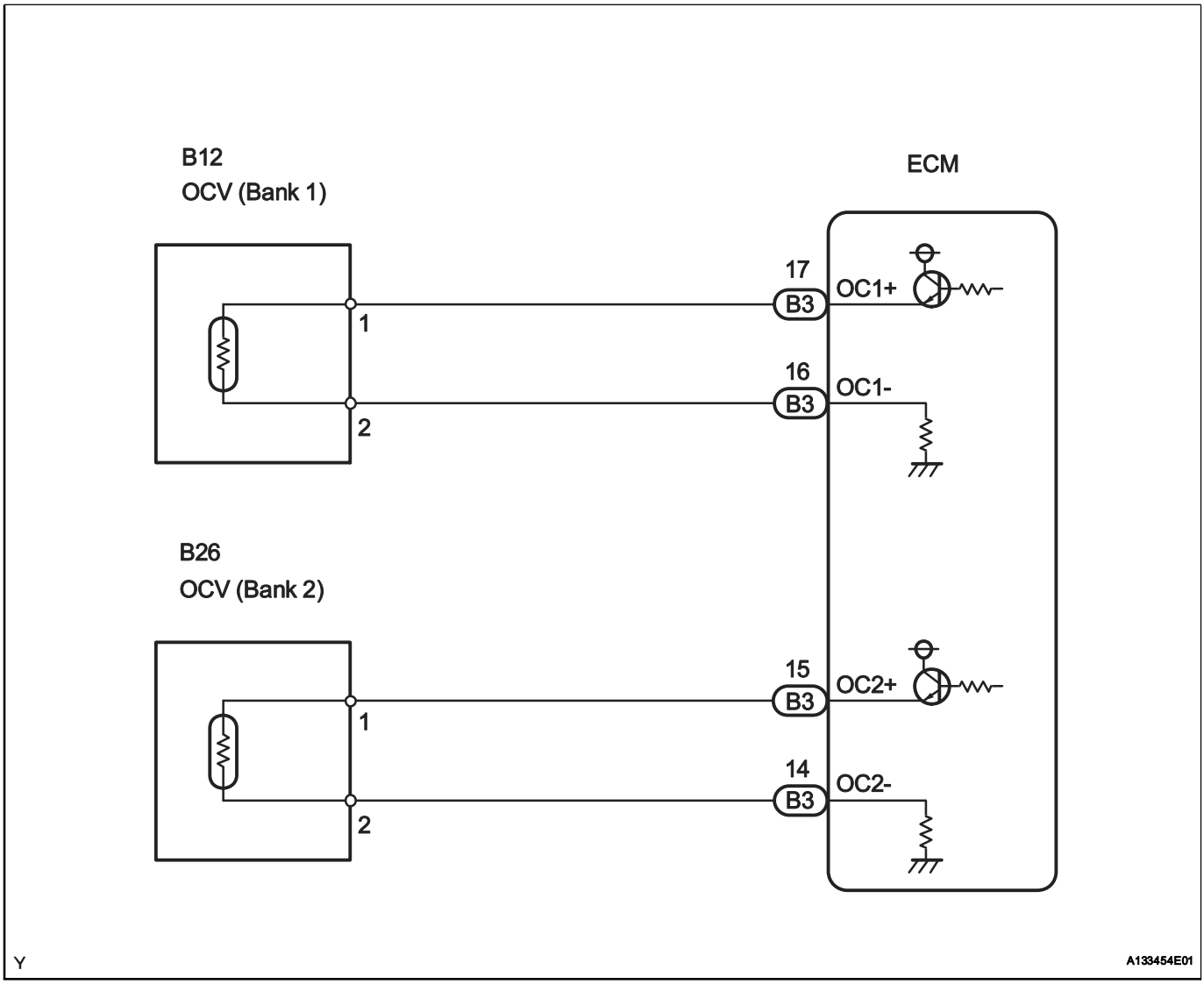

INSPECTION PROCEDURE

1	CHECK FOR DTC

(a) Clear the DTCs after recording the freeze frame data and DTCs.
(b) Allow the engine to idle and check for DTCs.
(c) Check whether P0010 or P0020 is present.

OK:

P0010 or P0020 is present.

NG → **CHECK FOR INTERMITTENT PROBLEMS**

OK

2 CHECK CAMSHAFT TIMING OIL CONTROL VALVE ASSEMBLY

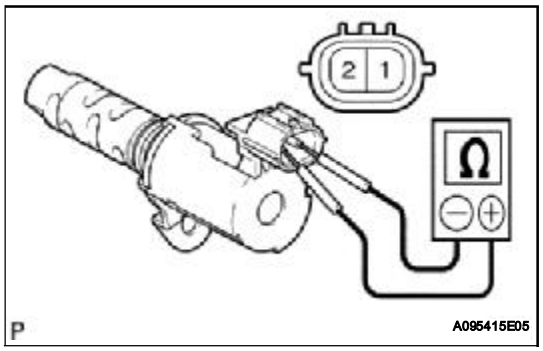

(a) Disconnect the OCV connector.
(b) Measure the resistance between the terminals of the OCV.

Standard Resistance

Tester Connections	Specified Conditions
1 - 2	6.9 to 7.9 Ω at 20°C (68°F)

(c) Reconnect the OCV connector.

NG → **REPLACE CAMSHAFT TIMING OIL CONTROL VALVE ASSEMBLY (See page ES-414)**

OK

3 CHECK HARNESS AND CONNECTOR (OCV - ECM)

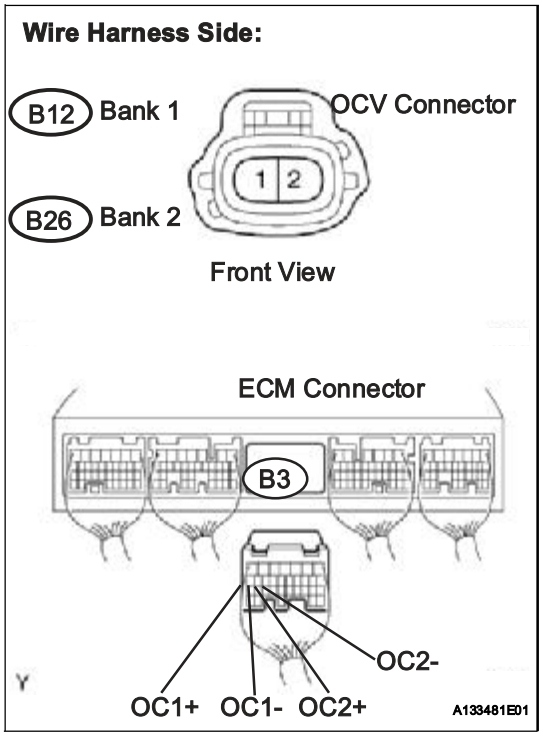

(a) Disconnect the B3 ECM connector.
(b) Disconnect the B12 or B26 OCV connector.
(c) Check the resistance.

Standard Resistance for Bank 1

Tester Connections	Specified Conditions
B12-1 - OC1+ (B3-17)	Below 1 Ω
B12-1 - Body ground	10 kΩ or higher
B12-2 - OC1- (B3-16)	Below 1 Ω
B12-2 - Body ground	10 kΩ or higher

Standard Resistance for Bank 2

Tester Connections	Specified Conditions
B26-1 - OC2+ (B3-15)	Below 1 Ω
B26-1 - Body ground	10 kΩ or higher
B26-2 - OC2- (B3-14)	Below 1 Ω
B26-2 - Body ground	10 kΩ or higher

(d) Reconnect the ECM connector.
(e) Reconnect the OCV connector.

NG → **REPAIR OR REPLACE HARNESS OR CONNECTOR**

OK

REPLACE ECM (See page ES-446)

DTC	P0011	Camshaft Position "A" - Timing Over-Advanced or System Performance (Bank 1)

DTC	P0012	Camshaft Position "A" - Timing Over-Retarded (Bank 1)

DTC	P0021	Camshaft Position "A" - Timing Over-Advanced or System Performance (Bank 2)

ES

DTC	P0022	Camshaft Position "A" - Timing Over-Retarded (Bank 2)

HINT:
If DTC P0011, P0012, P0021 or P0022 is present, check the VVT (Variable Valve Timing) system.

DESCRIPTION

Refer to DTC P0010 (See page ES-67).

DTC No.	DTC Detection Conditions	Trouble Areas
P0011 P0021	Advanced cam timing: With warm engine and engine speed of between 500 rpm and 4,000 rpm, all conditions (a), (b) and (c) met (1 trip detection logic) (a) Difference between target and actual intake valve timings more than 5°CA (Crankshaft Angle) for 4.5 seconds (b) Current intake valve timing fixed (timing changes less than 5°CA in 5 seconds) (c) Variations in VVT controller timing more than 19°CA of maximum delayed timing (malfunction in advance timing)	• Valve timing • Oil control valve (OCV) • OCV filter • Camshaft timing gear assembly • ECM
P0012 P0022	Retarded cam timing: With warm engine and engine speed of between 500 rpm and 4,000 rpm, all conditions (a), (b) and (c) met (2 trip detection logic) (a) Difference between target and actual intake valve timings more than 5°CA (Crankshaft Angle) for 4.5 seconds (b) Current intake valve timing fixed (timing changes less than 5°CA in 5 seconds) (c) Variations in VVT controller timing 19°CA or less of maximum delayed timing (malfunction in retarded timing)	

MONITOR DESCRIPTION

The ECM optimizes the intake valve timing using the VVT (Variable Valve Timing) system to control the intake camshaft. The VVT system includes the ECM, the Oil Control Valve (OCV) and the VVT controller. The ECM sends a target duty-cycle control signal to the OCV. This control signal regulates the oil pressure supplied to the VVT controller. The VVT controller can advance or retard the intake camshaft. If the difference between the target and actual intake valve timings is large, and changes in actual intake valve timing are small, the ECM interprets this as the VVT controller stuck malfunction and sets a DTC.
Example:
A DTC is set when the following conditions 1), 2) and 3) are met:
1) The difference between the target and actual intake valve timings is more than 5°CA (Crankshaft Angle) and the condition continues for more than 4.5 seconds.
2) It takes 5 seconds or more to change the valve timing by 5°CA.
3) After above conditions 1) and 2) are met, the OCV is forcibly activated 63 times or more.
DTCs P0011 and P0021 (Advanced Cam Timing) are subject to 1 trip detection logic.

DTCs P0012 and P0022 (Retarded Cam Timing) are subject to 2 trip detection logic.
These DTCs indicate that the VVT controller cannot operate properly due to OCV malfunctions or the presence of foreign objects in the OCV.
The monitor will not run unless the following conditions are met:
- The engine is warm (the engine coolant temperature is 75°C [167°F] or more).
- The vehicle has been driven at more than 40 mph (64 km/h) for 3 minutes.
- The engine has idled for 3 minutes.

MONITOR STRATEGY

Related DTCs	P0011: Advanced camshaft timing (bank 1) P0012: Retard camshaft timing (bank 1) P0021: Advanced camshaft timing (bank 2) P0022: Retard camshaft timing (bank 2)
Required Sensors/Components (Main)	VVT OCV and VVT Actuator
Required Sensors/Components (Related)	Crankshaft position sensor, Camshaft position sensor and Engine coolant temperature sensor
Frequency of Operation	Once per driving cycle
Duration	Less than 10 seconds
MIL Operation	P0011 and P0021: Immediate P0012 and P0022: 2 driving cycles
Sequence of Operation	None

TYPICAL ENABLING CONDITIONS

Monitor runs whenever following DTCs not present	P0100 - P0103 (MAF sensor) P0115 - P0118 (ECT sensor) P0125 (Insufficient ECT for closed loop) P0335 (CKP sensor) P0340 (CMP sensor) P0351 - P0356 (Igniter)
Battery voltage	11 V or more
Engine RPM	500 to 4,000 rpm
Engine coolant temperature	75 to 100°C (167 to 212°F)

TYPICAL MALFUNCTION THRESHOLDS

All of following conditions are met	-
Deactivation of actual valve timing and target valve timing	More than 5°CA (crankshaft angle)
Valve timing	No change at advanced (retarded) valve timing

If the difference between the target and actual camshaft timings is greater than the specified value, the ECM operates the VVT actuator.
Then, the ECM monitors the camshaft timing change for 5 seconds.

WIRING DIAGRAM

Refer to DTC P0010 (See page ES-69).

INSPECTION PROCEDURE

HINT:

Abnormal bank	Advanced timing over (Valve timing is out of specified range)	Retarded timing over (Valve timing is out of specified range)
Bank 1	P0011	P0012
Bank 2	P0021	P0022

- If DTC P0011 or P0012 is displayed, check the bank 1 VVT system circuit.

- Bank 1 refers to the bank that includes cylinder No. 1.
- If DTC P0021 or P0022 is displayed, check the bank 2 VVT system circuit.
- Bank 2 refers to the bank that does not include cylinder No. 1.
- Read freeze frame data using an intelligent tester. Freeze frame data record the engine condition when malfunctions are detected. When troubleshooting, freeze frame data can help determine if the vehicle was moving or stationary, if the engine was warmed up or not, if the air-fuel ratio was lean or rich, and other data, from the time the malfunction occurred.

ES

1	CHECK ANY OTHER DTCS OUTPUT (IN ADDITION TO DTC P0011, P0012, P0021 OR P0022)

(a) Connect an intelligent tester to the DLC3.
(b) Turn the ignition switch ON and turn the tester ON.
(c) Select the following menu items: DIAGNOSIS / ENHANCED OBD II / DTC INFO / CURRENT CODES.
(d) Read DTCs.

Result

Display (DTC Output)	Proceed to
P0011, P0012, P0021 or P0022	A
P0011, P0012, P0021 or P0022 and other DTCs	B

HINT:
If any DTCs other than P0011, P0012, P0021 or P0022 are output, troubleshoot those DTCs first.

B → **GO TO DTC CHART (See page ES-57)**

A

2	PERFORM ACTIVE TEST USING INTELLIGENT TESTER (OPERATE OCV)

(a) Connect an intelligent tester to the DLC3.
(b) Start the engine and turn the tester ON.
(c) Warm up the engine.
(d) Select the following menu items: DIAGNOSIS / ENHANCED OBD II / ACTIVE TEST / VVT CTRL B1.
(e) Check the engine speed while operating the Oil Control Valve (OCV) using the tester.

OK

Tester Operations	Specified Conditions
OCV OFF	Normal engine speed
OCV ON	Engine idles roughly or stalls (soon after OCV switched from OFF to ON)

NG → **Go to step 4**

OK

3	CHECK WHETHER DTC OUTPUT RECURS (DTC P0011, P0012, P0021 OR P0022)

(a) Connect an intelligent tester to the DLC3.
(b) Turn the ignition switch ON and turn the tester ON.
(c) Clear DTCs (See page ES-38).
(d) Start the engine and warm it up.

(e) Switch the ECM from normal mode to check mode using the tester (See page ES-42).
(f) Drive the vehicle for more than 10 minutes.
(g) Read DTCs using the tester.
OK:
No DTC output.

OK → **END**

NG

4 CHECK VALVE TIMING (CHECK FOR LOOSE AND JUMPED TEETH ON TIMING CHAIN)

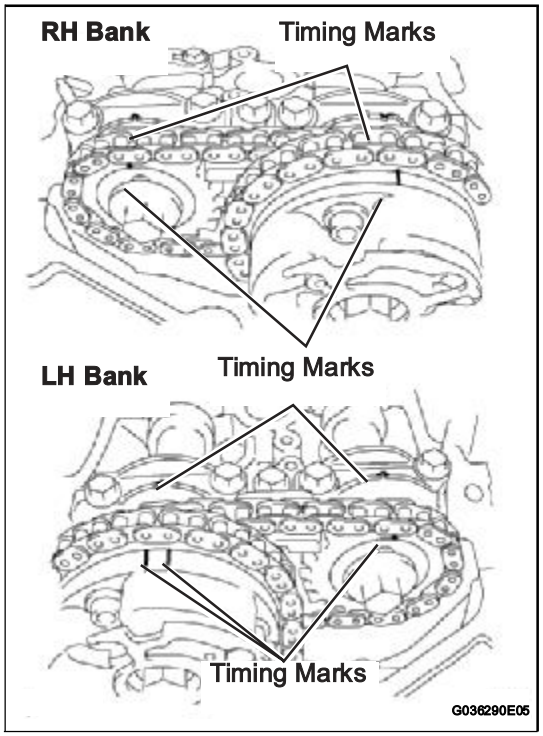

(a) Remove the cylinder head cover (See page EM-25 or EM-25).
(b) Turn the crankshaft pulley, and align its groove with the timing mark "0" of the timing chain cover.
(c) Check that the timing marks of the camshaft timing gears are aligned with the timing marks of the bearing cap as shown in the illustration.
If not, turn the crankshaft 1 revolution (360°), then align the marks as above.
OK:
Timing marks on camshaft timing gears are aligned as shown in the illustration.
(d) Reinstall the cylinder head cover (See page EM-30 or EM-30).

NG → **ADJUST VALVE TIMING**

OK

5 INSPECT CAMSHAFT TIMING OIL CONTROL VALVE ASSEMBLY (OCV)

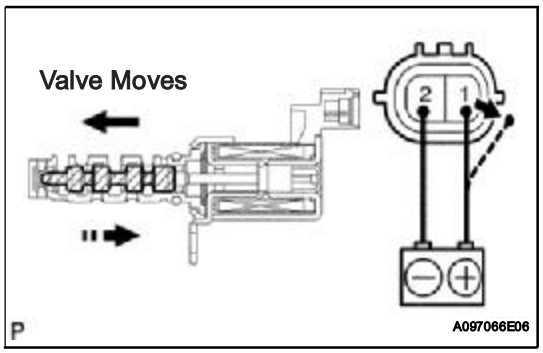

(a) Remove the OCV.
(b) Measure the resistance between the terminals of the OCV.
Standard Resistance

Tester Connections	Specified Conditions
1 - 2	6.9 to 7.9 Ω at 20°C (68°F)

(c) Apply the positive battery voltage to terminal 1 and negative battery voltage to terminal 2. Check the valve operation.
OK:
Valve moves quickly.
(d) Reinstall the OCV.

NG → **REPLACE CAMSHAFT TIMING OIL CONTROL VALVE ASSEMBLY (See page ES-414)**

OK ↓

6	INSPECT OIL CONTROL VALVE FILTER

OK:
Filter is not clogged.

NG → **CLEAN OIL CONTROL VALVE FILTER**

ES

OK ↓

7	REPLACE CAMSHAFT TIMING GEAR ASSEMBLY

NEXT ↓

8	CHECK WHETHER DTC OUTPUT RECURS

(a) Connect an intelligent tester to the DLC3.
(b) Turn the ignition switch ON and turn the tester ON.
(c) Clear DTCs (See page ES-38).
(d) Start the engine and warm it up.
(e) Switch the ECM from normal mode to check mode using the tester (See page ES-42).
(f) Drive the vehicle for more than 10 minutes.
(g) Confirm that no DTC is set using the tester.
OK:
No DTC output.
HINT:
DTC P0011, P0012, P0021 or P0022 is output when foreign objects in engine oil are caught in some parts of the system. These codes will stay registered even if the system returns to normal after a short time. These foreign objects are then captured by the oil filter, thus eliminating the source of the problem.

OK → **SYSTEM OK**

NG ↓

REPLACE ECM (See page ES-446)

DTC	P0016	Crankshaft Position - Camshaft Position Correlation (Bank 1 Sensor A)

DTC	P0018	Crankshaft Position - Camshaft Position Correlation (Bank 2 Sensor A)

DESCRIPTION

Refer to DTC P0335 (See page ES-187).

DTC No.	DTC Detection Conditions	Trouble Areas
P0016	Deviations in crankshaft and camshaft position sensor 1 signals (2 trip detection logic)	• Mechanical system (Timing chain has jumped tooth or chain stretched) • ECM
P0018	Deviations in crankshaft and camshaft position sensor 2 signals (2 trip detection logic)	

ES

MONITOR DESCRIPTION

The ECM optimizes the valve timing by using the VVT (Variable Valve Timing) system to control the intake camshaft. The VVT system includes the ECM, the Oil Control Valve (OCV) and the VVT controller.
The ECM sends a target duty-cycle control signal to the OCV. This control signal regulates the oil pressure supplied to the VVT controller. The VVT controller can advance or retard the intake camshaft.
The ECM calibrates the intake valve timing by setting the intake camshaft to the most retarded angle while the engine is idling. The ECM closes the OCV to retard the cam. The ECM stores this value as the VVT learning value. When the difference between the target and actual intake valve timings is 5°CA (Crankshaft Angle) or less, the ECM stores it.
If the VVT learning value matches the following conditions, the ECM determines the existence of a malfunction in the VVT system, and sets the DTC.

- VVT learning value: Less than 22.5°CA, or more than 45.2°CA.
- Above condition continues for 18 seconds or more.

This DTC indicates that the intake camshaft has been installed toward the crankshaft at an incorrect angle, caused by factors such as the timing chain having jumped a tooth.
This monitor begins to run after the engine has idled for 5 minutes.

MONITOR STRATEGY

Related DTCs	P0016: Camshaft Timing Misalignment at idling
Required Sensors/Components (Main)	VVT actuator
Required Sensors/Components (Related)	Camshaft position sensor, Crankshaft position sensor
Frequency of Operation	Once per driving cycle
Duration	Less than 1 minute
MIL Operation	2 driving cycles
Sequence of Operation	None

TYPICAL ENABLING CONDITIONS

Monitor runs whenever following DTCs not present	P0011 (VVT system 1 - advance) P0012 (VVT system 1 - retard) P0021 (VVT system 2 - advance) P0022 (VVT system 2 - retard) P0115 - P0118 (ECT sensor)
Engine RPM	500 to 1,000 rpm

TYPICAL MALFUNCTION THRESHOLDS

One of following conditions is met	-
VVT learning value at maximum retarded valve timing (Bank 1)	Less than 22.5 °CA (crankshaft angle)
VVT learning value at maximum retarded valve timing (Bank 2)	Less than 22.5 °CA (crankshaft angle)
VVT learning value at maximum retarded valve timing (Bank 1)	More than 45.2 °CA (crankshaft angle)
VVT learning value at maximum retarded valve timing (Bank 2)	More than 45.2 °CA (crankshaft angle)

WIRING DIAGRAM

Refer to DTC P0335 (See page ES-189).
Refer to DTC P0340 (See page ES-195).

ES

INSPECTION PROCEDURE

HINT:
Read freeze frame data using an intelligent tester. Freeze frame data record the engine condition when malfunctions are detected. When troubleshooting, freeze frame data can help determine if the vehicle was moving or stationary, if the engine was warmed up or not, if the air-fuel ratio was lean or rich, and other data, from the time the malfunction occurred.

1	**CHECK VALVE TIMING (CHECK FOR LOOSE AND A JUMPED TOOTH OF TIMING CHAIN) (See page ES-79)**

NG → **ADJUST VALVE TIMING (REPAIR OR REPLACE TIMING CHAIN)**

OK ↓

REPLACE ECM (See page ES-446)

DTC	**P0031**	**Oxygen (A/F) Sensor Heater Control Circuit Low (Bank 1 Sensor 1)**

DTC	**P0032**	**Oxygen (A/F) Sensor Heater Control Circuit High (Bank 1 Sensor 1)**

DTC	**P0051**	**Oxygen (A/F) Sensor Heater Control Circuit Low (Bank 2 Sensor 1)**

DTC	**P0052**	**Oxygen (A/F) Sensor Heater Control Circuit High (Bank 2 Sensor 1)**

ES

HINT:
- Although the DTC titles say the oxygen sensor, these DTCs relate to the Air-Fuel Ratio (A/F) sensor.
- Sensor 1 refers to the sensor mounted in front of the Three-Way Catalytic Converter (TWC) and located near the engine assembly.

DESCRIPTION

Refer to DTC P2195 (See page ES-307).

HINT:
- When any of these DTCs are set, the ECM enters fail-safe mode. The ECM turns off the A/F sensor heater in fail-safe mode. Fail-safe mode continues until the ignition switch is turned OFF.
- The ECM provides a pulse width modulated control circuit to adjust the current through the heater. The A/F sensor heater circuit uses a relay on the +B side of the circuit.

Reference (System Diagram of Bank 1 Sensor 1):

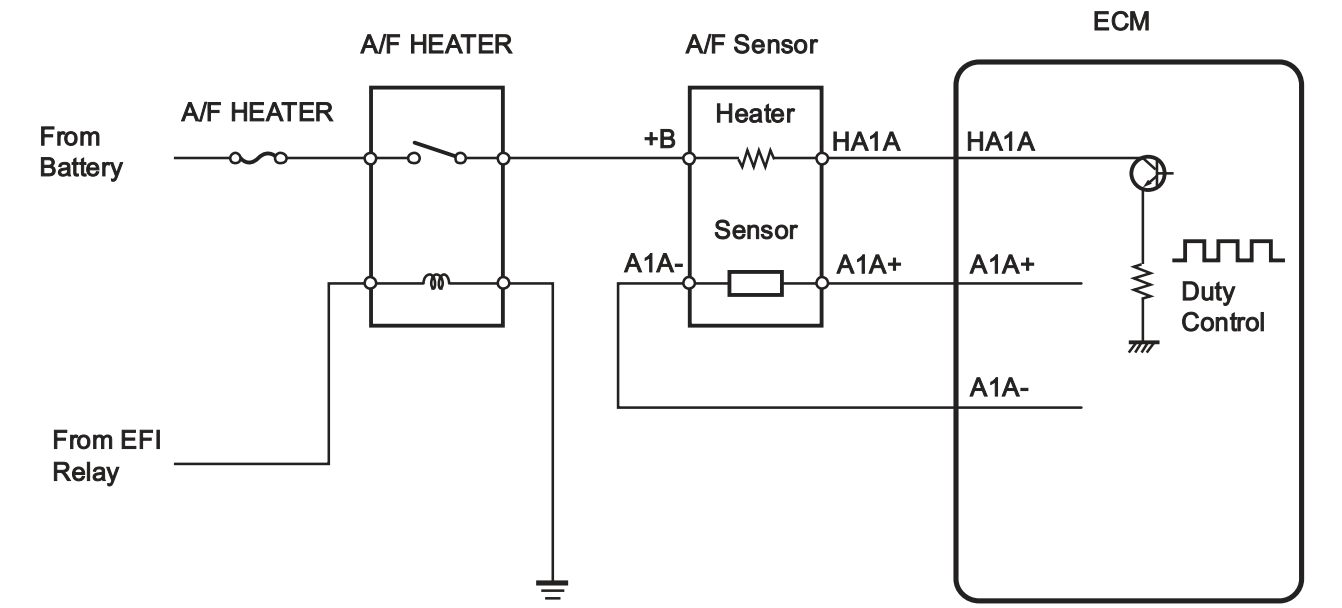

DTC No.	DTC Detection Conditions	Trouble Areas
P0031 P0051	Air-Fuel Ratio (A/F) sensor heater current less than 0.8 A (1 trip detection logic)	• Open in A/F sensor heater circuit • A/F sensor heater • A/F sensor heater relay • ECM

DTC No.	DTC Detection Conditions	Trouble Areas
P0032 P0052	Air-Fuel Ratio (A/F) sensor heater current more than 10 A (1 trip detection logic)	• Short in A/F sensor heater circuit • A/F sensor heater • A/F sensor heater relay • ECM

HINT:
- Bank 1 refers to the bank that includes cylinder No. 1.
- Bank 2 refers to the bank that does not include cylinder No. 1.
- Sensor 1 refers to the sensor closest to the engine assembly.
- Sensor 2 refers to the sensor farthest away from the engine assembly.

MONITOR DESCRIPTION

ES

The ECM uses information from the Air-Fuel Ratio (A/F) sensor to regulate the air-fuel ratio and keep it close to the stoichiometric level. This maximizes the ability of the Three-Way Catalytic Converter (TWC) to purify the exhaust gases.
The A/F sensor detects oxygen levels in the exhaust gas and transmits the information to the ECM. The inner surface of the sensor element is exposed to the outside air. The outer surface of the sensor element is exposed to the exhaust gas. The sensor element is made of platinum coated zirconia and includes an integrated heating element.
The zirconia element generates a small voltage when there is a large difference in the oxygen concentrations between the exhaust gas and outside air. The platinum coating amplifies this voltage generation.
The A/F sensor is more efficient when heated. When the exhaust gas temperature is low, the sensor cannot generate useful voltage signals without supplementary heating. The ECM regulates the supplementary heating using a duty-cycle approach to adjust the average current in the sensor heater element. If the heater current is outside the normal range, the signal transmitted by the A/F sensor will be inaccurate, as a result, the ECM will be unable to regulate air-fuel ratio properly.
When the current in the A/F sensor heater is outside the normal operating range, the ECM interprets this as a malfunction in the sensor heater and sets a DTC.
Example:
The ECM sets DTC P0032 or P0052 when the current in the A/F sensor heater is more than 10 A. Conversely, when the heater current is less than 0.8 A, DTC P0031 or P0051 is set.

MONITOR STRATEGY

Related DTCs	P0031: A/F sensor heater (bank 1) open/short (Low electrical current) P0032: A/F sensor heater (bank 1) open/short (High electrical current) P0051: A/F sensor heater (bank 2) open/short (Low electrical current) P0052: A/F sensor heater (bank 2) open/short (High electrical current)
Required Sensors/Components (Main)	A/F sensor heater (bank 1 and 2)
Required Sensors/Components (Related)	-
Frequency of Operation	Continuous
Duration	10 seconds
MIL Operation	Immediate
Sequence of Operation	None

TYPICAL ENABLING CONDITIONS

All:

Monitor runs whenever following DTCs not present	None

P0031 and P0051:

Battery voltage	10.5 V or more
A/F sensor heater duty-cycle ratio	50 % or more
Time after engine start	10 seconds or more

P0032 and P0052:

Time after engine start	10 seconds or more

TYPICAL MALFUNCTION THRESHOLDS

P0031 and P0051:

A/F sensor heater current	Less than 0.8 A

P0032 and P0052:

A/F sensor heater current	More than 10 A

COMPONENT OPERATING RANGE

A/F sensor heater resistance	1.8 to 3.4 Ω at 20°C (68°F)

ES

WIRING DIAGRAM

Refer to DTC P2195 (See page ES-312).

INSPECTION PROCEDURE

HINT:

Read freeze frame data using an intelligent tester. Freeze frame data record the engine condition when malfunctions are detected. When troubleshooting, freeze frame data can help determine if the vehicle was moving or stationary, if the engine was warmed up or not, if the air-fuel ratio was lean or rich, and other data, from the time the malfunction occurred.

1	INSPECT AIR FUEL RATIO SENSOR (HEATER RESISTANCE)

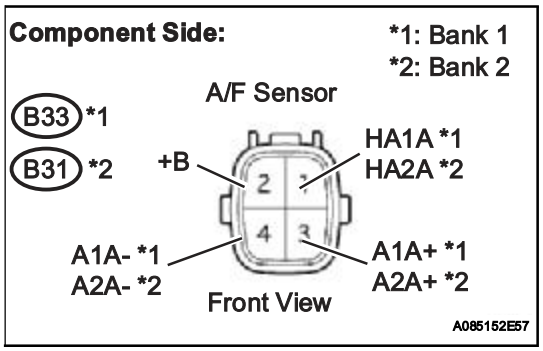

(a) Disconnect the B33*1 or B31*2 A/F sensor connector.
HINT:
- *1: Bank 1 Sensor 1
- *2: Bank 2 Sensor 1

(b) Measure the resistance between the terminals of the A/F sensor connector.

Standard Resistance (Bank 1 Sensor 1)

Tester Connections	Specified Conditions
HA1A (1) - +B (2)	1.8 to 3.4 Ω at 20°C (68°F)
HA1A (1) - A1A- (4)	10 kΩ or higher

Standard Resistance (Bank 2 Sensor 1)

Tester Connections	Specified Conditions
HA2A (1) - +B (2)	1.8 to 3.4 Ω at 20°C (68°F)
HA2A (1) - A2A- (4)	10 kΩ or higher

(c) Reconnect the A/F sensor connector.

NG → **REPLACE AIR FUEL RATIO SENSOR (See page EC-21)**

OK

2 INSPECT AIR FUEL RATIO SENSOR HEATER RELAY

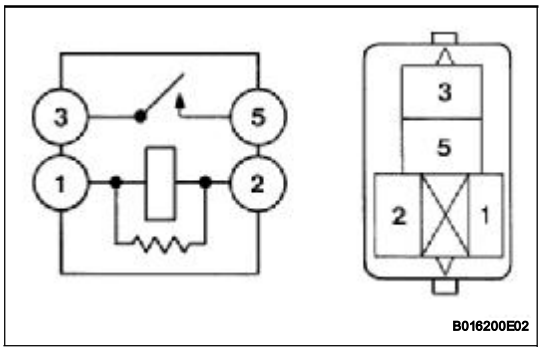

(a) Remove the A/F sensor heater relay from the engine room relay block.

(b) Check the A/F sensor heater relay resistance.

Standard Resistance

Tester Connections	Specified Conditions
3 - 5	10 kΩ or higher
	Below 1 Ω (when battery voltage applied to terminals 1 and 2)

(c) Reinstall the A/F sensor heater relay.

NG → **REPLACE AIR FUEL RATIO SENSOR HEATER RELAY**

OK

3 INSPECT ECM (HA1A OR HA2A VOLTAGE)

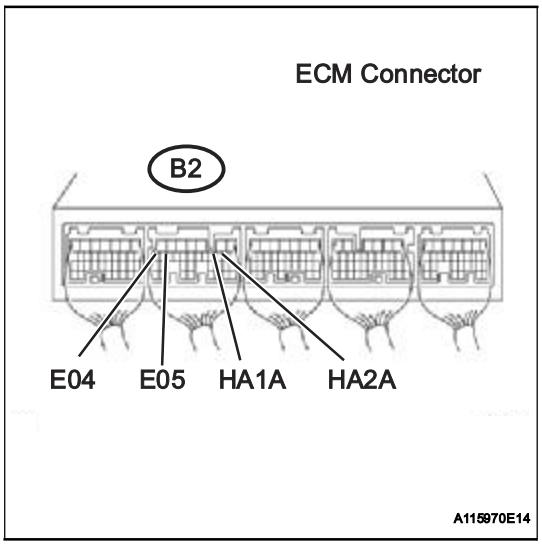

(a) Turn the ignition switch ON.

(b) Measure the voltage between the terminals of the B2 ECM connector.

Standard Voltage

Tester Connections	Specified Conditions
HA1A (B2-2) - E04 (B2-7)	11 to 14 V
HA2A (B2-1) - E05 (B2-6)	

HINT:

- The HA1A means the A/F sensor bank 1 sensor 1.
- The HA2A means the A/F sensor bank 2 sensor 1.

OK → **REPLACE ECM (See page ES-446)**

NG

4	CHECK HARNESS AND CONNECTOR (A/F SENSOR - ECM, A/F SENSOR - A/F SENSOR HEATER RELAY)

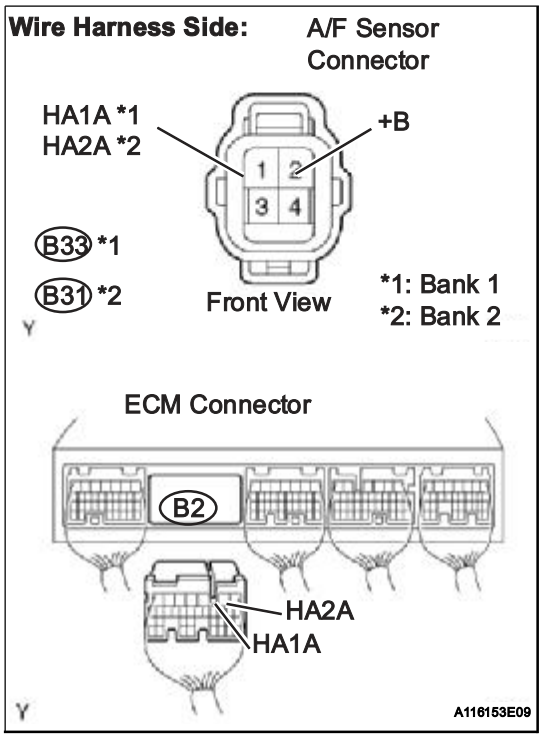

(a) Check the harness and the connector between the ECM and the A/F sensor.
  (1) Disconnect the B33*1 or B31*2 A/F sensor connector.
  HINT:
  - *1: Bank 1 Sensor 1
  - *2: Bank 2 Sensor 1
  (2) Disconnect the B2 ECM connector.
  (3) Check the resistance.

Standard Resistance (Check for open)

Tester Connections	Specified Conditions
HA1A (B33-1) - HA1A (B2-2)	Below 1 Ω
HA2A (B31-1) - HA2A (B2-1)	

Standard Resistance (Check for short)

Tester Connections	Specified Conditions
HA1A (B33-1) or HA1A (B2-2) - Body ground	10 kΩ or higher
HA2A (B31-1) or HA2A (B2-1) - Body ground	

  (4) Reconnect the A/F sensor connector.
  (5) Reconnect the ECM connector.

(b) Check the harness and the connector between the A/F sensor and A/F sensor heater relay.
  (1) Disconnect the B33*1 or B31*2 A/F sensor connector.
  (2) Remove the A/F sensor heater relay from the engine room relay block.
  (3) Check the resistance.

Standard Resistance (Check for open)

Tester Connections	Specified Conditions
+B (B33-2) - A/F sensor heater relay (3)	Below 1 Ω
+B (B31-2) - A/F sensor heater relay (3)	

Standard Resistance (Check for short)

Tester Connections	Specified Conditions
+B (B33-2) or A/F sensor heater relay (3) - Body ground	10 kΩ or higher
+B (B31-2) or A/F sensor heater relay (3) - Body ground	

  (4) Reconnect the A/F sensor connector.
  (5) Reinstall the A/F sensor heater relay.

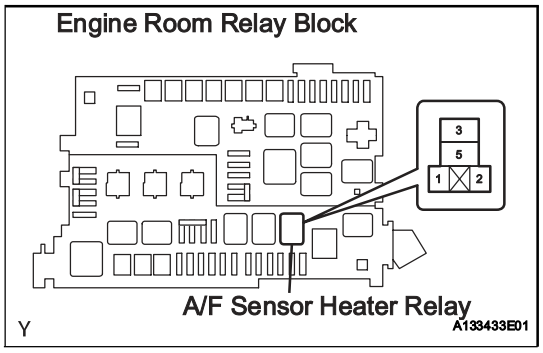

NG → **REPAIR OR REPLACE HARNESS OR CONNECTOR**

OK

REPLACE ECM (See page ES-446)

DTC	P0037	Oxygen Sensor Heater Control Circuit Low (Bank 1 Sensor 2)
DTC	P0038	Oxygen Sensor Heater Control Circuit High (Bank 1 Sensor 2)
DTC	P0057	Oxygen Sensor Heater Control Circuit Low (Bank 2 Sensor 2)
DTC	P0058	Oxygen Sensor Heater Control Circuit High (Bank 2 Sensor 2)
DTC	P0141	Oxygen Sensor Heater Circuit Malfunction (Bank 1 Sensor 2)
DTC	P0161	Oxygen Sensor Heater Circuit Malfunction (Bank 2 Sensor 2)

HINT:
Sensor 2 refers to the sensor mounted behind the Three-Way Catalytic Converter (TWC) and located far from the engine assembly.

DESCRIPTION

Refer to DTC P0136 (See page ES-133).
HINT:

- When any of these DTCs are set, the ECM enters fail-safe mode. The ECM turns off the Heated Oxygen (HO2) Sensor heater in fail-safe mode. Fail-safe mode continues until the engine switch is turned off.

- The ECM provides a pulse width modulated control circuit to adjust the current through the heater. The HO2 sensor heater circuit uses a relay on the +B side of the circuit.

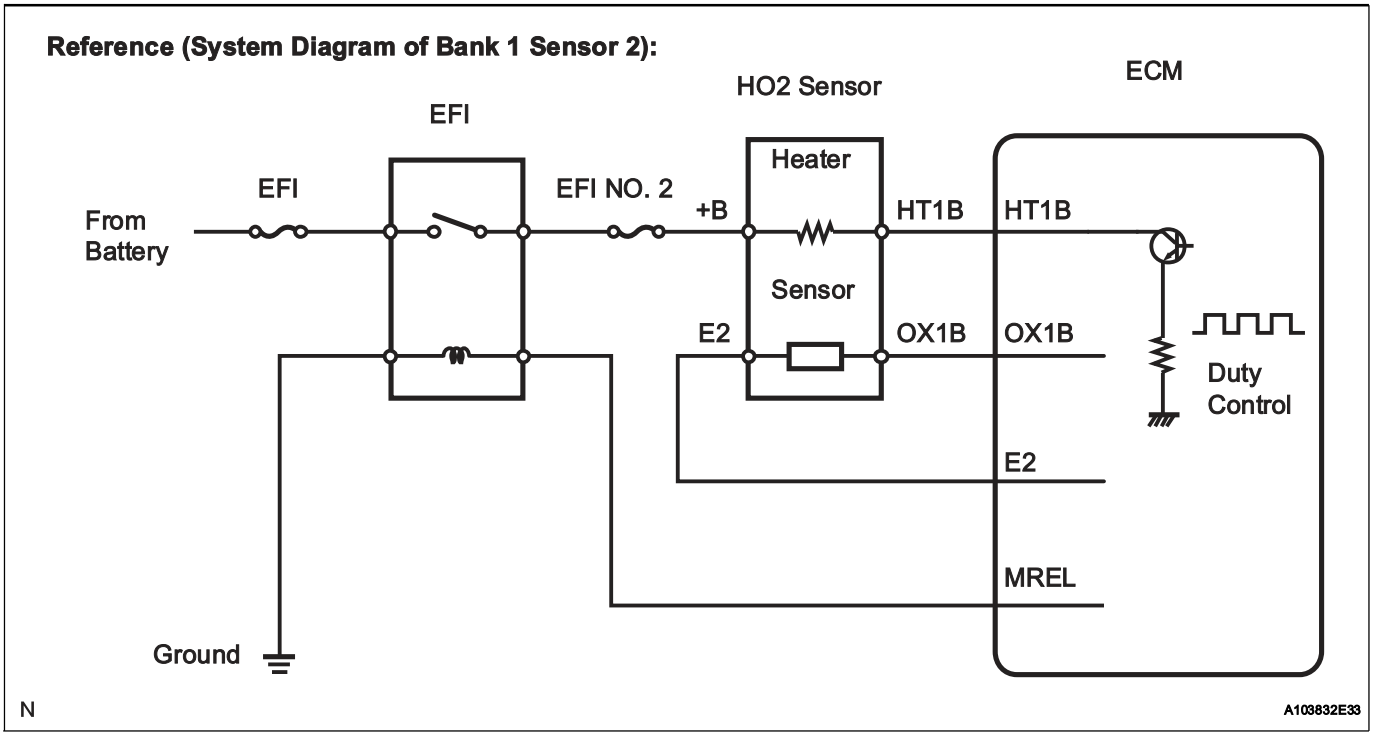

DTC No.	DTC Detection Conditions	Trouble Areas
P0037 P0057	Heated Oxygen (HO2) sensor heater current less than 0.3 A (1 trip detection logic)	• Open in HO2 sensor heater circuit • HO2 sensor heater • EFI relay • ECM
P0038 P0058	Heated Oxygen (HO2) sensor heater current more than 2 A (1 trip detection logic)	• Short in HO2 sensor heater circuit • HO2 sensor heater • EFI relay • ECM
P0141 P0161	Cumulative heater resistance correction value exceeds the acceptable threshold. (2 trip detection logic)	• Open or short in HO2 sensor heater circuit • HO2 sensor heater • EFI relay • ECM

HINT:
- Bank 1 refers to the bank that includes cylinder No. 1.
- Bank 2 refers to the bank that does not include cylinder No. 1.
- Sensor 1 refers to the sensor closest to the engine assembly.
- Sensor 2 refers to the sensor farthest away from the engine assembly.

MONITOR DESCRIPTION

The sensing position of the Heated Oxygen (HO2) sensor has a zirconia element which is used to detect the oxygen concentration in the exhaust gas. If the zirconia element is at the appropriate temperature, and the difference between the oxygen concentrations surrounding the inside and outside surfaces of the sensor is large, the zirconia element generates voltage signals. In order to increase the oxygen concentration detecting capacity of the zirconia element, the ECM supplements the heat from the exhaust with heat from a heating element inside the sensor.

Heated oxygen sensor heater range check (P0037, P0038, P0057 and P0058):

The ECM monitors the current applied to the O2 sensor heater to check the heater for malfunctions. If the current is below the threshold value, the ECM will determine that there is an open circuit in the heater. If the current is above the threshold value, the ECM will determine that there is a short circuit in the heater.

Example:

The ECM sets DTC P0038 or P0058 when the current in the HO2 sensor heater is more than 2 A. Conversely, when the heater current is less than 0.3 A, DTC P0037 or P0057 is set.

Heated oxygen sensor heater performance (P0141 and P0161):

After the accumulated heater ON time exceeds 100 seconds, the ECM calculates the heater resistance using the battery voltage and the current applied to the heater. If the resistance is above the threshold value, the ECM will determine that there is a malfunction in the HO2S heater and set DTC P0141 and P0161.

MONITOR STRATEGY

Related DTCs	P0037: Heated oxygen sensor heater (bank 1 sensor 2) open/short (Low electrical current) P0038: Heated oxygen sensor heater (bank 1 sensor 2) open/short (High electrical current) P0057: Heated oxygen sensor heater (bank 2 sensor 2) open/short (Low electrical current) P0058: Heated oxygen sensor heater (bank 2 sensor 2) open/short (High electrical current) P0141: Heated oxygen sensor heater performance (bank 1 sensor 2) P0161: Heated oxygen sensor heater performance (bank 2 sensor 2)
Required sensors / components (Main)	Heated oxygen sensor heater (bank 1 sensor 2) Heated oxygen sensor heater (bank 2 sensor 2)
Required sensors / components (Sub)	-
Frequency of operation	Continuous: P0037, P0038, P0057, P0058 Once per driving cycle: P0141, P0161
Duration	0.5 seconds: P0037, P0057 Within 1 second: P0038, P0058 10 seconds: P0141 and P0161
MIL operation	Immediate: P0037, P0038, P0057 and P0058 2 driving cycles: P0141 and P0161
Sequence of operation	None

TYPICAL ENABLING CONDITIONS

All:

Monitor runs whenever following DTCs are not present	None

P0037 and P0057:

Battery voltage	10.5 to 20 V

P0038 and P0058 (Case 1):

Battery voltage	10.5 V or more
Engine	Running
Starter	OFF

P0038 and P0058 (Case 2):

Battery voltage	10.5 to 20 V

P0141 and P0161:

One of the following conditions is met:	Condition A or B
A. All of the following conditions are met:	Condition 1, 2, 3, 4 and 5
1. Battery voltage	10.5 V or more
2. Fuel cut	OFF
3. Time after fuel cut ON to OFF	30 seconds or more
4. Accumulated heater ON time	100 seconds or more
5. Learned heater OFF current operation	Completed
B. Duration that rear heated oxygen sensor impedance is less than 15 kΩ	2 seconds or more

TYPICAL MALFUNCTION THRESHOLDS

P0037 and P0057:

Heater current	Less than 0.3 A

P0038 and P0058:

One of the following conditions is met:	Condition A or B
A. Learned heater OFF current	More than 2 A
B. Heater current	2 A or more

P0141 and P0161 (Heater performance monitor check):

Accumulated heater resistance	Varies with sensor element temperature (Example: More than 23 ohm)

ES

COMPONENT OPERATING RANGE

Heated Oxygen (HO2) sensor heater current	0.4 to 1 A (when engine idles, HO2 sensor warmed up and battery voltage 11 to 14 V)

MONITOR RESULT

Refer to CHECKING MONITOR STATUS (See page ES-20).

WIRING DIAGRAM

Refer to DTC P0136 (See page ES-140).

INSPECTION PROCEDURE

HINT:

Read freeze frame data using an intelligent tester. The ECM records vehicle and driving condition information as freeze frame data the moment a DTC is stored. When troubleshooting, freeze frame data can be helpful in determining whether the vehicle was running or stopped, whether the engine was warmed up or not, whether the air/fuel ratio was lean or rich, as well as other data recorded at the time of a malfunction.

1	INSPECT HEATED OXYGEN SENSOR (HEATER RESISTANCE)

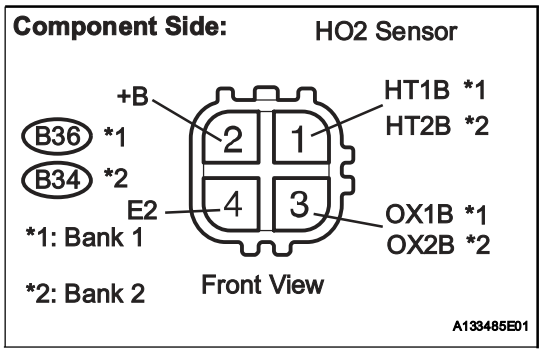

(a) Disconnect the B36*1 or B34*2 Heated Oxygen (HO2) sensor connectors.

HINT:

- *1: Bank 1 Sensor 2
- *2: Bank 2 Sensor 2

(b) Measure the resistance between the terminals of the HO2 sensor connector.

Standard Resistance (Bank 1 Sensor 2)

Tester Connections	Specified Conditions
HT1B (1) - +B (2)	11 to 16 Ω at 20°C (68°F)
HT1B (1) - E2 (4)	10 kΩ or higher

Standard Resistance (Bank 2 Sensor 2)

Tester Connections	Specified Conditions
HT2B (1) - +B (2)	11 to 16 Ω at 20°C (68°F)
HT2B (1) - E2 (4)	10 kΩ or higher

(c) Reconnect the HO2 sensor connector.

NG → **REPLACE HEATED OXYGEN SENSOR (See page EC-24)**

OK

2 INSPECT EFI RELAY

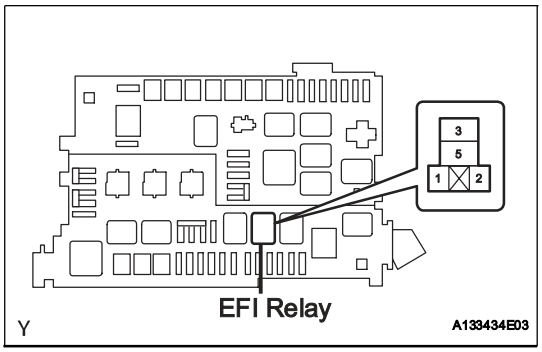

(a) Remove the EFI relay from the engine room relay block.
(b) Check the EFI relay resistance.
Standard Resistance

Terminal Connections	Specified Conditions
3 - 5	10 kΩ or higher
	Below 1 Ω (when battery voltage applied to terminals 1 and 2)

(c) Reinstall the EFI relay.

NG → **REPLACE EFI RELAY**

OK

3 INSPECT ECM (HT1B OR HT2B VOLTAGE)

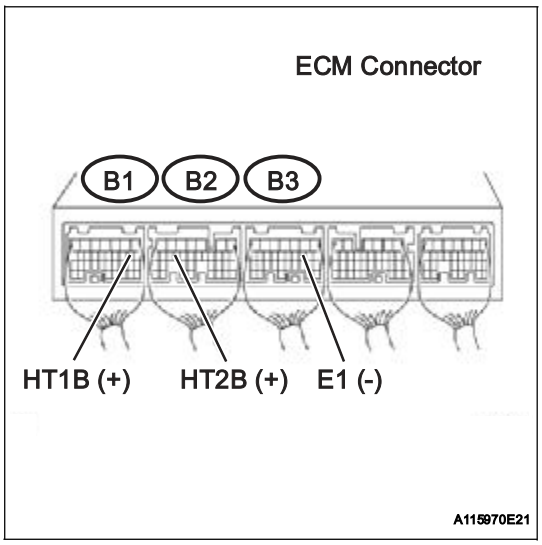

(a) Turn the ignition switch ON.
(b) Measure the voltage between the terminals of the ECM connectors.
Standard Resistance

Terminal Connections	Specified Conditions
HT1B (B1-1) - E1 (B3-1)	11 to 14 V
HT2B (B2-5) - E1 (B3-1)	

HINT:
- The HT1B means the heated oxygen sensor bank 1 sensor 2.
- The HT2B means the heated oxygen sensor bank 2 sensor 2.

OK → **REPLACE ECM (See page ES-446)**

NG

4	CHECK HARNESS AND CONNECTOR (HEATED OXYGEN SENSOR - EFI NO. 2 FUSE)

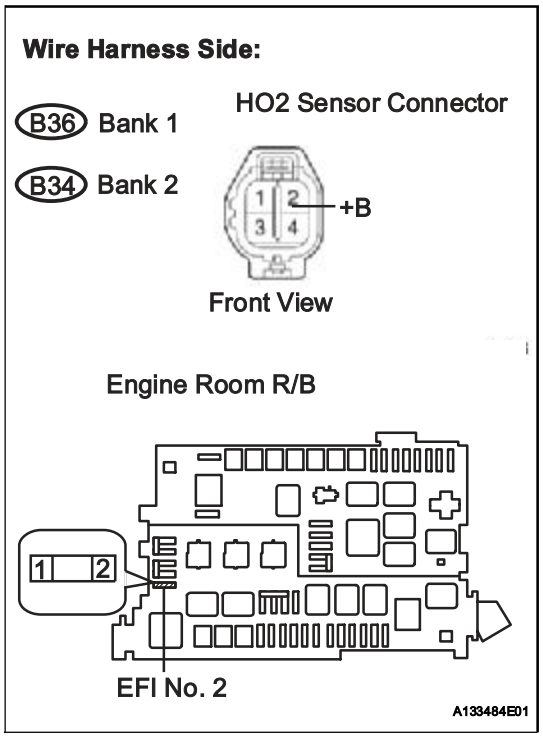

(a) Check the harness and connector between the HO2 sensor and EFI No. 2 fuse.
   (1) Disconnect the B36*1 or B34*2 HO2 sensor connector.
   HINT:
   - *1: Bank 1 Sensor 2
   - *2: Bank 2 Sensor 2
   (2) Remove the EFI No. 2 fuse from the engine room R/B.
   (3) Check the resistance.

Standard Resistance

Terminal Connections	Specified Conditions
+B (B36-2) - EFI No. 2 fuse (2)	Below 1 Ω
+B (B34-2) - EFI No. 2 fuse (2)	

Standard Resistance

Terminal Connections	Specified Conditions
+B (B36-2) or EFI No. 2 fuse (2) - Body ground	10 kΩ or higher
+B (B34-2) or EFI No. 2 fuse (2) - Body ground	

   (4) Reconnect the HO2 sensor connector.
   (5) Reconnect the EFI No. 2 fuse.

NG → **REPAIR OR REPLACE HARNESS OR CONNECTOR**

OK

5	CHECK HARNESS AND CONNECTOR (HEATED OXYGEN SENSOR - ECM)

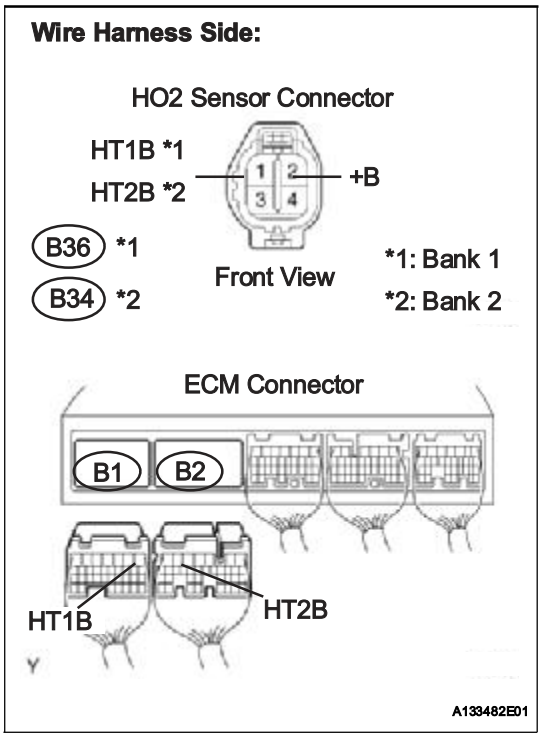

(a) Check the harness and connector between the ECM and HO2 sensor.
   (1) Disconnect the B36*1 or B34*2 HO2 sensor connector.
   HINT:
   - *1: Bank 1 Sensor 2
   - *2: Bank 2 Sensor 2
   (2) Remove the B1 and B2 ECM connector.
   (3) Check the resistance.

Standard Resistance

Terminal Connections	Specified Conditions
HT1B (B36-1) - HT1B (B1-1)	Below 1 Ω
HT2B (B34-1) - HT2B (B2-5)	

Standard Resistance

Terminal Connections	Specified Conditions
HT1B (B36-1) or HT1B (B1-1) - Body ground	10 kΩ or higher
HT2B (B34-1) or HT2B (B2-5) - Body ground	

   (4) Reconnect the HO2 sensor connector.
   (5) Reconnect the ECM connector.

NG → **REPAIR OR REPLACE HARNESS OR CONNECTOR**

OK

REPLACE ECM (See page ES-446)

DTC	P0100	Mass or Volume Air Flow Circuit

DTC	P0102	Mass or Volume Air Flow Circuit Low Input

DTC	P0103	Mass or Volume Air Flow Circuit High Input

DESCRIPTION

The Mass Air Flow (MAF) meter is a sensor that measures the amount of air flowing through the throttle valve.
The ECM uses this information to determine the fuel injection time and to provide appropriate air-fuel ratio.
Inside the MAF meter, there is a heated platinum wire which is exposed to the flow of intake air.
By applying a specific electrical current to the wire, the ECM heats it to a given temperature. The flow of incoming air cools both the wire and an internal thermistor, affecting their resistance. To maintain a constant current value, the ECM varies the voltage applied to these components in the MAF meter. The voltage level is proportional to the airflow through the sensor, and the ECM uses it to calculate the intake air volume.
The circuit is constructed so that the platinum hot wire and the temperature sensor provide a bridge circuit, and the power transistor is controlled so that the potentials of A and B remain equal to maintain the predetermined temperature.
HINT:
When any of these DTCs are set, the ECM enters fail-safe mode. During fail-safe mode, the ignition timing is calculated by the ECM, according to the engine RPM and throttle valve position. Fail-safe mode continues until a pass condition is detected.

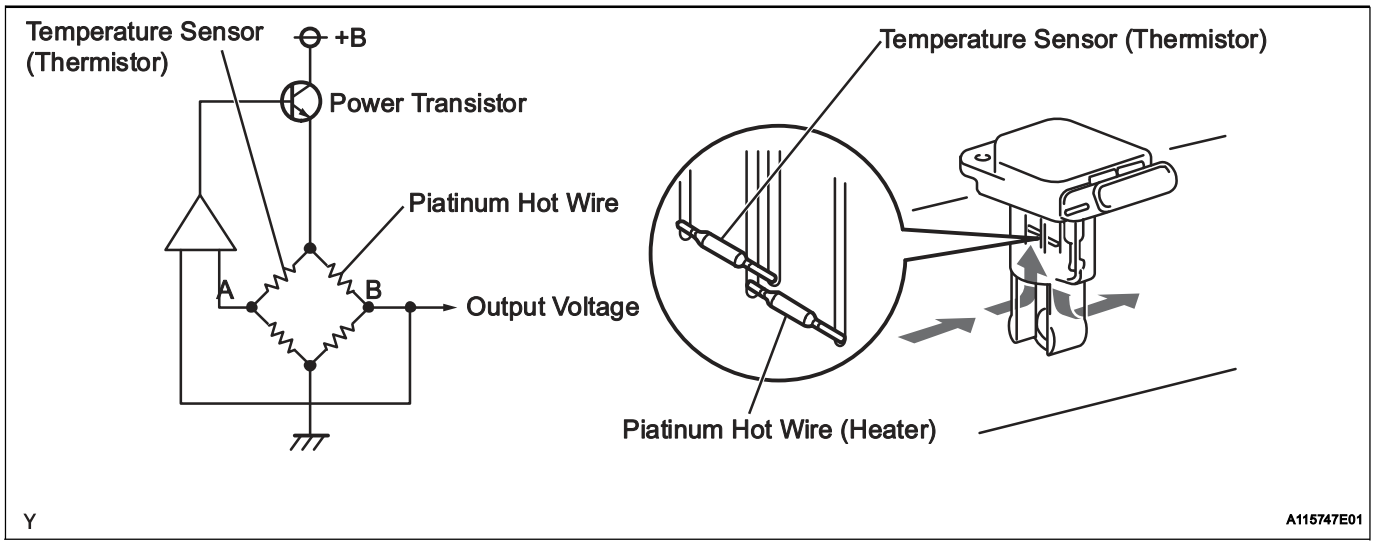

DTC No.	DTC Detection Conditions	Trouble Areas
P0100	Open or short in Mass Air Flow (MAF) meter circuit for 3 seconds (1 trip detection logic)	• Open or short in MAF meter circuit • MAF meter • ECM
P0102	Open in Mass Air Flow (MAF) meter circuit for 3 seconds (1 trip detection logic)	• Open in MAF meter circuit • Short in ground circuit • MAF meter • ECM
P0103	Short in Mass Air Flow (MAF) meter circuit for 3 seconds (1 trip detection logic)	• Short in MAF meter circuit (+B circuit) • MAF meter • ECM

HINT:
When any of these DTCs are set, check the air-flow rate by selecting the following menu items on an intelligent tester: DIAGNOSIS / ENHANCED OBD II / DATA LIST / PRIMARY / MAF.

Mass Air Flow Rate (g/sec)	Malfunctions
Approximately 0.0	• Open in Mass Air Flow (MAF) meter power source circuit • Open or short in VG circuit
271.0 or more	• Open in EVG circuit

MONITOR DESCRIPTION

If there is a defect in the MAF meter or an open or short circuit, the voltage level deviates from the normal operating range. The ECM interprets this deviation as a malfunction in the MAF meter and sets a DTC.
Example:
When the sensor voltage output remains less than 0.2 V, or more than 4.9 V, for more than 3 seconds, the ECM sets a DTC.
If the malfunction is not repaired successfully, a DTC is set 3 seconds after the engine is next started.

ES

MONITOR STRATEGY

Related DTCs	P0100: Mass air flow meter range check (Fluctuating) P0102: Mass air flow meter range check (Low voltage) P0103: Mass air flow meter range check (High voltage)
Required Sensors/Components (Main)	MAF meter
Required Sensors/Components (Related)	Crankshaft position sensor
Frequency of Operation	Continuous
Duration	3 seconds
MIL Operation	Immediate: Engine RPM less than 4,000 rpm 2 driving cycles: Engine RPM 4,000 rpm or more
Sequence of Operation	None

TYPICAL ENABLING CONDITIONS

Monitor runs whenever following DTCs not present	None

TYPICAL MALFUNCTION THRESHOLDS

P0100:

Mass air flow meter voltage	Less than 0.2 V or more than 4.9 V

P0102:

Mass air flow meter voltage	Less than 0.2 V

P0103:

Mass air flow meter voltage	More than 4.9 V

COMPONENT OPERATING RANGE

Mass air flow meter voltage	Between 0.2 V and 4.9 V

WIRING DIAGRAM

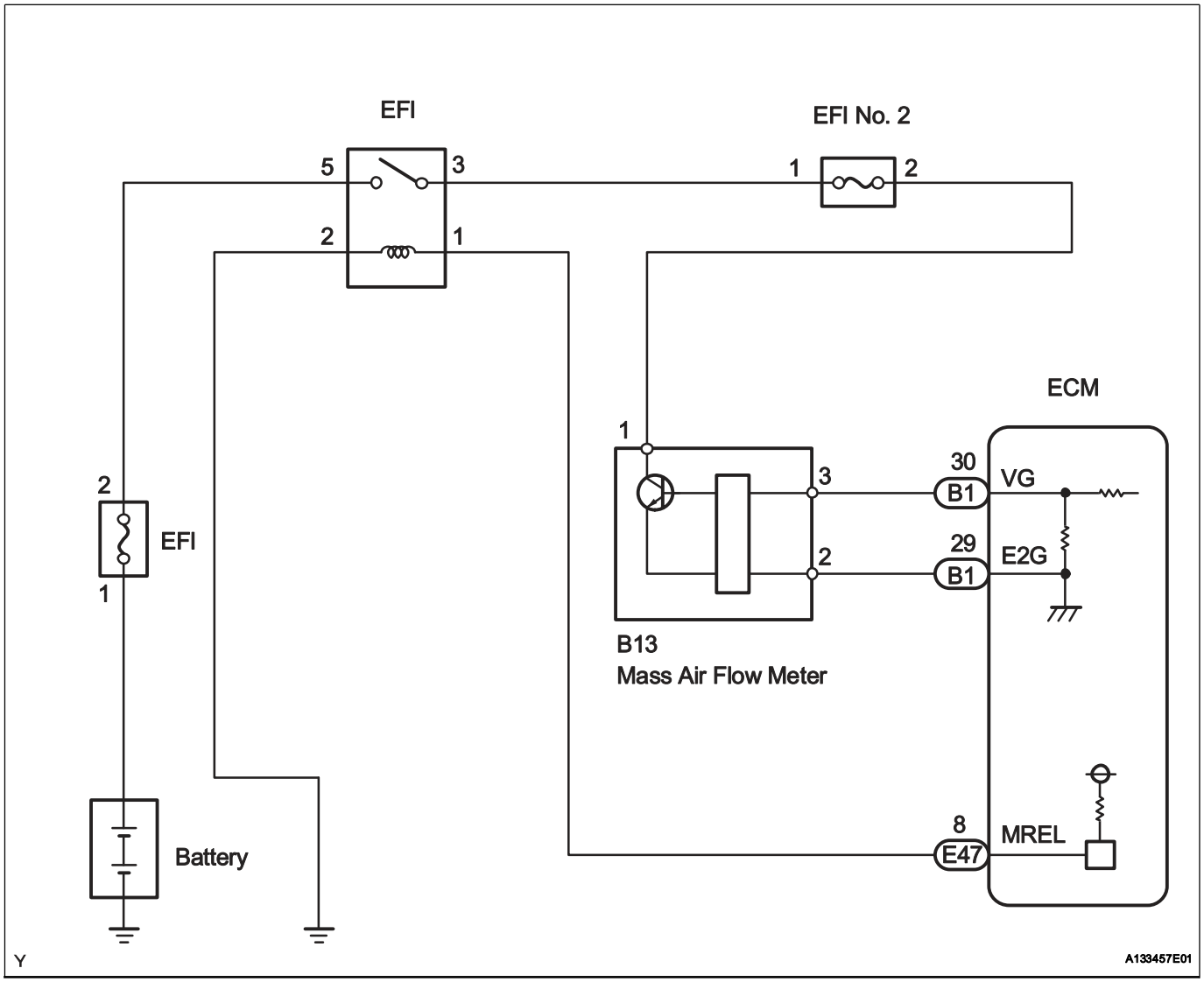

INSPECTION PROCEDURE

HINT:

Read freeze frame data using an intelligent tester. Freeze frame data record the engine condition when malfunctions are detected. When troubleshooting, freeze frame data can help determine if the vehicle was moving or stationary, if the engine was warmed up or not, if the air-fuel ratio was lean or rich, and other data, from the time the malfunction occurred.

1	READ VALUE USING INTELLIGENT TESTER (MASS AIR FLOW RATE)

(a) Connect an intelligent tester to the DLC3.
(b) Start the engine.
(c) Turn the tester ON.
(d) Select the following menu items: DIAGNOSIS / ENHANCED OBD II / DATA LIST / PRIMARY / MAF.
(e) Read the values displayed on the tester.

Result

Mass Air Flow Rate (g/sec)	Proceed to
0.0	A

Mass Air Flow Rate (g/sec)	Proceed to
271.0 or more	B
Between 1.0 and 270.0 (*1)	C

*1: The value must be changed when the throttle valve is open or closed.

B → Go to step 6

C → CHECK FOR INTERMITTENT PROBLEMS

A

ES

2 INSPECT MASS AIR FLOW METER (POWER SOURCE VOLTAGE)

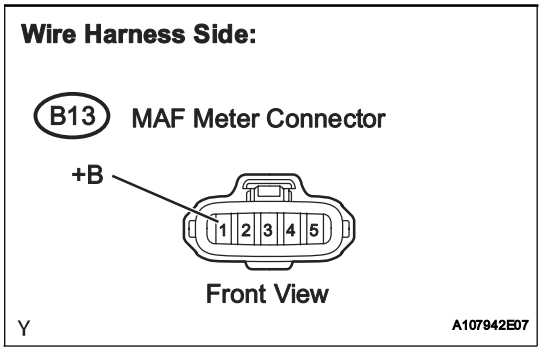

(a) Disconnect the B13 Mass Air Flow (MAF) meter connector.
(b) Turn the ignition switch ON.
(c) Measure the voltage between the terminal of the wire harness side connector and body ground.
Standard Voltage

Tester Connections	Specified Conditions
+B (B13-1) - Body ground	11 to 14 V

(d) Reconnect the MAF meter connector.

NG → Go to step 5

OK

3 INSPECT ECM (VG VOLTAGE)

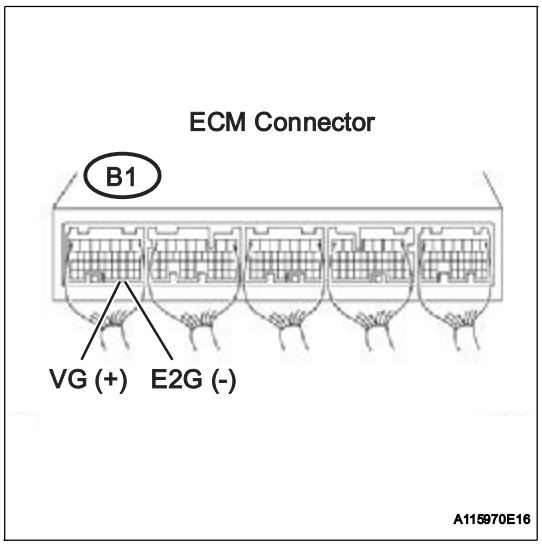

(a) Start the engine.
(b) Measure the voltage between the terminals of the B1 ECM connector.
HINT:
The transmission gear selector lever should be in the P or N position and the A/C switch should be turned OFF.
Standard Voltage

Tester Connections	Conditions	Specified Conditions
VG (B1-30) - E2G (B1-29)	Engine idling	0.5 to 3.0 V

OK → REPLACE ECM (See page ES-446)

NG

4	CHECK HARNESS AND CONNECTOR (MASS AIR FLOW METER - ECM)

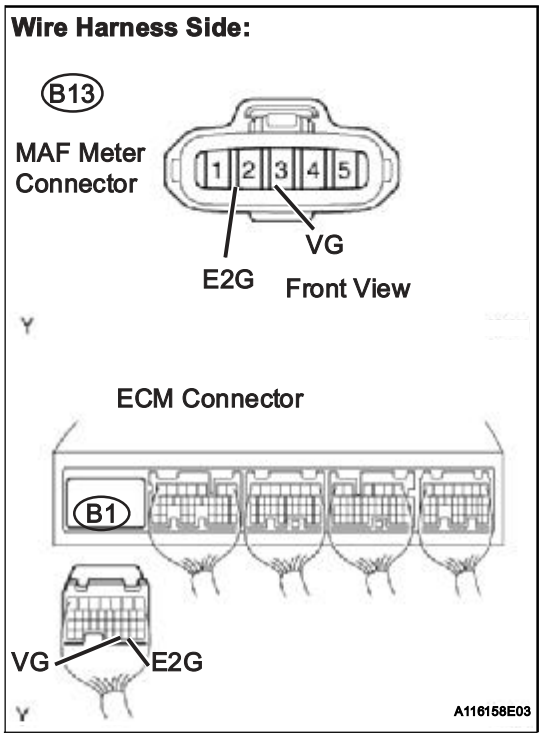

(a) Disconnect the B13 MAF meter connector.
(b) Disconnect the B1 ECM connector.
(c) Check the resistance.

Standard Resistance (Check for open)

Tester Connections	Specified Conditions
VG (B13-3) - VG (B1-30)	Below 1 Ω
E2G (B13-2) - E2G (B1-29)	

Standard Resistance (Check for short)

Tester Connections	Specified Conditions
VG (B13-3) or VG (B1-30) - Body ground	10 kΩ or higher

(d) Reconnect the MAF meter connector.
(e) Reconnect the ECM connector.

NG → **REPAIR OR REPLACE HARNESS OR CONNECTOR**

OK

REPLACE MASS AIR FLOW METER (See page ES-409)

ES

5	CHECK HARNESS AND CONNECTOR (MASS AIR FLOW METER - EFI RELAY)

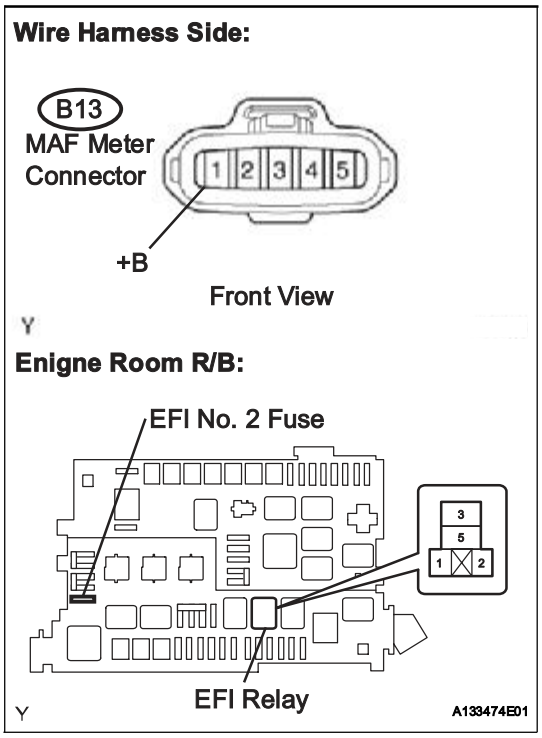

(a) Inspect the EFI NO. 2 fuse.
  (1) Remove the EFI NO. 2 fuse from the engine room relay block.
  (2) Check the EFI NO. 2 fuse resistance.
  Standard Resistance:
  Below 1 Ω
  (3) Reinstall the EFI NO. 2 fuse.
(b) Disconnect the B13 MAF meter connector.
(c) Remove the EFI relay from the engine room relay block.
(d) Check the resistance.
Standard Resistance (Check for open)

Tester Connections	Specified Conditions
+B (B13-1) - EFI relay (3)	Below 1 Ω

Standard Resistance (Check for short)

Tester Connections	Specified Conditions
+B (B13-1) or EFI relay (3) - Body ground	10 kΩ or higher

(e) Reconnect the MAF meter connector.
(f) Reinstall the EFI relay.

NG → **REPAIR OR REPLACE HARNESS OR CONNECTOR**

OK

CHECK ECM POWER SOURCE CIRCUIT

6	INSPECT ECM (SENSOR GROUND)

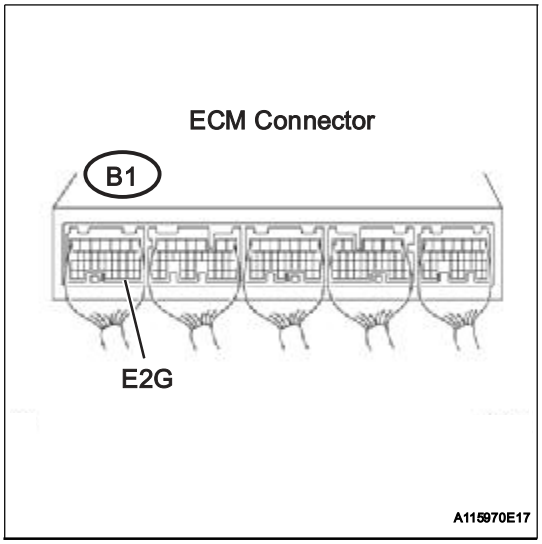

(a) Check the resistance.
Standard Resistance

Tester Connections	Specified Conditions
E2G (B1-29) - Body ground	Below 1 Ω

NG → **REPLACE ECM (See page ES-446)**

OK

7	CHECK HARNESS AND CONNECTOR (MASS AIR FLOW METER - ECM)

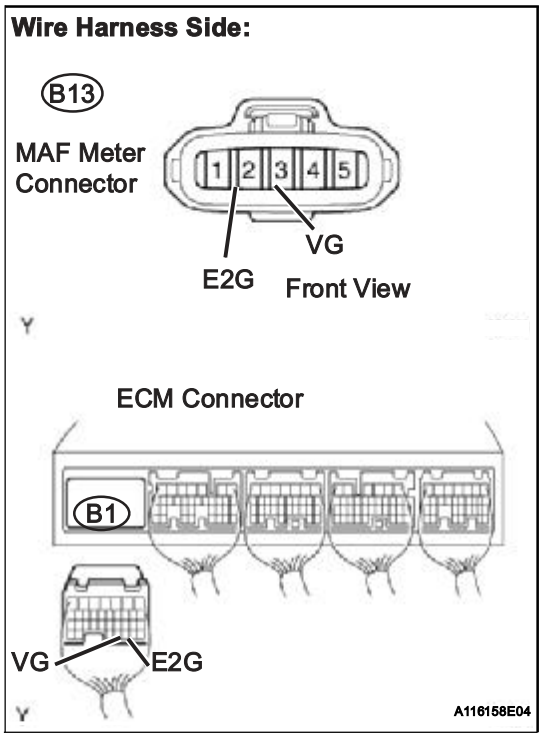

(a) Disconnect the B13 MAF meter connector.
(b) Disconnect the B1 ECM connector.
(c) Check the resistance.

Standard Resistance (Check for open)

Tester Connections	Specified Conditions
VG (B13-3) - VG (B1-30)	Below 1 Ω
E2G (B13-2) - E2G (B1-29)	

Standard Resistance (Check for short)

Tester Connections	Specified Conditions
VG (B13-3) or VG (B1-30) - Body ground	10 kΩ or higher

(d) Reconnect the MAF meter connector.
(e) Reconnect the ECM connector.

NG → **REPAIR OR REPLACE HARNESS OR CONNECTOR**

OK

REPLACE MASS AIR FLOW METER (See page ES-409)

ES

DTC	P0101	Mass Air Flow Circuit Range / Performance Problem

DESCRIPTION

Refer to DTC P0100 (See page ES-90).

DTC No.	DTC Detection Conditions	Trouble Areas
P0101	Conditions (a), (b), (c), (d) and (e) are met (2 trip detection logic): (a) Engine running (b) Engine coolant temperature 70°C (158°F) or higher (c) Throttle Position (TP) sensor voltage 0.4 V or more (d) Average engine load value ratio less than 0.85, or more than 1.17 (varies with estimated engine load) Average engine load value ratio = Average engine load based on MAF meter output / Average engine load estimated from driving conditions (e) Average air-fuel ratio less than -20 %, or more than 20 %	• Mass Air Flow (MAF) meter • Air induction system • PCV hose connections

ES

MONITOR DESCRIPTION

The MAF meter is a sensor that measures the amount of air flowing through the throttle valve. The ECM uses this information to determine the fuel injection time and to provide an appropriate air-fuel ratio. Inside the MAF meter, there is a heated platinum wire which is exposed to the flow of intake air. By applying a specific electrical current to the wire, the ECM heats it to a specific temperature. The flow of incoming air cools both the wire and an internal thermistor, affecting their resistance. To maintain a constant current value, the ECM varies the voltage applied to these components of the MAF meter. The voltage level is proportional to the airflow through the sensor, and the ECM uses it to calculate the intake air volume.
The ECM monitors the average engine load value ratio to check the MAF meter for malfunctions. The average engine load value ratio is obtained by comparing the average engine load calculated from the MAF meter output to the average engine load estimated from the driving conditions, such as the engine speed and the throttle opening angle. If the average engine load value ratio is below the threshold value, the ECM determines that the intake air volume is low, and if the average engine load value ratio is above the threshold value, the ECM determines that the intake air volume is high.
If this is detected in 2 consecutive driving cycles, the MIL is illuminated and a DTC is set.

MONITOR STRATEGY

Related DTCs	P0101: Mass air flow meter rationality
Required Sensors/Components (Main)	Mass air flow meter
Required Sensors/Components (Related)	Crankshaft Position (CKP) sensor, Engine Coolant Temperature (ECT) sensor and Throttle Position (TP) sensor
Frequency of Operation	Continuous
Duration	20 seconds or more
MIL Operation	2 driving cycles
Sequence of Operation	None

TYPICAL ENABLING CONDITIONS

Monitor runs whenever following DTCs not present	P0115 - P0118 (ECT sensor) P0120 - P0223, P2135 (TP sensor) P0125 (Insufficient ECT for closed loop) P0335 (CKP sensor) P0340 (CMP sensor)
Throttle position (TP sensor voltage)	0.4 V or more
Engine	Running
Battery voltage	10.5 V or more

Engine coolant temperature	70°C (158°F) or more
IAT sensor circuit	OK
ECT sensor circuit	OK
CKP sensor circuit	OK
TP sensor circuit	OK
Canister pressure sensor circuit	OK
EVAP leak detection pump	OK
EVAP vent valve	OK

TYPICAL MALFUNCTION THRESHOLDS

Both of following conditions 1 and 2 met	-
1. Averaged engine load value ratio	Less than 0.85, or more than 1.17 (varies with estimated engine load)
2. Averaged air-fuel ratio	Less than -20 %, or more than 20 %

ES

WIRING DIAGRAM

Refer to DTC P0100 (See page ES-92).

CONFIRMATION DRIVING PATTERN

HINT:

Performing this confirmation pattern will activate the mass air flow performance monitor.

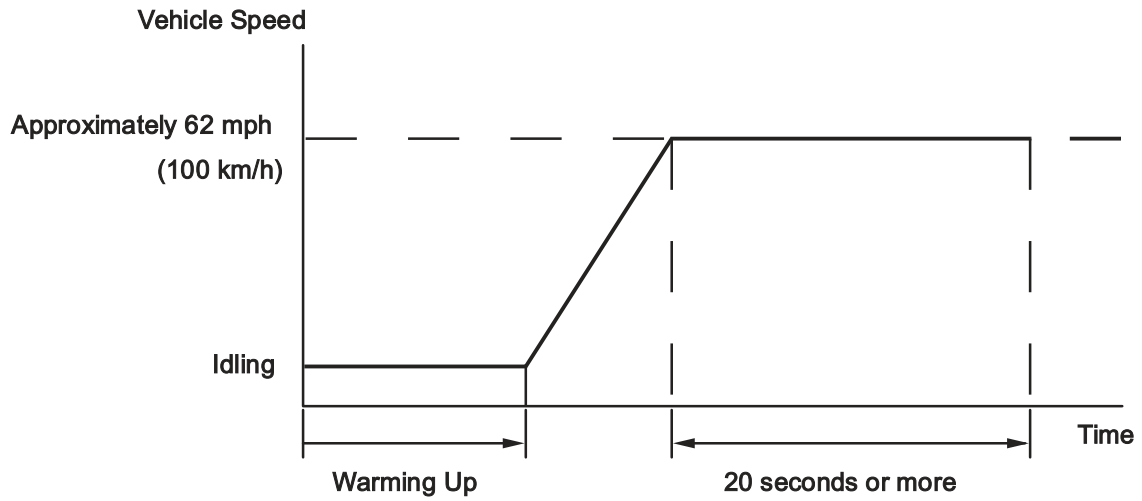

1. Connect the intelligent tester to the DLC3.
2. Turn the ignition switch to ON.
3. Turn the tester ON.
4. Clear DTCs (See page ES-38).
5. Start the engine, and warm it up until the engine coolant temperature reaches 70°C (158°F) or higher.
6. Drive the vehicle at approximately 62 mph (100 km/h) for 20 seconds or more.
7. On the tester, select the following menu items: DIAGNOSIS / ENHANCED OBD II / DTC INFO / PENDING CODES and check if any DTCs (any pending DTCs) are set.

INSPECTION PROCEDURE

HINT:
Read freeze frame data using an intelligent tester. Freeze frame data record the engine condition when malfunctions are detected. When troubleshooting, freeze frame data can help determine if the vehicle was moving or stationary, if the engine was warmed up or not, if the air-fuel ratio was lean or rich, and other data, from the time the malfunction occurred.

ES

1 CHECK ANY OTHER DTCS OUTPUT (IN ADDITION TO DTC P0101)

(a) Connect an intelligent tester to the DLC3.
(b) Turn the ignition switch to ON.
(c) Turn the tester ON.
(d) Select the following menu items: DIAGNOSIS / ENHANCED OBD II / DTC INFO / CURRENT CODES.
(e) Read DTCs.

Result

Display (DTC Output)	Proceed To
P0101	A
P0101 and other DTCs	B

HINT:
If any DTCs other than P0101 are output, troubleshoot those DTCs first.

B → **GO TO DTC CHART**

A

2 CHECK AIR INDUCTION SYSTEM

(a) Check the air induction system for vacuum leakage.
OK:
No leakage from air induction system.

NG → **REPAIR OR REPLACE AIR INDUCTION SYSTEM**

OK

3 CHECK PCV HOSE CONNECTIONS

OK:
PCV hose is connected correctly and is not damaged.

NG → **REPAIR OR REPLACE PCV HOSE**

OK

REPLACE MASS AIR FLOW METER (See page ES-409)

DTC	P0110	Intake Air Temperature Circuit

DTC	P0112	Intake Air Temperature Circuit Low Input

DTC	P0113	Intake Air Temperature Circuit High Input

DESCRIPTION

(Figure 1)

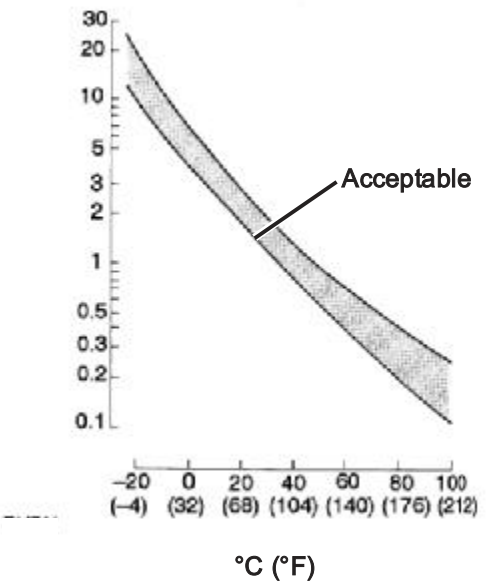

The Intake Air Temperature (IAT) sensor, mounted on the Mass Air Flow (MAF) meter, monitors the IAT. The IAT sensor has a built in thermistor with a resistance that varies according to the temperature of the intake air. When the IAT is low, the resistance of the thermistor increases. When the temperature is high, the resistance drops. These variations in resistance are transmitted to the ECM as voltage changes (see Fig. 1).

The IAT sensor is powered by a 5 V supply from the THA terminal of the ECM, via resistor R.

Resistor R and the IAT sensor are connected in series. When the resistance value of the IAT sensor changes, according to changes in the IAT, the voltage at terminal THA also varies.

Based on this signal, the ECM increases the fuel injection volume when the engine is cold to improve driveability.

HINT:

When any of DTCs P0110, P0112 and P0113 are set, the ECM enters fail-safe mode. During fail-safe mode, the IAT is estimated to be 20°C (68°F) by the ECM. Fail-safe mode continues until a pass condition is detected.

DTC No.	Proceed To	DTC Detection Conditions	Trouble Areas
P0110	Step 1	Open or short in Intake Air Temperature (IAT) sensor circuit for 0.5 seconds (1 trip detection logic)	• Open or short in IAT sensor circuit • IAT sensor (built into MAF meter) • ECM
P0112	Step 4	Short in Intake Air Temperature (IAT) sensor circuit for 0.5 seconds (1 trip detection logic)	• Short in IAT sensor circuit • IAT sensor (built into MAF meter) • ECM
P0113	Step 2	Open in Intake Air Temperature (IAT) sensor circuit for 0.5 seconds (1 trip detection logic)	• Open in IAT sensor circuit • IAT sensor (built into MAF meter) • ECM

HINT:
When any of these DTCs are set, check the IAT by selecting the following menu items on an intelligent tester: DIAGNOSIS / ENHANCED OBD II / DATA LIST / PRIMARY / INTAKE AIR.

Temperature Displayed	Malfunctions
-40°C (-40°F)	Open circuit
140°C (284°F) or higher	Short circuit

MONITOR DESCRIPTION

The ECM monitors the sensor voltage and uses this value to calculate the Intake Air Temperature (IAT). When the sensor output voltage deviates from the normal operating range, the ECM interprets this as a malfunction in the IAT sensor and sets a DTC.

Example:
If the sensor voltage output is more than 4.91 V for 0.5 seconds or more, the ECM determines that there is an open in the IAT sensor circuit, and sets DTC P0113. Conversely, if the voltage output is less than 0.18 V for 0.5 seconds or more, the ECM determines that there is a short in the sensor circuit, and sets DTC P0112.
If the malfunction is not repaired successfully, a DTC is set 0.5 seconds after the engine is next started.

MONITOR STRATEGY

Related DTCs	P0110: Intake air temperature sensor open/short (Fluctuating) P0112: Intake air temperature sensor short (Low voltage) P0113: Intake air temperature sensor open (High voltage)
Required Sensors/Components (Main)	Intake Air Temperature (IAT) sensor
Required sensors/Components (Related)	-
Frequency of Operation	Continuous
Duration	0.5 seconds
MIL Operation	Immediate
Sequence of Operation	None

TYPICAL ENABLING CONDITIONS

Monitor runs whenever following DTCs not present	None

TYPICAL MALFUNCTION THRESHOLDS

P0110:

Intake air temperature sensor voltage	Less than 0.18 V, or more than 4.91 V

P0112:

Intake air temperature sensor voltage	Less than 0.18 V

P0113:

Intake air temperature sensor voltage	More than 4.91 V

COMPONENT OPERATING RANGE

Intake air temperature sensor voltage	0.18 V to 4.91 V

WIRING DIAGRAM

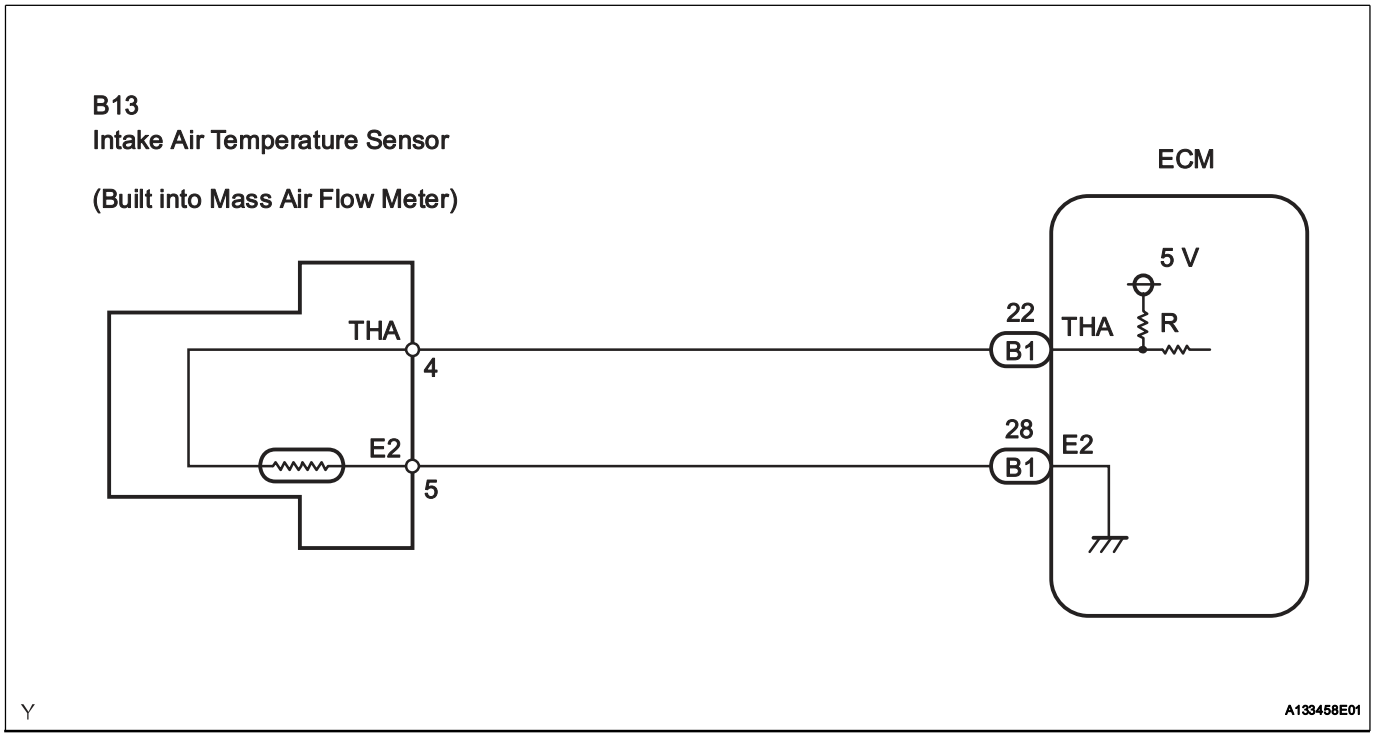

INSPECTION PROCEDURE

HINT:

- If other DTCs relating to different systems that have terminal E2 as the ground terminal are output simultaneously, terminal E2 may have an open circuit.
- Read freeze frame data using an intelligent tester. Freeze frame data record the engine condition when malfunctions are detected. When troubleshooting, freeze frame data can help determine if the vehicle was moving or stationary, if the engine was warmed up or not, if the air-fuel ratio was lean or rich, and other data, from the time the malfunction occurred.

1	READ VALUE USING INTELLIGENT TESTER (INTAKE AIR TEMPERATURE)

(a) Connect an intelligent tester to the DLC3.
(b) Turn the ignition switch ON.
(c) Turn the tester ON.
(d) Select the following menu items: DIAGNOSIS / ENHANCED OBD II / DATA LIST / PRIMARY / INTAKE AIR.
(e) Read the value displayed on the tester.
Standard:
Same as actual Intake Air Temperature (IAT).

Result

Temperature Displayed	Proceed To
-40°C (-40°F)	A
140°C (284°F) or higher	B
Same as actual IAT	C

HINT:

- If there is an open circuit, the intelligent tester indicates -40°C (-40°F).

- If there is a short circuit, the intelligent tester indicates 140°C (284°F) or higher.

B	**Go to step 4**
C	**CHECK FOR INTERMITTENT PROBLEMS**

A

2	READ VALUE USING INTELLIGENT TESTER (CHECK FOR OPEN IN WIRE HARNESS)

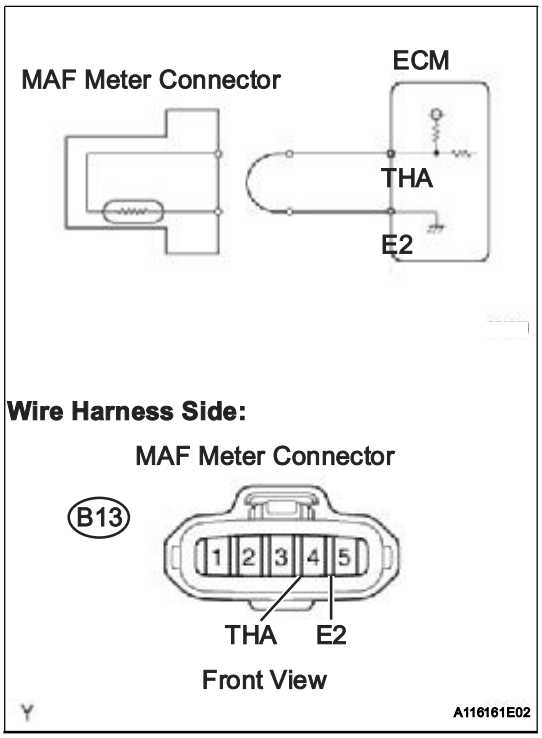

(a) Disconnect the B13 Mass Air Flow (MAF) meter connector.
(b) Connect terminals THA and E2 of the MAF meter wire harness side connector.
(c) Connect an intelligent tester to the DLC3.
(d) Turn the ignition switch ON.
(e) Turn the tester ON.
(f) Select the following menu items: DIAGNOSIS / ENHANCED OBD II / DATA LIST / PRIMARY / INTAKE AIR.
(g) Read the value displayed on the tester.
Standard:
140°C (284°F) or higher
(h) Reconnect the MAF meter connector.

OK	**CONFIRM GOOD CONNECTION TO SENSOR. IF OK, REPLACE MASS AIR FLOW METER (See page ES-409)**

NG

3	READ VALUE USING INTELLIGENT TESTER (CHECK FOR OPEN IN ECM)

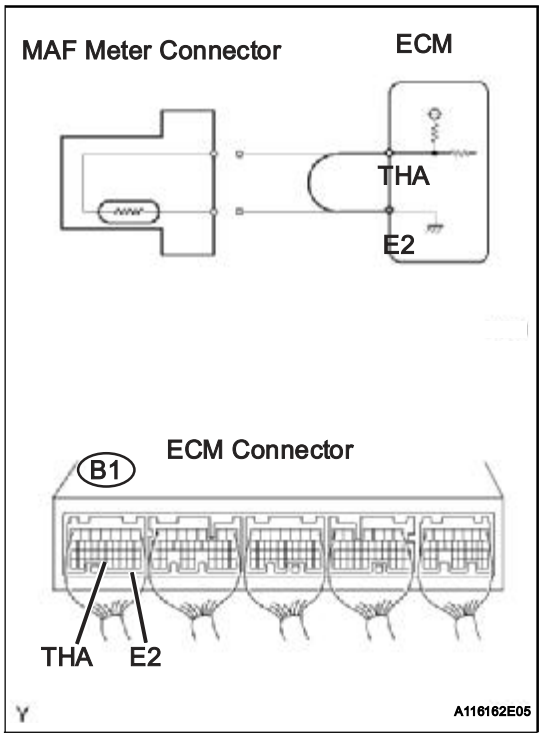

(a) Disconnect the B13 MAF meter connector.
(b) Connect terminals THA and E2 of the B1 ECM connector.
HINT:
Before checking, do visual and contact pressure checks on the ECM connector.
(c) Connect an intelligent tester to the DLC3.
(d) Turn the ignition switch ON.
(e) Turn the tester ON.
(f) Select the following menu items: DIAGNOSIS / ENHANCED OBD II / DATA LIST / PRIMARY / INTAKE AIR.
(g) Read the value displayed on the tester.
Standard:
140°C (284°F) or higher.
(h) Reconnect the MAF meter connector.

OK → **REPAIR OR REPLACE HARNESS OR CONNECTOR**

NG

CONFIRM GOOD CONNECTION TO ECM. IF OK, REPLACE ECM (See page ES-446)

4	READ VALUE USING INTELLIGENT TESTER (CHECK FOR SHORT IN WIRE HARNESS)

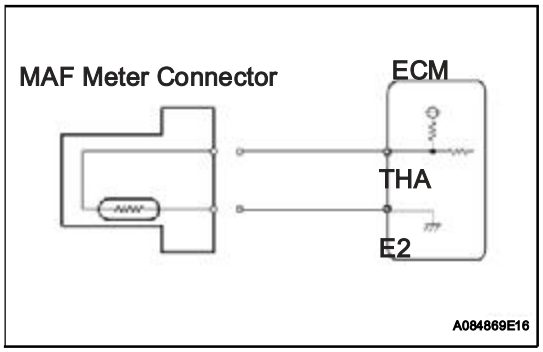

(a) Disconnect the B13 MAF meter connector.
(b) Connect an intelligent tester to the DLC3.
(c) Turn the ignition switch ON.
(d) Turn the tester ON.
(e) Select the following menu items: DIAGNOSIS / ENHANCED OBD II / DATA LIST / PRIMARY / INTAKE AIR.
(f) Read the value displayed on the tester.
Standard:
-40°C (-40°F)
(g) Reconnect the MAF meter connector.

OK → **REPLACE MASS AIR FLOW METER (See page ES-409)**

NG

5	READ VALUE USING INTELLIGENT TESTER (CHECK FOR SHORT ECM)

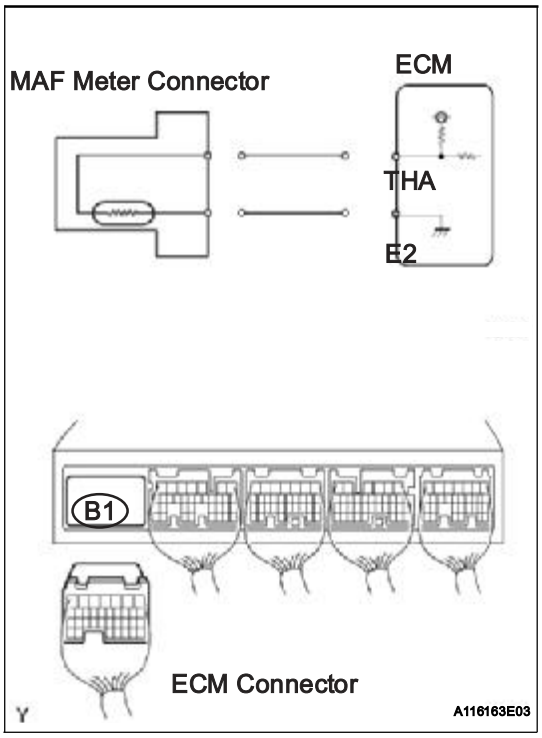

(a) Disconnect the B1 ECM connector.
(b) Connect an intelligent tester to the DLC3.
(c) Turn the ignition switch ON.
(d) Turn the tester ON.
(e) Select the following menu items: DIAGNOSIS / ENHANCED OBD II / DATA LIST / PRIMARY / INTAKE AIR.
(f) Read the value displayed on the tester.
Standard:
-40°C (-40°F)
(g) Reconnect the ECM connector.

OK → **REPAIR OR REPLACE HARNESS OR CONNECTOR**

NG

REPLACE ECM (See page ES-446)

ES

DTC	P0111	Intake Air Temperature Sensor Gradient Too High

DESCRIPTION

Fig. 1

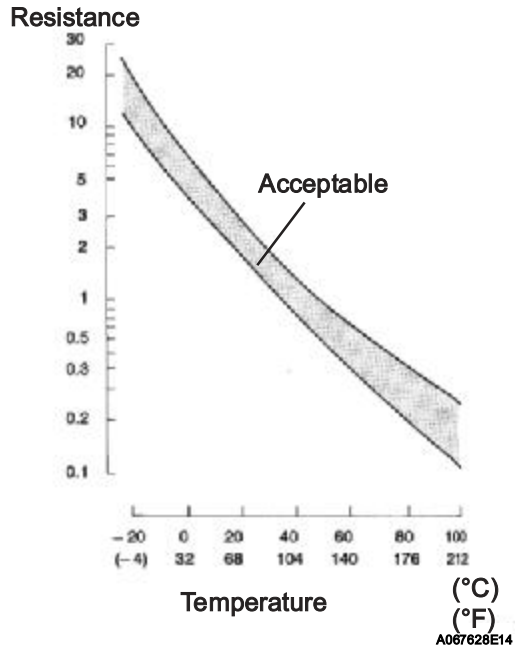

The Intake Air Temperature (IAT) sensor, mounted on the Mass Air Flow (MAF) meter, monitors the IAT. The IAT sensor has a built in thermistor with a resistance that varies according to the temperature of the intake air. When the IAT is low, the resistance of the thermistor increases. When the temperature is high, the resistance drops. These variations in resistance are transmitted to the ECM as voltage changes (See Fig. 1).
The IAT sensor is powered by a 5 V supply from the THA terminal of the ECM, via resistor R.
Resistor R and the IAT sensor are connected in series. When the resistance value of the IAT sensor changes, according to changes in the IAT, the voltage at terminal THA also varies. Based on this signal, the ECM increases the fuel injection volume when the engine is cold to improve driveability.

DTC No.	DTC Detection Conditions	Trouble Areas
P0111	When either of following conditions met (2 trip detection logic): • The intake air temperature rise is large, from the previous trip warm-up to the following trip. • When the change in the intake air temperature after engine start is less than the threshold value.	Mass air flow meter

MONITOR DESCRIPTION

The ECM performs OBD II monitoring based on the values from the intake air temperature sensor. If there is no change of the sensor value within the normal range, the ECM will not be able to perform OBD II monitoring or will misdiagnose that there is a malfunction in the sensor. The ECM detects the stuck intake air temperature sensor value by performing monitoring after the ignition switch is turned OFF or START.

MONITOR STRATEGY

Related DTCs	P0111: Intake air temperature sensor rationality (After engine stop) P0111: Intake air temperature sensor rationality (After cold engine start)

Required Sensors/Components (Main)	Intake Air Temperature (IAT) sensor
Required Sensors/Components (Sub)	Engine Coolant Temperature (ECT) sensor and Mass Air Flow (MAF) meter
Frequency of Operation	Once per driving cycle
Duration	10 seconds or more
MIL Operation	2 driving cycles
Sequence of Operation	None

TYPICAL ENABLING CONDITIONS

All:

Monitor runs whenever following DTCs are not present	-
Battery voltage	10.5 V or more

ES

After engine stop:

Time after engine start	10 seconds or more
ECT sensor circuit	OK
ECT in previous driving cycle	80°C (176°F) or more
Accumulated MAF amount in previous driving cycle	7,000 g or more
ECT when 30 minutes elapsed after engine stop	20°C (68°F) or more

After cold engine start:

Key-off duration	5 hours
Time after engine start	10 seconds or more
ECT sensor circuit	OK
ECT	70°C (158°F) or more
Accumulated MAF amount	7,000 g or more
One of the following conditions 1 or 2 is met:	-
1. Duration while engine load is low	120 seconds or more
2. Duration while engine load is high	10 seconds or more

TYPICAL MALFUNCTION THRESHOLDS

After engine stop:

IAT change	Less than 1°C (2°F)

After cold engine start:

IAT change	Less than 1°C (2°F)

WIRING DIAGRAM

Refer to DTC P0110 (See page ES-102).

INSPECTION PROCEDURE

1	CHECK ANY OTHER DTCS OUTPUT (IN ADDITION TO DTC P0111)

(a) Connect the intelligent tester to the DLC3.
(b) Turn the ignition switch ON.
(c) Turn the tester ON.
(d) Enter the following menus: DIAGNOSIS / ENHANCED OBD II / DTC INFO / CURRENT CODES.
(e) Read DTCs.

Result

Display (DTC Output)	Proceed To
P0111 and other DTCs	A
P0111	B

HINT:
If any DTCs other than P0111 are output, troubleshoot those DTCs first.

B → **REPLACE MASS AIR FLOW METER (See page ES-409)**

A

GO TO DTC CHART (See page ES-57)

DTC	P0115	Engine Coolant Temperature Circuit

DTC	P0117	Engine Coolant Temperature Circuit Low Input

DTC	P0118	Engine Coolant Temperature Circuit High Input

DESCRIPTION

A thermistor is built into the Engine Coolant Temperature (ECT) sensor, of which the resistance value varies according to the ECT.
The structure of the sensor and its connection to the ECM are the same as those of the Intake Air Temperature (IAT) sensor.

ES

HINT:
When any of DTCs P0115, P0117 and P0118 are set, the ECM enters fail-safe mode. During fail-safe mode, the ECT is estimated to be 80°C (176°F) by the ECM. Fail-safe mode continues until a pass condition is detected.

DTC No.	Proceed To	DTC Detection Conditions	Trouble Areas
P0115	Step 1	Open or short in Engine Coolant Temperature (ECT) sensor circuit for 0.5 seconds (1 trip detection logic)	• Open or short in ECT sensor circuit • ECT sensor • ECM
P0117	Step 4	Short in Engine Coolant Temperature (ECT) sensor circuit for 0.5 seconds (1 trip detection logic)	• Short in ECT sensor circuit • ECT sensor • ECM
P0118	Step 2	Open in Engine Coolant Temperature (ECT) sensor circuit for 0.5 seconds (1 trip detection logic)	• Open in ECT sensor circuit • ECT sensor • ECM

HINT:
When any of these DTCs are set, check the ECT by selecting the following menu items on an intelligent tester: DIAGNOSIS / ENHANCED OBD II / DATA LIST / PRIMARY / COOLANT TEMP.

Temperature Displayed	Malfunctions
-40°C (-40°F)	Open circuit
140°C (284°F) or higher	Short circuit

MONITOR DESCRIPTION

The Engine Coolant Temperature (ECT) sensor is used to monitor the ECT. The ECT sensor has a thermistor with a resistance that varies according to the temperature of the engine coolant. When the coolant temperature is low, the resistance in the thermistor increases. When the temperature is high, the resistance drops.
These variations in resistance are reflected in the voltage output from the sensor. The ECM monitors the sensor voltage and uses this value to calculate the ECT. When the sensor output voltage deviates from the normal operating range, the ECM interprets this as a fault in the ECT sensor and sets a DTC.
Example:
If the sensor voltage output is more than 4.91 V for 0.5 seconds or more, the ECM determines that there is an open in the ECT sensor circuit, and sets DTC P0118. Conversely, if the voltage output is less than 0.14 V for 0.5 seconds or more, the ECM determines that there is a short in the sensor circuit, and sets DTC P0117.
If the malfunction is not repaired successfully, a DTC is set 0.5 seconds after the engine is next started.

MONITOR STRATEGY

Related DTCs	P0115: Engine coolant temperature sensor open/short (Fluctuating) P0117: Engine coolant temperature sensor short (Low voltage) P0118: Engine coolant temperature sensor open (High voltage)

Required Sensors/Components (Main)	Engine coolant temperature sensor
Required Sensors/Components (Related)	-
Frequency of Operation	Continuous
Duration	0.5 seconds
MIL Operation	Immediate
Sequence of Operation	None

TYPICAL ENABLING CONDITIONS

Monitor runs whenever following DTCs not present	None

TYPICAL MALFUNCTION THRESHOLDS

P0115:

Engine coolant temperature sensor voltage	Less than 0.14 V, or more than 4.91 V

P0117:

Engine coolant temperature sensor voltage	Less than 0.14 V

P0118:

Engine coolant temperature sensor voltage	More than 4.91 V

COMPONENT OPERATING RANGE

Engine coolant temperature sensor voltage	0.14 V to 4.91 V

WIRING DIAGRAM

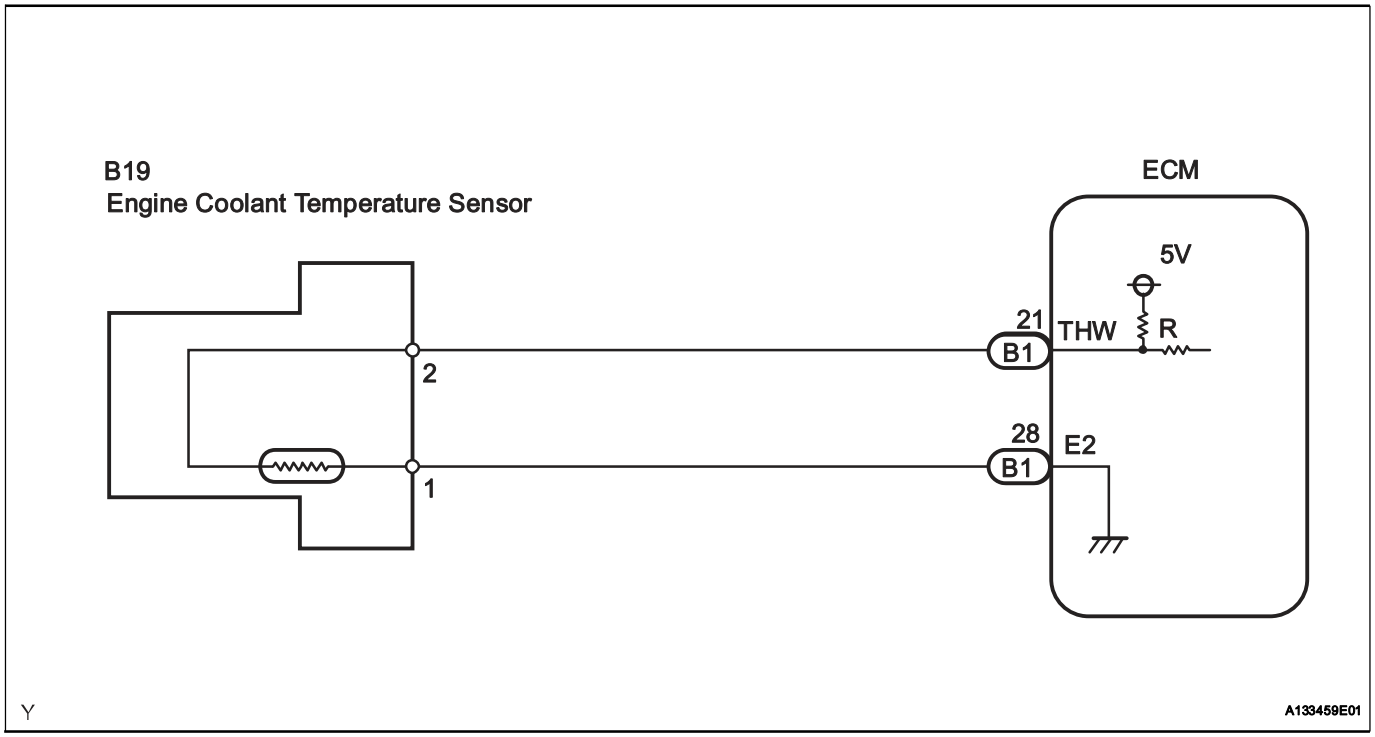

INSPECTION PROCEDURE

HINT:

- If other DTCs relating to different systems that have terminal E2 as the ground terminal are output simultaneously, terminal E2 may have an open circuit.
- Read freeze frame data using an intelligent tester. Freeze frame data record the engine condition when malfunctions are detected. When troubleshooting, freeze frame data can help determine if the vehicle was moving or stationary, if the engine was warmed up or not, if the air-fuel ratio was lean or rich, and other data, from the time the malfunction occurred.

1	READ VALUE USING INTELLIGENT TESTER (ENGINE COOLANT TEMPERATURE)

ES

(a) Connect an intelligent tester to the DLC3.
(b) Turn the ignition switch ON.
(c) Turn the tester ON.
(d) Select the following menu items: DIAGNOSIS / ENHANCED OBD II / DATA LIST / PRIMARY / COOLANT TEMP.
(e) Read the value displayed on the tester.
Standard:
80°C to 97°C (176°F to 207°F) with warm engine.

Result

Temperature Displayed	Proceed To
-40°C (-40°F)	A
140°C (284°F) or higher	B
80°C to 97°C (176°F to 207°F)	C

HINT:

- If there is an open circuit, the intelligent tester indicates -40°C (-40°F).
- If there is a short circuit, the intelligent tester indicates 140°C (284°F) or higher.

B → **Go to step 4**

C → **CHECK FOR INTERMITTENT PROBLEMS**

A

2	READ VALUE USING INTELLIGENT TESTER (CHECK FOR OPEN IN WIRE HARNESS)

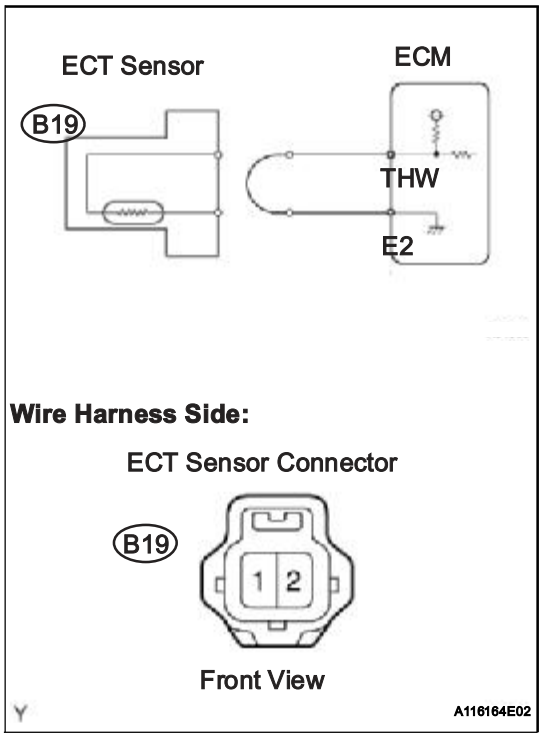

(a) Disconnect the B19 Engine Coolant Temperature (ECT) sensor connector.
(b) Connect terminals 1 and 2 of the ECT sensor connector on the wire harness side.
(c) Connect an intelligent tester to the DLC3.
(d) Turn the ignition switch ON.
(e) Turn the tester ON.
(f) Select the following menu items: DIAGNOSIS / ENHANCED OBD II / DATA LIST / PRIMARY / COOLANT TEMP.
(g) Read the value displayed on the tester.
Standard:
140°C (284°F) or higher
(h) Reconnect the ECT sensor connector.

OK → **CONFIRM GOOD CONNECTION TO SENSOR. IF OK, REPLACE ENGINE COOLANT TEMPERATURE SENSOR (See page ES-424)**

NG

3	READ VALUE USING INTELLIGENT TESTER (CHECK FOR OPEN IN ECM)

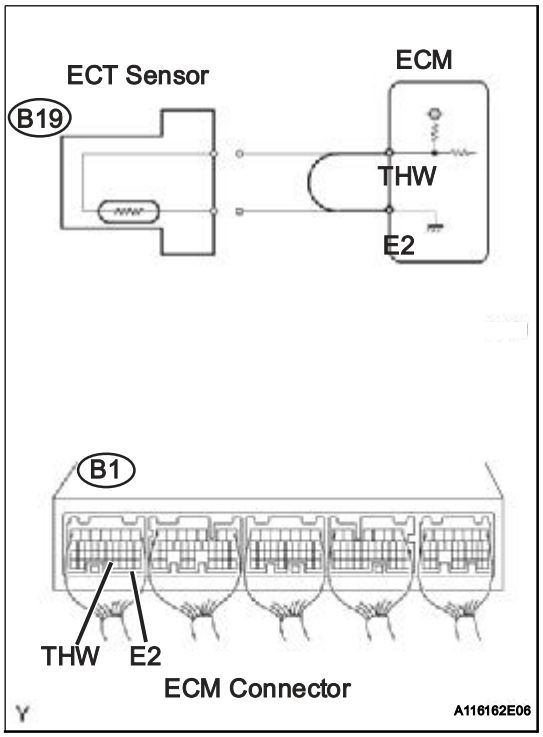

(a) Disconnect the B19 ECT sensor connector.
(b) Connect terminals THW and E2 of the B1 ECM connector.
HINT:
Before checking, do visual and contact pressure checks on the ECM connector.
(c) Connect an intelligent tester to the DLC3.
(d) Turn the ignition switch ON.
(e) Turn the tester ON.
(f) Select the following menu items: DIAGNOSIS / ENHANCED OBD II / DATA LIST / PRIMARY / COOLANT TEMP.
(g) Read the value displayed on the tester.
Standard:
140°C (284°F) or higher
(h) Reconnect the ECT sensor connector.

OK → **REPAIR OR REPLACE HARNESS OR CONNECTOR**

ES

NG

CONFIRM GOOD CONNECTION TO ECM. IF OK, REPLACE ECM (See page ES-446)

4	READ VALUE USING INTELLIGENT TESTER (CHECK FOR SHORT IN WIRE HARNESS)

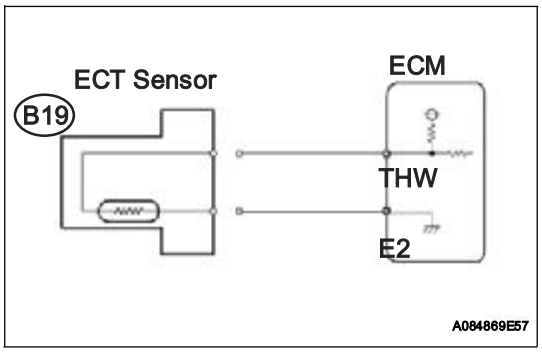

(a) Disconnect the B19 ECT sensor connector.
(b) Connect an intelligent tester to the DLC3.
(c) Turn the ignition switch ON.
(d) Turn the tester ON.
(e) Select the following menu items: DIAGNOSIS / ENHANCED OBD II / DATA LIST / PRIMARY / COOLANT TEMP.
(f) Read the value displayed on the tester.
Standard:
-40°C (-40°F)
(g) Reconnect the ECT sensor connector.

OK → **REPLACE ENGINE COOLANT TEMPERATURE SENSOR (See page ES-424)**

NG

5	READ VALUE USING INTELLIGENT TESTER (CHECK FOR SHORT IN ECM)

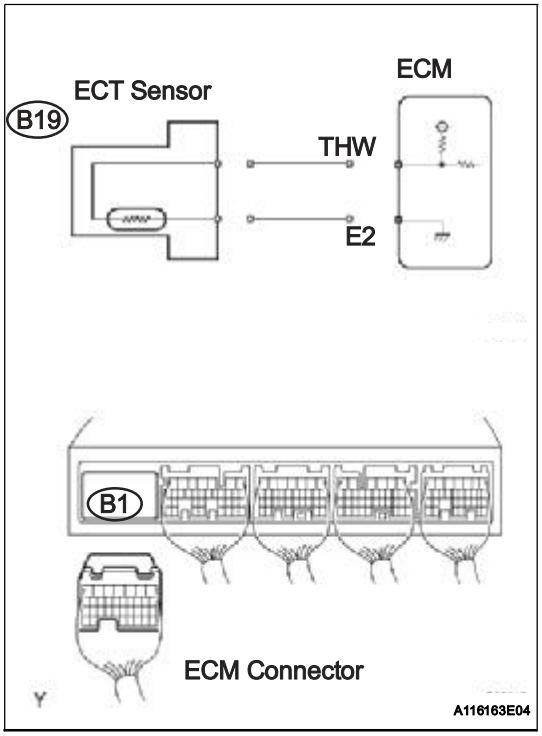

(a) Disconnect the B1 ECM connector.
(b) Connect an intelligent tester to the DLC3.
(c) Turn the ignition switch ON.
(d) Turn the tester ON.
(e) Select the following menu items: DIAGNOSIS / ENHANCED OBD II / DATA LIST / PRIMARY / COOLANT TEMP.
(f) Read the value displayed on the tester.
Standard:
-40°C (-40°F)
(g) Reconnect the ECM connector.

OK → **REPAIR OR REPLACE HARNESS OR CONNECTOR**

NG

REPLACE ECM (See page ES-446)

DTC	P0116	Engine Coolant Temperature Circuit Range / Performance Problem

DESCRIPTION

Refer to DTC P0115 (See page ES-109).

DTC No.	DTC Detection Conditions	Trouble Areas
P0116	When either of following conditions met (2 trip detection logic): • When cold engine started and engine warmed up, Engine Coolant Temperature (ECT) sensor value does not change. • After warmed up engine started, if ECT sensor value does not change when engine stopped and then next cold engine start performed, it determined that malfunction has occurred.	• Thermostat • ECT sensor

ES

MONITOR DESCRIPTION

ECT sensor cold start monitor

When a cold engine start is performed and then the engine is warmed up, if the ECT sensor value does not change, it is determined that a malfunction has occurred. If this is detected in 2 consecutive driving cycles, the MIL is illuminated and a DTC is set.

ECT sensor soak monitor

After a warmed up engine is started, if the ECT sensor value does not change when the engine is stopped and then the next cold engine start is performed, it is determined that a malfunction has occurred. If this is detected in 2 consecutive driving cycles, the MIL is illuminated and a DTC is set.

MONITOR STRATEGY

Related DTCs	P0116: ECT sensor cold start monitor P0116: ECT sensor soak monitor
Required Sensors/Components (Main)	ECT sensor
Required Sensors/Components (Related)	Intake Air Temperature (IAT) sensor and Mass Air Flow (MAF) meter
Frequency of Operation	Once per driving cycle
Duration	10 seconds
MIL Operation	2 driving cycles
Sequence of Operation	None

TYPICAL ENABLING CONDITIONS

ECT Sensor cold start monitor:

Monitor runs whenever following DTCs not present	P0100 to P0103: MAF meter P0110 to P0113: IAT sensor
Battery voltage	10.5 V or more
Time after engine start	1 second or more
ECT at engine start	Less than 60°C (140°F)
IAT sensor circuit	OK
Soak time	5 hours or more
Accumulated MAF	900 g or more
Engine	Running
Fuel cut	OFF
Difference between ECT at engine start and IAT	Less than 40°C (72°F)

ECT Sensor soak monitor:

Monitor runs whenever following DTCs not present	P0100 to P0103: MAF meter P0110 to P0113: IAT sensor
Battery voltage	10.5 V or more
Engine	Running
Soak time	5 hours or more
Either (a) or (b) condition met	-
(a) ECT	60°C (140°F) or more
(b) Accumulated MAF	5,000 g or more

TYPICAL MALFUNCTION THRESHOLDS

ES

ECT Sensor cold start monitor:

ECT sensor value change	Less than 5°C (9°F)

ECT Sensor soak monitor:

Difference between current ECT sensor value and previous ECT sensor value when engine stopped	Less than 5°C (9°F)

COMPONENT OPERATING RANGE

ECT	ECT sensor value changes in accordance with actual ECT

INSPECTION PROCEDURE

HINT:

- If any of DTCs P0115, P0117, P0118 or P0125 are set simultaneously with DTC P0116, the ECT sensor may have an open or a short circuit. Troubleshoot those DTCs first.
- Read freeze frame data using an intelligent tester. Freeze frame data record the engine condition when malfunctions are detected. When troubleshooting, freeze frame data can help determine if the vehicle was moving or stationary, if the engine was warmed up or not, if the air-fuel ratio was lean or rich, and other data, from the time the malfunction occurred.

1	CHECK ANY OTHER DTCS OUTPUT (IN ADDITION TO DTC P0116)

(a) Connect an intelligent tester to the DLC3.
(b) Turn the ignition switch ON.
(c) Turn the tester ON.
(d) Select the following menu items: DIAGNOSIS / ENHANCED II / DTC INFO / CURRENT CODES.
(e) Read the DTC.

Result

Display (DTC Output)	Proceed To
P0116	A
P0116 and other DTCs	B

B → GO TO DTC CHART (See page ES-57)

A

2	INSPECT WATER INLET WITH THERMOSTAT

(a) Remove the water inlet with thermostat (See page CO-12).

(b) Check the valve opening temperature of the thermostat.
Standard:
80°C to 84°C (176°F to 183°F)
HINT:
In addition to the above check, confirm that the valve is completely closed when the temperature is below the standard.

(c) Reinstall the water inlet with thermostat (See page CO-13).

NG → **REPLACE WATER INLET WITH THERMOSTAT (See page CO-12)**

OK

REPLACE ENGINE COOLANT TEMPERATURE SENSOR (See page ES-424)

DTC	P0120	Throttle / Pedal Position Sensor / Switch "A" Circuit
DTC	P0122	Throttle / Pedal Position Sensor / Switch "A" Circuit Low Input
DTC	P0123	Throttle / Pedal Position Sensor / Switch "A" Circuit High Input
DTC	P0220	Throttle / Pedal Position Sensor / Switch "B" Circuit
DTC	P0222	Throttle / Pedal Position Sensor / Switch "B" Circuit Low Input
DTC	P0223	Throttle / Pedal Position Sensor / Switch "B" Circuit High Input
DTC	P2135	Throttle / Pedal Position Sensor / Switch "A" / "B" Voltage Correlation

ES

HINT:
These DTCs relate to the Throttle Position (TP) sensor.

DESCRIPTION

This ETCS (Electronic Throttle Control System) does not use a throttle cable. The Throttle Position (TP) sensor is mounted on the throttle body, and detects the opening angle of the throttle valve. This sensor is a non-contact type, and uses Hall-effect elements, in order to yield accurate signals, even in extreme driving conditions, such as at high speeds as well as very low speeds.
The TP sensor has two sensor circuits which each transmits a signal, VTA1 and VTA2. VTA1 is used to detect the throttle valve angle and VTA2 is used to detect malfunctions in VTA1. The sensor signal voltages vary between 0 V and 5 V in proportion to the throttle valve opening angle, and are transmitted to the VTA terminals of the ECM.
As the valve closes, the sensor output voltage decreases and as the valve opens, the sensor output voltage increases. The ECM calculates the throttle valve opening angle according to these signals and controls the throttle actuator in response to driver inputs. These signals are also used in calculations such as air-fuel ratio correction, power increase correction and fuel-cut control.

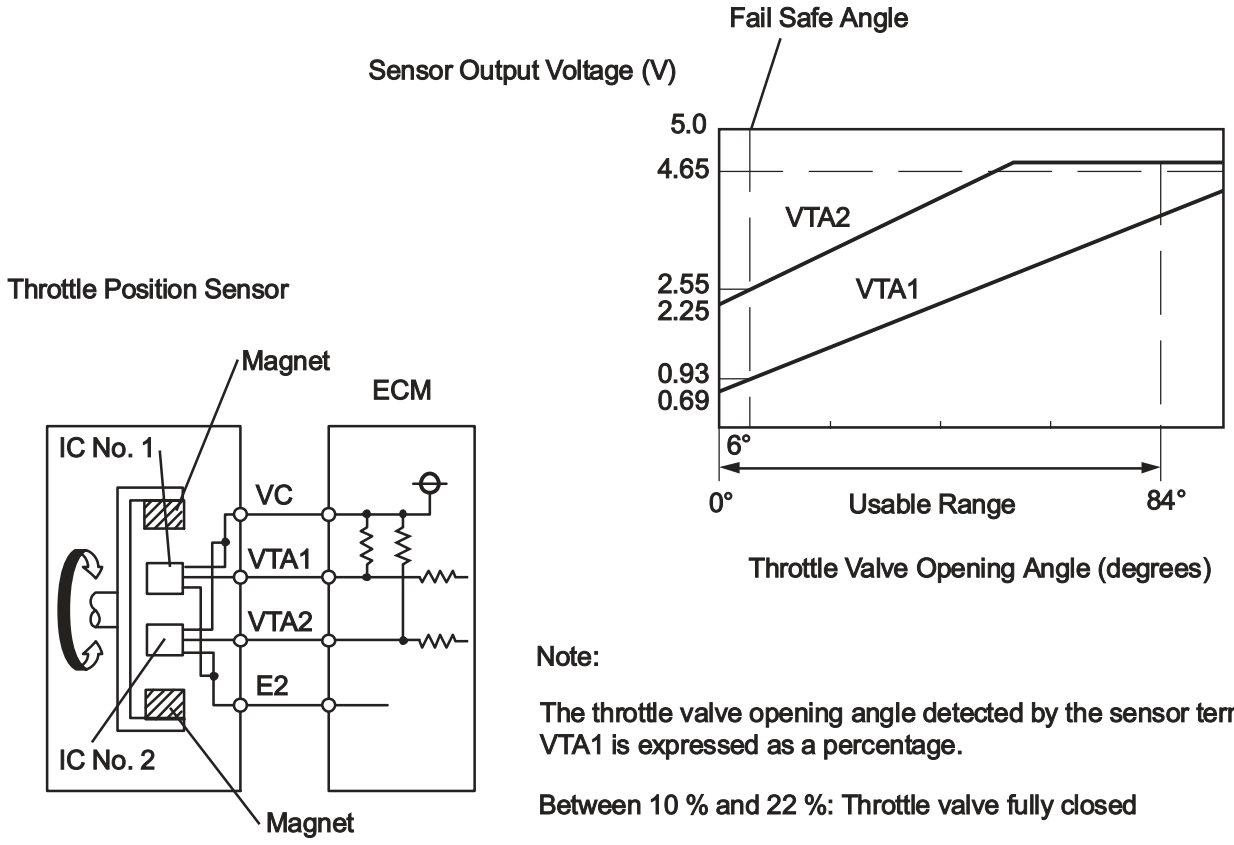

Note:

The throttle valve opening angle detected by the sensor terminal VTA1 is expressed as a percentage.

Between 10 % and 22 %: Throttle valve fully closed

Between 66 % and 98 %: Throttle valve fully open

Approximately 19 %: Fail-safe angle (6°)

Y

A122559E02

DTC No.	DTC Detection Conditions	Trouble Areas
P0120	Output voltage of VTA1 quickly fluctuates beyond lower and upper malfunction thresholds for 2 seconds when accelerator pedal depressed (1 trip detection logic)	• Throttle Position (TP) sensor (built into throttle body) • ECM
P0122	Output voltage of VTA1 0.2 V or less for 2 seconds when accelerator pedal depressed (1 trip detection logic)	• TP sensor (built into throttle body) • Short in VTA1 circuit • Open in VC circuit • ECM
P0123	Output voltage of VTA1 4.535 V or more for 2 seconds when accelerator pedal depressed (1 trip detection logic)	• TP sensor (built into throttle body) • Open in VTA1 circuit • Open in E2 circuit • Short between VC and VTA1 circuits • ECM
P0220	Output voltage of VTA2 quickly fluctuates beyond lower and upper malfunction thresholds for 2 seconds when accelerator pedal depressed (1 trip detection logic)	• TP sensor (built into throttle body) • ECM

DTC No.	DTC Detection Conditions	Trouble Areas
P0222	Output voltage of VTA2 1.75 V or less for 2 seconds when accelerator pedal depressed (1 trip detection logic)	• TP sensor (built into throttle body) • Short in VTA2 circuit • Open in VC circuit • ECM
P0223	Output voltage of VTA2 4.8 V or more, and VTA1 between 0.2 V and 2.02 V, for 2 seconds when accelerator pedal depressed (1 trip detection logic)	• TP sensor (built into throttle body) • Open in VTA2 circuit • Open in E2 circuit • Short between VC and VTA2 circuits • ECM
P2135	Either condition (a) or (b) met (1 trip detection logic) (a) Difference between output voltages of VTA1 and VTA2 0.02 V or less for 0.5 seconds or more (b) Output voltage of VTA1 0.2 V or less, and VTA2 1.75 V or less, for 0.4 seconds or more	• Short between VTA1 and VTA2 circuits • TP sensor (built into throttle body) • ECM

HINT:
- When any of these DTCs are set, check the throttle valve opening angle by selecting the following menu items on an intelligent tester: DIAGNOSIS / ENHANCED OBD II / DATA LIST / ETCS / THROTTLE POS #1 AND THROTTLE POS #2.
- THROTTLE POS #1 denotes the VTA1 signal, and THROTTLE POS #2 denotes the VTA2 signal .

Reference (Normal Condition)

Tester Display	Accelerator Pedal Fully Released	Accelerator Pedal Fully Depressed
THROTTLE POS #1	0.5 to 1.1 V	3.3 to 4.9 V
THROTTLE POS #2	2.1 to 3.1 V	4.6 to 5.0 V

MONITOR DESCRIPTION

The ECM uses the Throttle Position (TP) sensor to monitor the throttle valve opening angle. There are several checks that the ECM performs to confirm the proper operation of the TP sensor.
- A specific voltage difference is expected between the sensor terminals, VTA1 and VTA2, for each throttle valve opening angle. If the difference between VTA1 and VTA2 is incorrect, the ECM interprets this as a malfunction in the sensor, and sets a DTC.
- VTA1 and VTA2 each have a specific voltage range. If VTA1 or VTA2 is outside the normal operating range, the ECM interprets this as a malfunction in the sensor, and sets a DTC.
- VTA1 and VTA2 should never be close to the same voltage level. If VTA1 is within 0.02 V of VTA2, the ECM determines that there is a short circuit in the sensor, and sets a DTC.

If the malfunction is not repaired successfully, a DTC is set 10 seconds after the engine is next started.

MONITOR STRATEGY

Related DTCs	P0120: Throttle position sensor 1 range check (Fluctuating) P0122: Throttle position sensor 1 range check (Low voltage) P0123: Throttle position sensor 1 range check (High voltage) P0220: Throttle position sensor 2 range check (Fluctuating) P0222: Throttle position sensor 2 range check (Low voltage) P0223: Throttle position sensor 2 range check (High voltage) P2135: Throttle position sensor range check (Correlation)
Required Sensors/Components (Main)	Throttle position sensor
Required Sensors/Components (Related)	-
Frequency of Operation	Continuous
Duration	2 seconds: P0120, P0122, P0123, P0220, P0222 and P0223 (Accelerator pedal ON) 10 seconds: P0120, P0122, P0123, P0220, P0222 and P0223 (Accelerator pedal OFF) Within 0.5 seconds: P2135
MIL Operation	Immediate
Sequence of Operation	None

TYPICAL ENABLING CONDITIONS

Monitor runs whenever following DTCs not present	None

TYPICAL MALFUNCTION THRESHOLDS

P0120:

VTA1 voltage	0.2 V or less, or 4.535 V or more

P0122:

VTA1 voltage	0.2 V or less

P0123:

VTA1 voltage	4.535 V or more

P0220:

VTA2 voltage	1.75 V or less, or 4.8 V or more

P0222:

VTA2 voltage	1.75 V or less

P0223:

VTA2 voltage when VTA1 0.2 V or more, and 2.02 V or less	4.8 V or more

P2135:

Either of following conditions A or B met:	-
Condition A	-
Difference between VTA1 and VTA2 voltages	0.02 V or less
Condition B	-
VTA1 voltage	0.2 V or less
VTA2 voltage	1.75 V or less

COMPONENT OPERATING RANGE

VTA1 voltage	0.69 to 4.05 V
VTA2 voltage	2.25 to 4.8 V

FAIL-SAFE

When any of these DTCs, as well as other DTCs relating to ETCS (Electronic Throttle Control System) malfunctions, are set, the ECM enters fail-safe mode. During fail-safe mode, the ECM cuts the current to the throttle actuator off, and the throttle valve is returned to a 6° throttle angle by the return spring. The ECM then adjusts the engine output by controlling the fuel injection (intermittent fuel-cut) and ignition timing, in accordance with the accelerator pedal opening angle, to allow the vehicle to continue at a minimal speed.

If the accelerator pedal is depressed firmly and gently, the vehicle can be driven slowly.

Fail-safe mode continues until a pass condition is detected, and the ignition switch is then turned OFF.

WIRING DIAGRAM

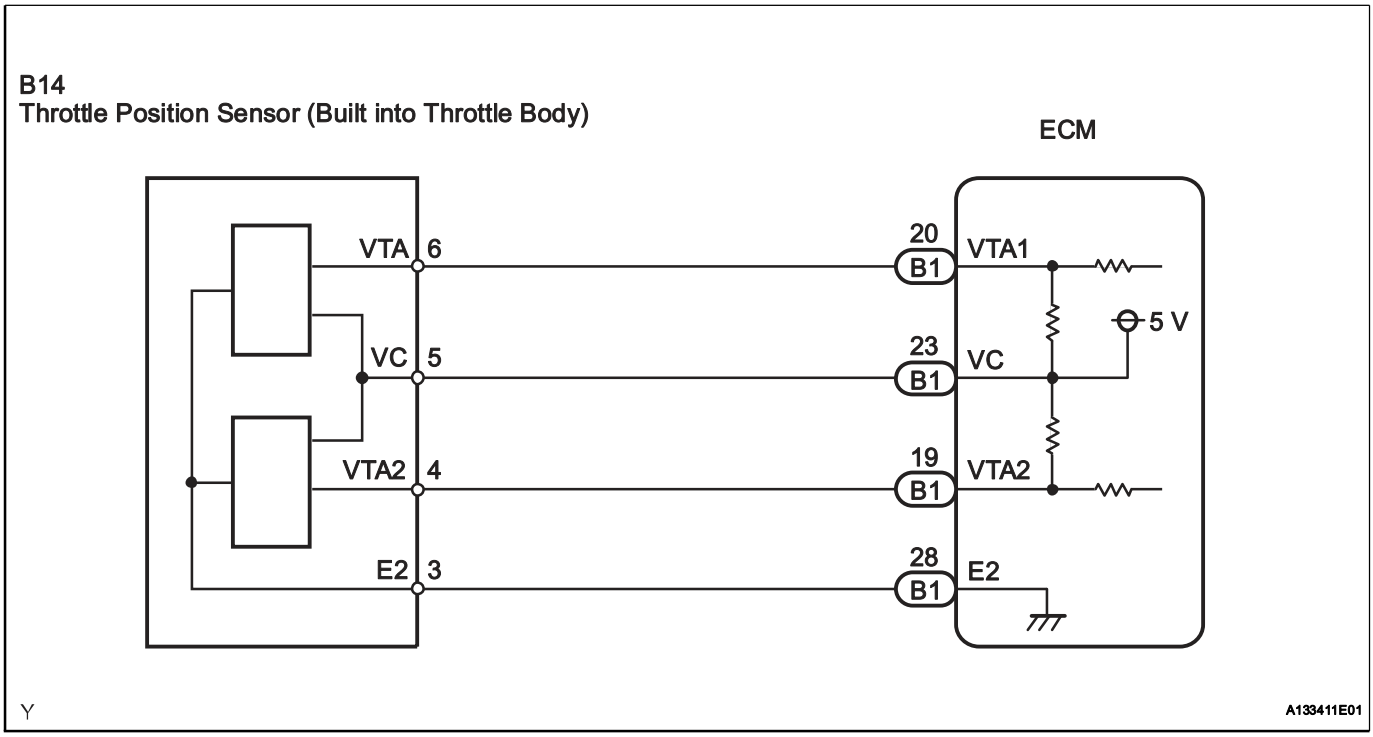

INSPECTION PROCEDURE

HINT:

- If other DTCs relating to different systems that have terminal E2 as the ground terminal are output simultaneously, terminal E2 may have an open circuit.
- Read freeze frame data using an intelligent tester. Freeze frame data record the engine condition when malfunctions are detected. When troubleshooting, freeze frame data can help determine if the vehicle was moving or stationary, if the engine was warmed up or not, if the air-fuel ratio was lean or rich, and other data, from the time the malfunction occurred.

1	READ VALUE USING INTELLIGENT TESTER (THROTTLE POS #1 AND THROTTLE POS #2)

(a) Connect an intelligent tester to the DLC3.
(b) Turn the ignition switch ON and turn the tester ON.
(c) Select the following menu items: DIAGNOSIS / ENHANCED OBD II / DATA LIST / ETCS / THROTTLE POS #1 and THROTTLE POS #2.
(d) Check the values displayed on the tester.

Result

TP#1 (VTA1) When Accelerator Pedal Released	TP#2 (VTA2) When Accelerator Pedal Released	TP#1 (VTA1) When Accelerator Pedal Depressed	TP#2 (VTA2) When Accelerator Pedal Depressed	Trouble Areas	Proceed To
0 to 0.2 V	0 to 0.2 V	0 to 0.2 V	0 to 0.2 V	VC circuit open	A
4.5 to 5.0 V	4.5 to 5.0 V	4.5 to 5.0 V	4.5 to 5.0 V	E2 circuit open	A
0 to 0.2 V, or 4.5 to 5.0 V	2.1 to 3.1 V (Fail-safe)	0 to 0.2 V, or 4.5 to 5.0 V	2.1 to 3.1 V (Fail-safe)	VTA1 circuit open or ground short	A
Approximately 0.93 V (Fail-safe)	0 to 0.2 V, or 4.5 to 5.0 V	Approximately 2.55 V (Fail-safe)	0 to 0.2 V, or 4.5 to 5.0 V	VTA2 circuit open or ground short	A

TP#1 (VTA1) When Accelerator Pedal Released	TP#2 (VTA2) When Accelerator Pedal Released	TP#1 (VTA1) When Accelerator Pedal Depressed	TP#2 (VTA2) When Accelerator Pedal Depressed	Trouble Areas	Proceed To
0.5 to 1.1 V	2.1 to 3.1 V	3.3 to 4.9 V	4.6 to 5.0 V	TP sensor circuit normal	B

HINT:
TP#1 denotes THROTTLE POS #1, and TP#2 denotes THROTTLE POS#2.

B → **Go to step 5**

A

2 CHECK HARNESS AND CONNECTOR (THROTTLE POSITION SENSOR - ECM)

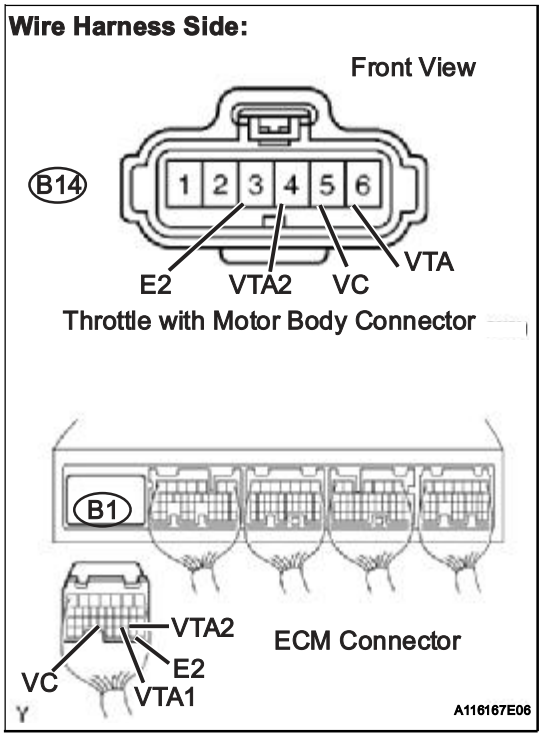

(a) Disconnect the B14 throttle with motor body connector.
(b) Disconnect the B1 ECM connector.
(c) Check the resistance.

Standard Resistance (Check for open)

Tester Connections	Specified Conditions
VC (B14-5) - VC (B1-23)	Below 1 Ω
VTA (B14-6) - VTA1 (B1-20)	
VTA2 (B14-4) - VTA2 (B1-19)	
E2 (B14-3) - E2 (B1-28)	

Standard Resistance (Check for short)

Tester Connections	Specified Conditions
VC (B14-5) or VC (B1-23) - Body grouB14nd	10 kΩ or higher
VTA (B14-6) or VTA1 (B1-20) - Body ground	
VTA2 (B14-4) or VTA2 (B1-19) - Body ground	

(d) Reconnect the throttle with motor body connector.
(e) Reconnect the ECM connector.

NG → **REPAIR OR REPLACE HARNESS OR CONNECTOR**

OK

3	INSPECT ECM (VC VOLTAGE)

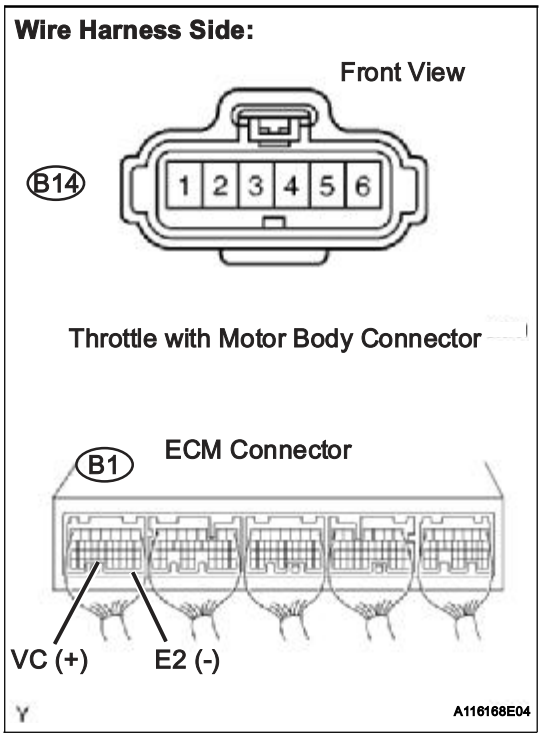

(a) Disconnect the B14 throttle with motor body connector.
(b) Turn the ignition switch ON.
(c) Measure the voltage between the terminals of the B1 ECM connector.

Standard Voltage

Tester Connections	Specified Conditions
VC (B1-23) - E2 (B1-28)	4.5 to 5.5 V

(d) Reconnect the throttle with motor body connector.

NG → **REPLACE ECM (See page ES-446)**

OK

4	REPLACE THROTTLE WITH MOTOR BODY ASSEMBLY

Replace the throttle with motor body assembly (See page ES-428).

NEXT

5	CHECK WHETHER DTC OUTPUT RECURS (THROTTLE POSITION SENSOR DTCS)

(a) Connect an intelligent tester to the DLC3.
(b) Turn the ignition switch ON and turn the tester ON.
(c) Clear DTCs (See page ES-38).
(d) Start the engine.
(e) Allow the engine to idle for 15 seconds or more.
(f) Select the following menu items: DIAGNOSIS / ENHANCED OBD II / DTC INFO / CURRENT CODES.
(g) Read DTCs.

Result

Display (DTC Output)	Proceed To
P0120, P0122, P0123, P0220, P0222, P0223 and/or P2135	A
No output	B

B → **SYSTEM OK**

A

REPLACE ECM (See page ES-446)

DTC	P0121	Throttle / Pedal Position Sensor / Switch "A" Circuit Range / Performance Problem

HINT:
This DTC relates to the Throttle Position (TP) sensor.

DESCRIPTION

Refer to DTC P0120 (See page ES-117).

DTC No.	DTC Detection Conditions	Trouble Areas
P0121	Difference between VTA1 and VTA2 voltages less than 0.8 V, or more than 1.6 V for 2 seconds (1 trip detection logic)	• TP sensor (built into throttle body)

ES

MONITOR DESCRIPTION

The ECM uses the TP sensor to monitor the throttle valve opening angle.
This sensor transmits two signals: VTA1 and VTA2. VTA1 is used to detect the throttle opening angle and VTA2 is used to detect malfunctions in VTA1. The ECM performs several checks to confirm the proper operation of the TP sensor and VTA1.
For each throttle opening angle, a specific voltage difference is expected between the outputs of VTA1 and VTA2. If the voltage output difference between the two signals deviates from the normal operating range, the ECM interprets this as a malfunction of the TP sensor. The ECM illuminates the MIL and sets the DTC.
If the malfunction is not repaired successfully, the DTC is set 2 seconds after the engine is next started.

MONITOR STRATEGY

Related DTCs	P0121: TP sensor rationality
Required Sensors/Components (Main)	TP sensor
Required Sensors/Components (Related)	-
Frequency of Operation	Continuous
Duration	Within 2 seconds
MIL Operation	Immediate
Sequence of Operation	None

TYPICAL ENABLING CONDITIONS

Either of following conditions A or B is met	-
A. Ignition switch	ON
B. Electric throttle motor power	ON
TP sensor malfunction (P0120, P0122, P0123, P0220, P0222, P0223, P2135)	Not detected

TYPICAL MALFUNCTION THRESHOLDS

Either of following conditions is met	-
"Difference of TP sensor voltage between VTA1 and VTA2 x 0.8"	Higher than 1.6 V
"Difference of TP sensor voltage between VTA1 and VTA2 x 0.8"	Lower than 0.8 V

FAIL-SAFE

When this DTC, as well as other DTCs relating to ETCS (Electronic Throttle Control System) malfunctions, is set, the ECM enters fail-safe mode. During fail-safe mode, the ECM cuts the current to the throttle actuator off, and the throttle valve is returned to a 6° throttle angle by the return spring. The ECM then adjusts the engine output by controlling the fuel injection (intermittent fuel-cut) and ignition timing, in accordance with the accelerator pedal opening angle, to allow the vehicle to continue at a minimal speed. If the accelerator pedal is depressed firmly and gently, the vehicle can be driven slowly. Fail-safe mode continues until a pass condition is detected, and the ignition switch is then turned OFF.

INSPECTION PROCEDURE

HINT:

Read freeze frame data using an intelligent tester. Freeze frame data record the engine condition when malfunctions are detected. When troubleshooting, freeze frame data can help determine if the vehicle was moving or stationary, if the engine was warmed up or not, if the air-fuel ratio was lean or rich, and other data, from the time the malfunction occurred.

1	CHECK ANY OTHER DTCS OUTPUT (IN ADDITION TO DTC P0121)

(a) Connect an intelligent tester to the DLC3.
(b) Turn the ignition switch ON.
(c) Turn the tester ON.
(d) Enter the following menus: DIAGNOSIS / ENHANCED II / DTC INFO / CURRENT CODES.
(e) Read the DTC.

Result

Display (DTC Output)	Proceed to
P0121	A
P0121 and other DTCs	B

B → **GO TO DTC CHART (See page ES-57)**

A

REPLACE THROTTLE WITH MOTOR BODY ASSEMBLY (See page ES-428)

DTC	P0125	Insufficient Coolant Temperature for Closed Loop Fuel Control

DESCRIPTION

Refer to DTC P0115 (See page ES-109).

DTC No.	DTC Detection Conditions	Trouble Areas
P0125	Engine coolant temperature (ECT) does not reach closed-loop enabling temperature for 20 minutes (this period varies with engine start ECT) (2 trip detection logic)	• Cooling system • Engine coolant temperature sensor • Thermostat

ES

MONITOR DESCRIPTION

The resistance of the ECT sensor varies in proportion to the actual ECT. The ECM supplies a constant voltage to the sensor and monitors the signal output voltage of the sensor. The signal voltage output varies according to the changing resistance of the sensor. After the engine is started, the ECT is monitored through this signal. If the ECT sensor indicates that the engine is not yet warm enough for closed-loop fuel control, despite a specified period of time having elapsed since the engine was started, the ECM interprets this as a malfunction in the sensor or cooling system and sets the DTC.

Example:

The ECT is 0°C (32°F) at engine start. After about 1 minute running time, the ECT sensor still indicates that the engine is not warm enough to begin closed-loop fuel (air-fuel ratio feedback) control. The ECM interprets this as a malfunction in the sensor or cooling system and sets the DTC.

MONITOR STRATEGY

Related DTCs	P0125: Insufficient engine coolant temperature for closed-loop fuel control
Required Sensors/Components (Main)	Engine coolant temperature sensor, thermostat, cooling system
Required Sensors/Components (Related)	-
Frequency of Operation	Once per driving cycle
Duration	61 seconds: Engine coolant temperature at engine start -3.3°C (26°F) or more 109 seconds: Engine coolant temperature at engine start -14.5 to -3.3°C (5.9 to 26°F) 1,200 seconds: Engine coolant temperature at engine start -14.5°C (5.9°F)
MIL Operation	2 driving cycles
Sequence of Operation	None

TYPICAL ENABLING CONDITIONS

Monitor runs whenever following DTCs not present	P0100 - P0103 (MAF meter) P0110 - P0113 (IAT sensor) P0115 - P0118 (ECT sensor)
Thermostat fail	Not detected

TYPICAL MALFUNCTION THRESHOLDS

Time until actual engine coolant temperature reaches closed-loop fuel control enabling temperature	61 seconds: Engine coolant temperature at engine start -3.3°C (26°F) or more 109 seconds: Engine coolant temperature at engine start -14.5 to -3.3°C (5.9 to 26°F) 1,200 seconds: Engine coolant temperature at engine start -14.5°C (5.9°F)

WIRING DIAGRAM

Refer to DTC P0115 (See page ES-110).

INSPECTION PROCEDURE

HINT:

- If any of DTCs P0115, P0116, P0117 or P0118 are set simultaneously with DTC P0125, the Engine Coolant Temperature (ECT) sensor may have an open or a short circuit. Troubleshoot those DTCs first.
- Read freeze frame data using an intelligent tester. Freeze frame data record the engine condition when malfunctions are detected. When troubleshooting, freeze frame data can help determine if the vehicle was moving or stationary, if the engine was warmed up or not, if the air-fuel ratio was lean or rich, and other data, from the time the malfunction occurred.

1 CHECK ANY OTHER DTCS OUTPUT (IN ADDITION TO DTC P0125)

(a) Connect an intelligent tester to the DLC3.
(b) Turn the ignition switch ON.
(c) Turn the tester ON.
(d) Select the following menu items: DIAGNOSIS / ENHANCED OBD II / DTC INFO / CURRENT CODES.
(e) Read DTCs.

Result

Display (DTC Output)	Proceed to
P0125	A
P0125 and other DTCs	B

HINT:
If any DTCs other than P0125 are output, troubleshoot those DTCs first.

B → **GO TO DTC CHART (See page ES-57)**

A

2 INSPECT WATER INLET WITH THERMOSTAT (THERMOSTAT)

(a) Remove the water inlet with thermostat (See page CO-12).
(b) Check the valve opening temperature of the thermostat.
Standard:
80° to 84°C (176° to 183°F)
HINT:
In addition to the above check, confirm that the valve is completely closed when the temperature is below the standard.
(c) Reinstall the water inlet with thermostat (See page CO-13).

NG → **REPLACE WATER INLET WITH THERMOSTAT (See page CO-12)**

OK

3	CHECK COOLING SYSTEM

(a) Check for defects in the cooling system that might cause the system to be too cold, such as abnormal radiator fan operation or any modifications.

NG → **REPAIR OR REPLACE COOLING SYSTEM**

OK

REPLACE ENGINE COOLANT TEMPERATURE SENSOR (See page ES-424)

DTC	P0128	Coolant Thermostat (Coolant Temperature Below Thermostat Regulating Temperature)

HINT:
This DTC relates to the thermostat.

DESCRIPTION

This DTC is set when the Engine Coolant Temperature (ECT) does not reach 75°C (167°F) despite sufficient engine warm-up time.

DTC No.	DTC Detection Conditions	Trouble Areas
P0128	Conditions (a), (b) and (c) are met for 5 seconds (2 rip detection logic) (a) Cold start (b) Engine warmed up (c) ECT less than 75°C (167°F)	• Thermostat • Cooling system • ECT sensor • ECM

ES

MONITOR DESCRIPTION

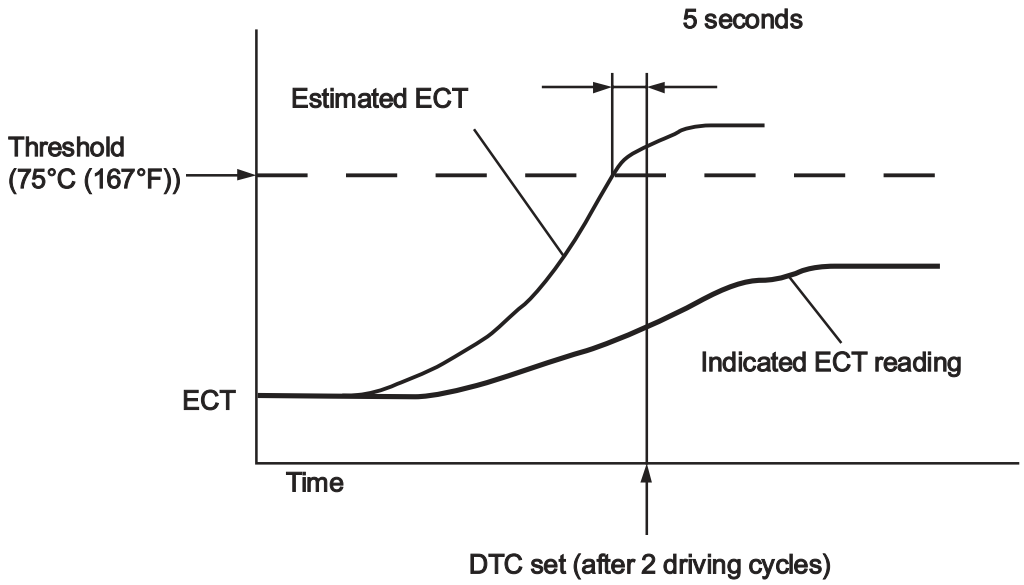

Y A115933E01

The ECM estimates the ECT based on the starting temperature, engine loads, and engine speeds. The ECM then compares the estimated temperature with the actual ECT. When the estimated ECT reaches 75°C (167°F), the ECM checks the actual ECT. If the actual ECT is less than 75°C (167°F), the ECM interprets this as a malfunction in the thermostat or the engine cooling system and sets the DTC.

MONITOR STRATEGY

Related DTCs	P0128: Coolant Thermostat
Required Sensors/Components (Main)	Engine Coolant Temperature (ECT) sensor, Thermostat
Required Sensors/Components (Related)	Intake Air Temperature (IAT) sensor, Vehicle speed sensor
Frequency of Operation	Once per driving cycle
Duration	900 seconds
MIL Operation	2 driving cycles
Sequence of Operation	None

TYPICAL ENABLING CONDITIONS

ES

Monitor runs whenever following DTCs not present	P0010, P0020 (OCV Bank 1, 2) P0011 (VVT System 1 - Advance) P0012 (VVT System 1 - Retard) P0021 (VVT System 2 - Advance) P0022 (VVT System 2 - Retard) P0031, P0032, P0051, P0052 (A/F sensor heater - Sensor 1) P0100 - P0103 (MAF meter) P0110 - P0113 (IAT sensor) P0115 - P0118 (ECT sensor) P0125 (Insufficient ECT for closed loop) P0171, P0172, P0174, P0175 (Fuel system) P0300 - P0306 (Misfire) P0335 (CKP sensor) P0340 (CMP sensor) P0351 - P0356 (igniter) P0500 (VSS) P2196, P2198 (A/F sensor - rationality) P2A00, P2A03 (A/F sensor - slow response)
Battery voltage	11 V or more
Either of following conditions 1 or 2 met:	-
1. All of following conditions met:	-
(a) ECT at engine start - IAT at engine start	-15° to 7°C (-27° to 12.6°F)
(b) ECT at engine start	-10° to 56°C (14° to 133°F)
(c) IAT at engine start	-10° to 56°C (14° to 133°F)
2. All of following conditions met:	-
(a) ECT at engine start - IAT at engine start	More than 7°C (12.6°F)
(b) ECT at engine start	56°C (133°F) or less
(c) IAT at engine start	-10°C (14°F) or more
Accumulated time with 80 mph (128 km/h) or more of vehicle speed	Less than 20 seconds

TYPICAL MALFUNCTION THRESHOLDS

Duration that following conditions A and B met	5 seconds or more
A. Simulated ECT	75°C (167°F) or more
B. ECT sensor output	Less than 75°C (167°F)

INSPECTION PROCEDURE

HINT:

Read freeze frame data using an intelligent tester. Freeze frame data record the engine condition when malfunctions are detected. When troubleshooting, freeze frame data can help determine if the vehicle was moving or stationary, if the engine was warmed up or not, if the air-fuel ratio was lean or rich, and other data, from the time the malfunction occurred.

1	CHECK ANY OTHER DTCS OUTPUT (IN ADDITION TO DTC P0128)

(a) Connect an intelligent tester to the DLC3.
(b) Turn the ignition switch ON.
(c) Turn the tester ON.
(d) Select the following menu items: DIAGNOSIS / ENHANCED OBD II / DTC INFO / CURRENT CODES.
(e) Read the DTC.

Result

Display (DTC Output)	Proceed to
P0128	A
P0128 and other DTCs	B

HINT:
If any DTCs other than P0128 are output, troubleshoot those DTCs first.

B → **GO TO DTC CHART (See page ES-57)**

A

2	CHECK COOLING SYSTEM

(a) Check for defects in the cooling system that might cause the system to be too cold, such as abnormal radiator fan operation or any modifications.

NG → **REPAIR OR REPLACE COOLING SYSTEM**

OK

3	INSPECT WATER INLET WITH THERMOSTAT (THERMOSTAT)

(a) Remove the water inlet with thermostat (See page CO-12).
(b) Check the valve opening temperature of the thermostat.
Standard:
80° to 84°C (176° to 183°F)
HINT:
In addition to the above check, confirm that the valve is completely closed when the temperature is below the standard.
(c) Reinstall the water inlet with thermostat (See page CO-13).

NG → **REPLACE WATER INLET WITH THERMOSTAT (See page CO-12)**

OK

REPLACE ECM (See page ES-446)

DTC	P0136	Oxygen Sensor Circuit Malfunction (Bank 1 Sensor 2)
DTC	P0137	Oxygen Sensor Circuit Low Voltage (Bank 1 Sensor 2)
DTC	P0138	Oxygen Sensor Circuit High Voltage (Bank 1 Sensor 2)
DTC	P0156	Oxygen Sensor Circuit Malfunction (Bank 2 Sensor 2)
DTC	P0157	Oxygen Sensor Circuit Low Voltage (Bank 2 Sensor 2)
DTC	P0158	Oxygen Sensor Circuit High Voltage (Bank 2 Sensor 2)

HINT:
Sensor 2 refers to the sensor mounted behind the Three-Way Catalytic Converter (TWC) and located far from the engine assembly.

DESCRIPTION

In order to obtain a high purification rate of the carbon monoxide (CO), hydrocarbon (HC) and nitrogen oxide (NOx) components in the exhaust gas, a TWC (Three-Way Catalytic Converter) is used. For the most efficient use of the TWC, the air-fuel ratio must be precisely controlled so that it is always close to the stoichiometric air-fuel level. For the purpose of helping the ECM to deliver accurate air-fuel ratio control, a Heated Oxygen (HO2) sensor is used.
The HO2 sensor is located behind the TWC, and detects the oxygen concentration in the exhaust gas. Since the sensor is integrated with the heater that heats the sensing portion, it is possible to detect the oxygen concentration even when the intake air volume is low (the exhaust gas temperature is low).
When the air-fuel ratio becomes lean, the oxygen concentration in the exhaust gas is rich. The HO2 sensor informs the ECM that the post-TWC air-fuel ratio is lean (low voltage, i.e. less than 0.45 V).
Conversely, when the air-fuel ratio is richer than the stoichiometric air-fuel level, the oxygen concentration in the exhaust gas becomes lean. The HO2 sensor informs the ECM that the post-TWC air-fuel ratio is rich (high voltage, i.e. more than 0.45 V). The HO2 sensor has the property of changing its output voltage drastically when the air-fuel ratio is close to the stoichiometric level.
The ECM uses the supplementary information from the HO2 sensor to determine whether the air-fuel ratio after the TWC is rich or lean, and adjusts the fuel injection time accordingly. Thus, if the HO2 sensor is working improperly due to internal malfunctions, the ECM is unable to compensate for deviations in the primary air-fuel ratio control.

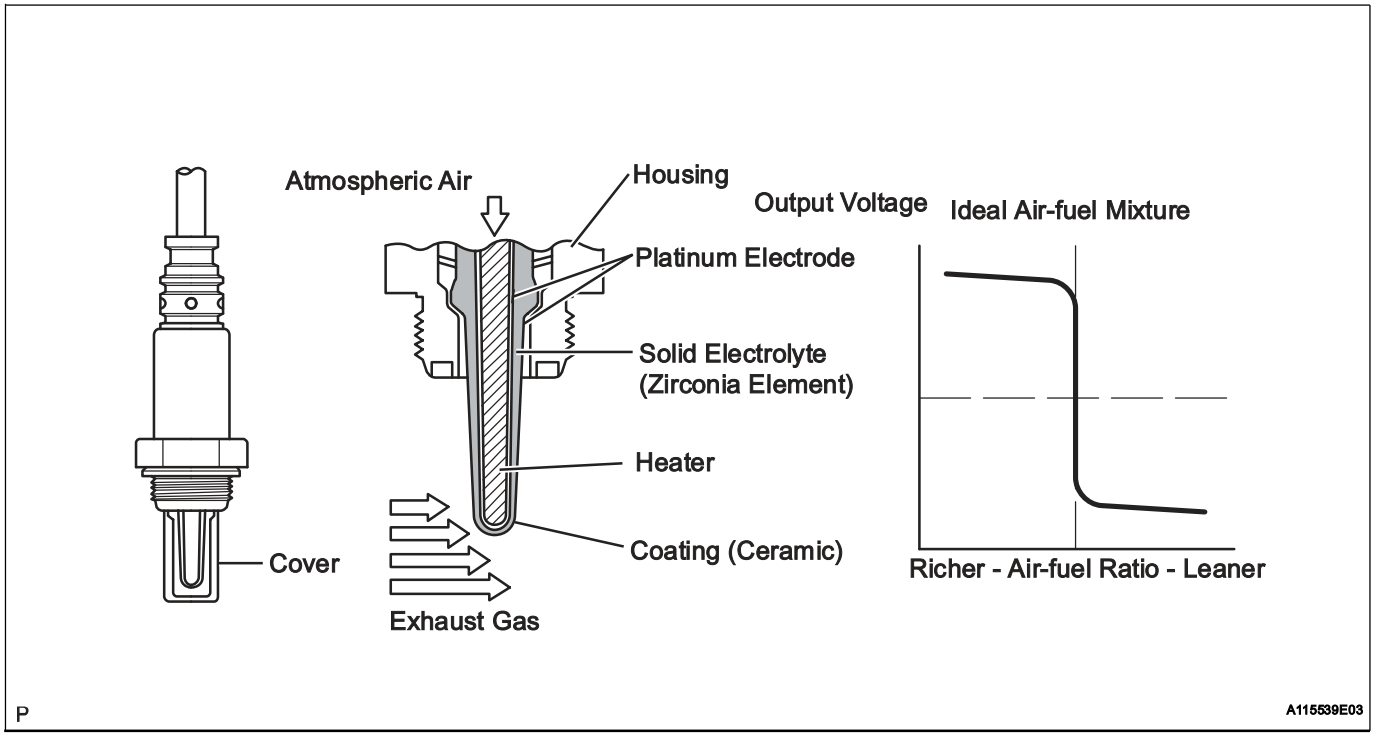

DTC No.	DTC Detection Conditions	Trouble Areas
P0136 P0156	• Abnormal voltage output: During active air-fuel ratio control, following conditions (a) and (b) met for certain period of time (2 trip detection logic) (a) Heated Oxygen (HO2) sensor voltage does not decrease to less than 0.21 V (b) HO2 sensor voltage does not increase to more than 0.59 V • Low impedance: Sensor impedance less than 5 Ω for more than 30 seconds when ECM presumes sensor to being warmed up and operating normally (2 trip detection logic)	• Open or short in HO2 sensor (bank 1, 2 sensor 2) circuit • HO2 sensor (bank 1, 2 sensor 2) • HO2 sensor heater (bank 1, 2 sensor 2) • Air-Fuel Ratio (A/F) sensor (bank 1, 2 sensor 1) • EFI relay • Gas leakage from exhaust system
P0137 P0157	• Low voltage (open): During active air-fuel ratio control, following conditions (a) and (b) met for certain period of time (2 trip detection logic) (a) HO2 sensor voltage output less than 0.21 V (b) Target air-fuel ratio rich • High impedance: Sensor impedance 15 kΩ or more for more than 90 seconds when ECM presumes sensor to being warmed up and operating normally (2 trip detection logic)	• Open in HO2 sensor (bank 1, 2 sensor 2) circuit • HO2 sensor (bank 1, 2 sensor 2) • HO2 sensor heater (bank 1, 2 sensor 2) • EFI relay • Gas leakage from exhaust system
P0138 P0158	• High voltage (short): During active air-fuel ratio control, following conditions (a) and (b) met for certain period of time (2 trip detection logic) (a) HO2 sensor voltage output 0.59 V or more (b) Target air-fuel ratio lean • Extremely high voltage (short): HO2 sensor voltage output exceeds 1.2 V for more than 10 seconds (2 trip detection logic)	• Short in HO2 sensor (bank 1, 2 sensor 2) circuit • HO2 sensor (bank 1, 2 sensor 2) • ECM internal circuit malfunction

MONITOR DESCRIPTION

1. **Active Air-Fuel Ratio Control**
   The ECM usually performs air-fuel ratio feedback control so that the Air-Fuel Ratio (A/F) sensor output indicates a near stoichiometric air-fuel level. This vehicle includes active air-fuel ratio control in addition to regular air-fuel ratio control. The ECM performs active air-fuel ratio control to detect any deterioration in the Three-Way Catalytic Converter (TWC) and Heated Oxygen (HO2) sensor malfunctions (refer to the diagram below).
   Active air-fuel ratio control is performed for approximately 15 to 20 seconds while driving with a warm engine. During active air-fuel ratio control, the air-fuel ratio is forcibly regulated to become lean or rich by the ECM. If the ECM detects a malfunction, one of the following DTCs is set: DTC P0136 or P0156 (abnormal voltage output), P0137 or P0157 (open circuit) or P0138 or P0158 (short circuit).
2. **Abnormal Voltage Output of HO2 Sensor (DTCs P0136 and P0156)**
   While the ECM is performing active air-fuel ratio control, the air-fuel ratio is forcibly regulated to become rich or lean. If the sensor is not functioning properly, the voltage output variation is small. For example, when the HO2 sensor voltage does not decrease to less than 0.21 V and does not increase to more than 0.59 V during active air-fuel ratio control, the ECM determines that the sensor voltage output is abnormal and sets DTCs P0136 and P0156.

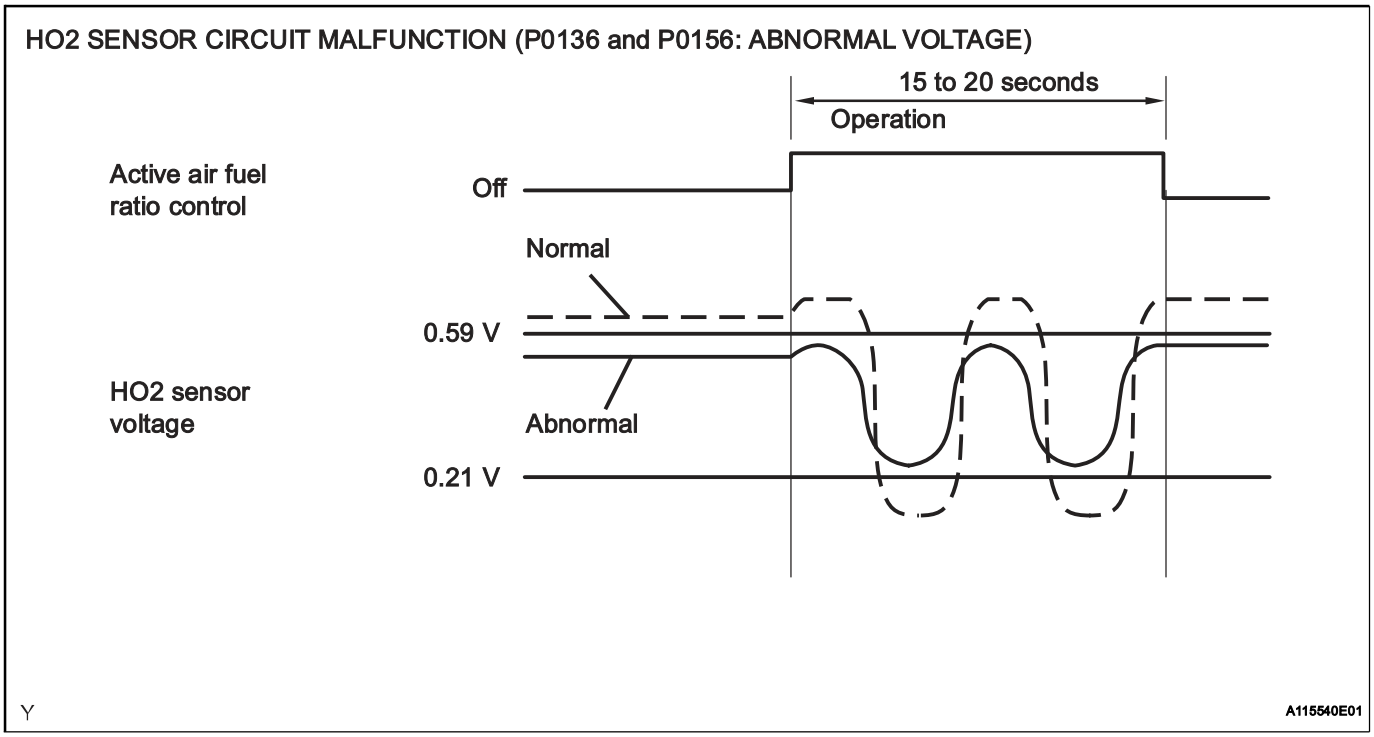

3. **Open or Short in Heated Oxygen (HO2) Sensor Circuit (DTCs P0137 and P0157 or P0138 and P0158)**
   During active air-fuel ratio control, the ECM calculates the Oxygen Storage Capacity (OSC)* of the Three-Way Catalytic Converter (TWC) by forcibly regulating the air-fuel ratio to become rich or lean. If the HO2 sensor has an open or short, or the voltage output of the sensor noticeably decreases, the OSC indicates an extraordinarily high value. Even if the ECM attempts to continue regulating the air-fuel ratio to become rich or lean, the HO2 sensor output does not change.
   While performing active air-fuel ratio control, when the target air-fuel ratio is rich and the HO2 sensor voltage output is 0.21 V or less (lean), the ECM interprets this as an abnormally low sensor output voltage and sets DTC P0137 or P0157. When the target air-fuel ratio is lean and the voltage output is 0.59 V or more (rich) during active air-fuel ratio control, the ECM determines that the sensor voltage output is abnormally high, and sets DTC P0138 or P0158.
   HINT:
   DTC P0138 or P0158 is also set if the HO2 sensor voltage output is more than 1.2 V for 10 seconds or more.

*: The TWC has the capability to store oxygen. The OSC and the emission purification capacity of the TWC are mutually related. The ECM determines whether the catalyst has deteriorated, based on the calculated OSC value (See page ES-210).

HO2 SENSOR CIRCUIT LOW VOLTAGE (P0137 and P0157: OPEN)

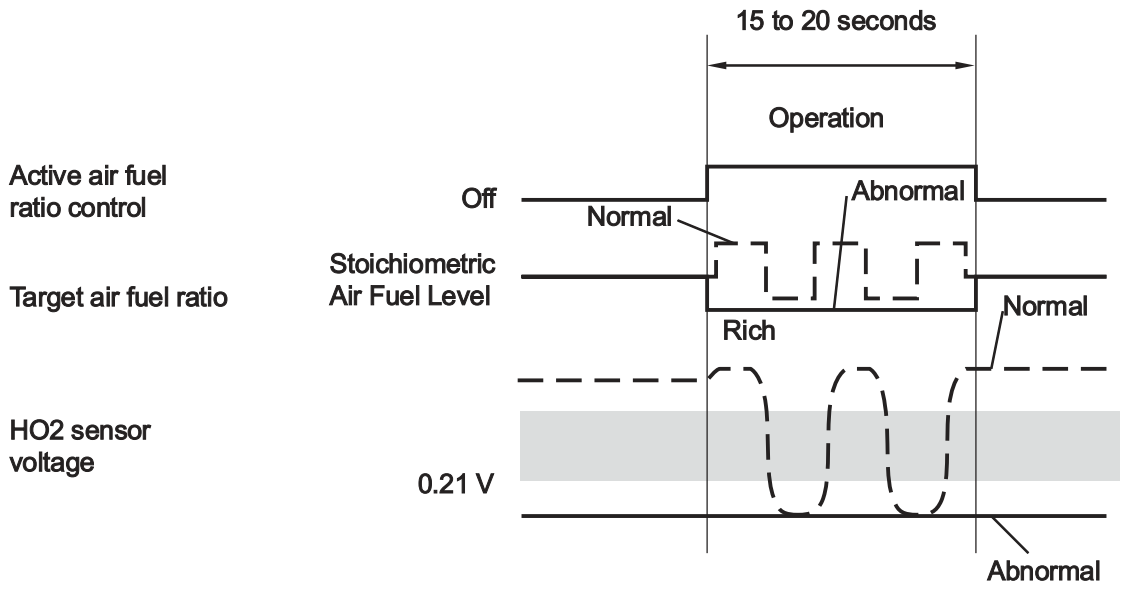

HO2 SENSOR CIRCUIT HIGH VOLTAGE (P0138 and P0158: SHORT)

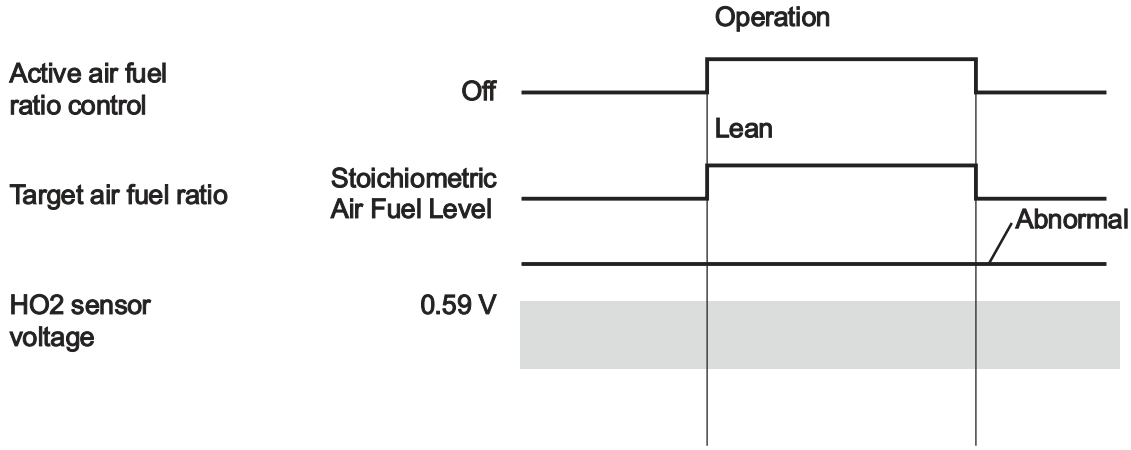

Y

A115541E01

Relationship between element temperature and impedance:

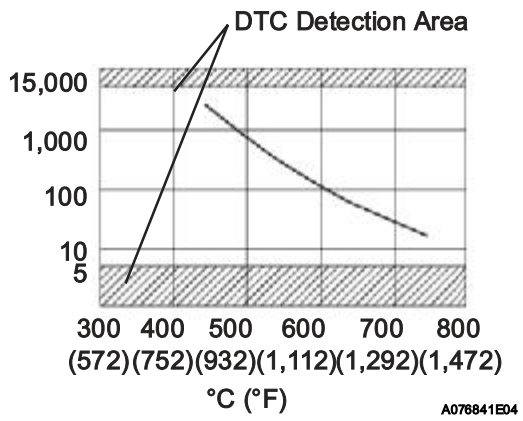

4. High or Low Impedance of Heated Oxygen (HO2) Sensor (DTCs P0136 and P0156 or P0137 and P0157)

During normal air-fuel ratio feedback control, there are small variations in the exhaust gas oxygen concentration. In order to continuously monitor the slight variation of the HO2 sensor signal while the engine is running, the impedance* of the sensor is measured by the ECM. The ECM determines that there is a malfunction in the sensor when the measured impedance deviates from the standard range.

*: The effective resistance in an alternating current electrical circuit.

HINT:

- The impedance cannot be measured using an ohmmeter.
- DTCs P0136 and P0156 indicate the deterioration of the HO2 sensor. The ECM sets the DTCs by calculating the impedance of the sensor when the typical enabling conditions are satisfied (2 driving cycle).
- DTCs P0137 and P0157 indicate an open or short circuit in the HO2 sensor (2 driving cycle). The ECM sets the DTCs when the impedance of the sensor exceeds the threshold 15 kΩ.

MONITOR STRATEGY

Related DTCs	P0136: Heated oxygen sensor output voltage (Output voltage) (bank 1) P0136: Heated oxygen sensor impedance (Low) (bank 1) P0137: Heated oxygen sensor output voltage (Low voltage) (bank 1) P0137: Heated oxygen sensor impedance (High) (bank 1) P0138: Heated oxygen sensor output voltage (High voltage) (bank 1) P0138: Heated oxygen sensor output voltage (Extremely high) (bank 1) P0156: Heated oxygen sensor output voltage (Output voltage) (bank 2) P0156: Heated oxygen sensor impedance (Low) (bank 2) P0157: Heated oxygen sensor output voltage (Low voltage) (bank 2) P0157: Heated oxygen sensor impedance (High) (bank 2) P0158: Heated oxygen sensor output voltage (High voltage) (bank 2) P0158: Heated oxygen sensor impedance (Extremely high) (bank 2)
Required Sensors/Components (Main)	Heated oxygen sensor
Required Sensors/Components (Related)	Crankshaft position sensor, engine coolant temperature sensor, mass air flow meter and throttle position sensor
Frequency of Operation	Once per driving cycle: Active air-fuel ratio control detection Continuous: Others
Duration	20 seconds: Heated oxygen sensor output (Output voltage, High voltage, Low voltage) 30 seconds: Heated oxygen sensor impedance (Low) 90 seconds: Heated oxygen sensor impedance (High) 10 seconds: Heated oxygen sensor voltage (Extremely high)
MIL Operation	2 driving cycles
Sequence of Operation	None

TYPICAL ENABLING CONDITIONS

All:

Monitor runs whenever following DTCs not present	P0031, P0032, P0051, P0052 (A/F sensor heater - Sensor 1) P0037, P0038, P0057, P0058 (O2 sensor heater - Sensor 2) P0100 - P0103 (MAF meter) P0110 - P0113 (IAT sensor) P0115 - P0118 (ECT sensor) P0120 - P0223, P2135 (TP sensor) P0125 (Insufficient ECT for closed loop) P0171, P0172, P0174, P0175 (Fuel system) P0300 - P0306 (Misfire) P0335 (CKP sensor) P0340 (CMP sensor) P0455, P0456 (EVAP System) P0500 (VSS) P2196, P2198 (A/F sensor - rationality) P2A00, P2A03 (A/F sensor - slow response)

Heated Oxygen Sensor Output Voltage (Output Voltage, High Voltage and Low Voltage):

Active air-fuel ratio control	Executing
Active air-fuel ratio control begins when all of following conditions met:	-
Battery voltage	11 V or more
Engine coolant temperature	75 °C (167°F) or more
Idling	OFF
Engine RPM	Less than 3,200 rpm
A/F sensor status	Activated
Fuel system status	Closed loop
Fuel cut	OFF
Engine load	10 to 70 %
Shift position	4 th or more

Heated Oxygen Sensor Impedance (Low):

Battery voltage	11 V or more
Estimated sensor temperature	Less than 700°C (1,292°F)
ECM monitor	Completed
DTC P0606	Not set

Heated Oxygen Sensor Impedance (High):

Battery voltage	11 V or more
Estimated sensor temperature	520°C to 750°C (968°F to 1,382°F)
ECM monitor	Completed
DTC P0606	Not set

Heated Oxygen Sensor Output Voltage (Extremely High):

Battery voltage	11 V or more
Time after engine start	2 seconds or more

TYPICAL MALFUNCTION THRESHOLDS

Heated Oxygen Sensor Output Voltage (Output voltage):

Either of following conditions met:	1 or 2
1. All of following conditions (a), (b) and (c) met	-
(a) Commanded air-fuel ratio	14.3 or less
(b) Rear HO2 sensor voltage	0.21 to 0.59 V
(c) OSC (Oxygen Storage Capacity of Catalyst)	2.5 g or more
2. All of following conditions (d), (e) and (f) met	-

(d) Commanded air-fuel ratio	14.9 or more
(e) Rear HO2 sensor voltage	0.21 to 0.59 V
(f) OSC	2.5 g or more

Heated Oxygen Sensor Output Voltage (Low output voltage):

All of following conditions (a), (b) and (c) met	-
(a) Commanded air-fuel ratio	14.3 or less
(b) Rear HO2 sensor voltage	Less than 0.21 V
(c) OSC (Oxygen Storage Capacity of Catalyst)	2.5 g or more

Heated Oxygen Sensor Output Voltage (High output voltage):

All of following conditions (a), (b) and (c) met	-
(a) Commanded air-fuel ratio	14.9 or more
(b) Rear HO2 sensor voltage	More than 0.59 V
(c) OSC (Oxygen Storage Capacity of Catalyst)	2.5 g or more

Heated Oxygen Sensor Impedance (Low):

Duration of following condition met	30 seconds or more
Heated oxygen sensor impedance	Less than 5 Ω

Heated Oxygen Sensor Impedance (High):

Duration of following condition met	90 seconds or more
Heated oxygen sensor impedance	15 kΩ or more

Heated Oxygen Sensor Output Voltage (Extremely High):

Duration of following condition met	10 seconds or more
Heated oxygen sensor voltage	1.2 V or more

COMPONENT OPERATING RANGE

Duration of following condition met	30 seconds or more
Heated oxygen sensor voltage	Varies between 0.1 V and 0.9 V

MONITOR RESULT

Refer to CHECKING MONITOR STATUS (See page ES-20).

WIRING DIAGRAM

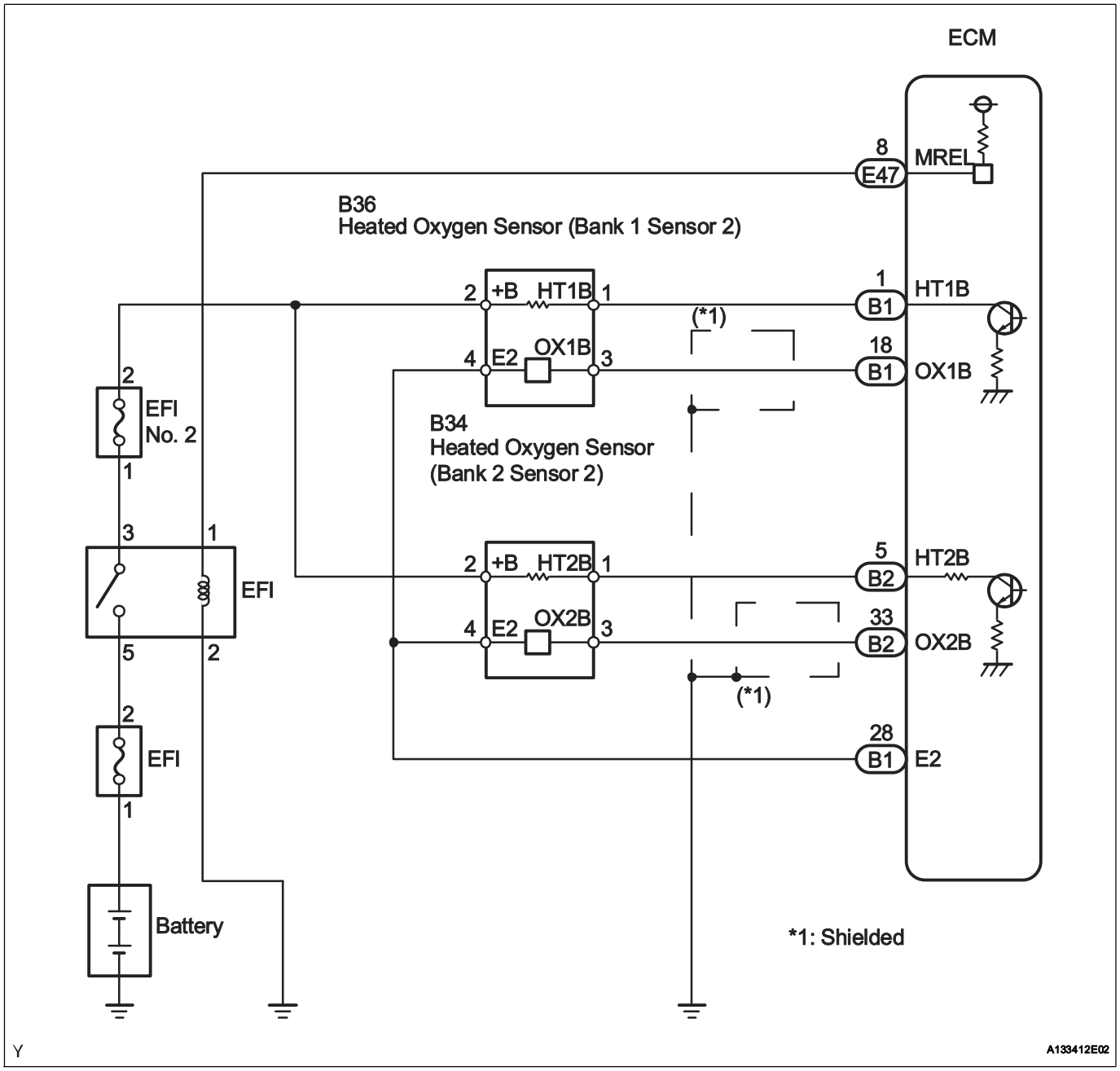

CONFIRMATION DRIVING PATTERN

HINT:

- This confirmation driving pattern is used in the "PERFORM CONFIRMATION DRIVING PATTERN" procedure of the following diagnostic troubleshooting procedure.
- Performing this confirmation driving pattern will activate the Heated Oxygen (HO2) sensor monitor. (The catalyst monitor is performed simultaneously.) This is very useful for verifying the completion of a repair.

NOTICE:

This test will not be completed if the vehicle is driven under absolutely constant speed conditions such as with cruise control activated.

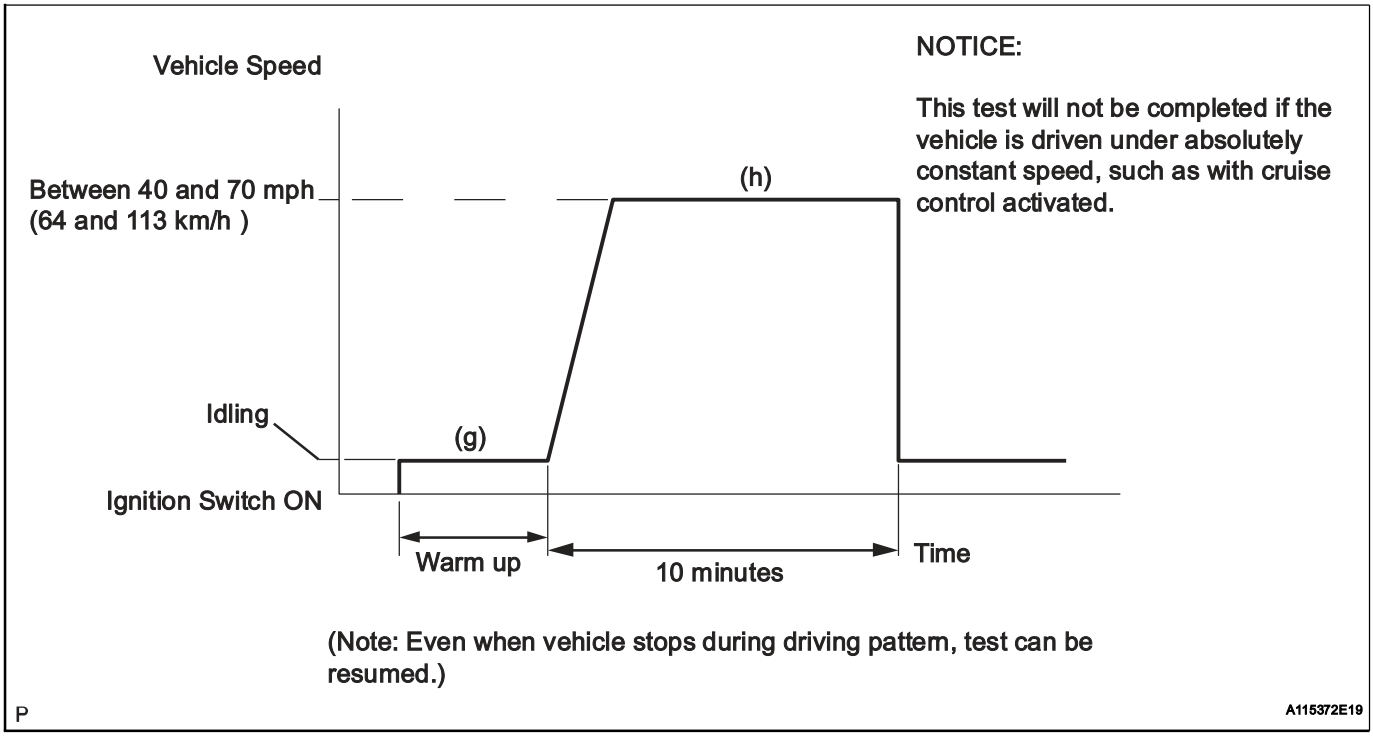

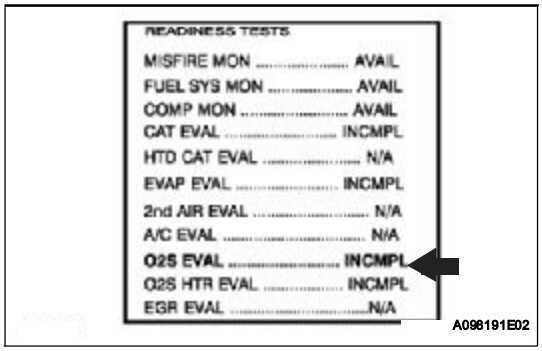

(a) Connect an intelligent tester to the DLC3.
(b) Turn the ignition switch ON.
(c) Turn the tester ON.
(d) Clear DTCs (See page ES-38).
(e) Select the following menu items: DIAGNOSIS / CARB OBD II / READINESS TESTS.
(f) Check that O2S EVAL is INCMPL (incomplete).
(g) Start the engine and warm it up.
(h) Drive the vehicle at between 40 mph and 70 mph (64 km/h and 113 km/h) for at least 10 minutes.
(i) Note the state of the Readiness Tests items. Those items will change to COMPL (complete) as O2S EVAL monitor operates.
(j) Select the following menu items: DIAGNOSIS / ENHANCED OBD II / DTC INFO / PENDING CODES and check if any DTCs (any pending DTCs) are set.
HINT:
If O2S EVAL does not change to COMPL, and any pending DTCs fail to set, extend the driving time.

INSPECTION PROCEDURE

HINT:
Intelligent tester only:
Malfunctioning areas can be identified by performing the A/F CONTROL function provided in the ACTIVE TEST. The A/F CONTROL function can help to determine whether the Air-Fuel Ratio (A/F) sensor, Heated Oxygen (HO2) sensor and other potential trouble areas are malfunctioning.

The following instructions describe how to conduct the A/F CONTROL operation using an intelligent tester.
(1) Connect an intelligent tester to the DLC3.
(2) Start the engine and turn the tester ON.
(3) Warm up the engine at an engine speed of 2,500 rpm for approximately 90 seconds.
(4) Select the following menu items: DIAGNOSIS / ENHANCED OBD II / ACTIVE TEST / A/F CONTROL.
(5) Perform the A/F CONTROL operation with the engine in an idling condition (press the RIGHT or LEFT button to change the fuel injection volume).
(6) Monitor the voltage outputs of the A/F and HO2 sensors (AFS B1S1 and O2S B1S2 or AFS B2S1 and O2S B2S2) displayed on the tester.
HINT:
- The A/F CONTROL operation lowers the fuel injection volume by 12.5 % or increases the injection volume by 25 %.
- Each sensor reacts in accordance with increases and decreases in the fuel injection volume.

Standard

Tester Display (Sensor)	Injection Volumes	Status	Voltages
AFS B1S1 or AFS B2S1 (A/F)	+25 %	Rich	Less than 3.0
AFS B1S1 or AFS B2S1 (A/F)	-12.5 %	Lean	More than 3.35
O2S B1S2 or O2S B2S2 (HO2)	+25 %	Rich	More than 0.55
O2S B1S2 or O2S B2S2 (HO2)	-12.5 %	Lean	Less than 0.4

NOTICE:
The Air-Fuel Ratio (A/F) sensor has an output delay of a few seconds and the Heated Oxygen (HO2) sensor has a maximum output delay of approximately 20 seconds.

Case	A/F Sensor (Sensor 1) Output Voltage		HO2 Sensor (Sensor 2) Output Voltage		Main Suspected Trouble Areas
1	Injection Volume +25 % -12.5 %		Injection Volume +25 % -12.5 %		-
	Output Voltage More than 3.35 V Less than 3.0 V		Output Voltage More than 0.55 V Less than 0.4 V		
2	Injection Volume +25 % -12.5 %		Injection Volume +25 % -12.5 %		• A/F sensor • A/F sensor heater • A/F sensor circuit
	Output Voltage Almost no reaction		Output Voltage More than 0.55 V Less than 0.4 V		
3	Injection Volume +25 % -12.5 %		Injection Volume +25 % -12.5 %		• HO2 sensor • HO2 sensor heater • HO2 sensor circuit
	Output Voltage More than 3.35 V Less than 3.0 V		Output Voltage Almost no reaction		

Case	A/F Sensor (Sensor 1) Output Voltage		HO2 Sensor (Sensor 2) Output Voltage		Main Suspected Trouble Areas
4	Injection volume +25 % -12.5 %		Injection Volume +25 % -12.5 %		• Injector • Fuel pressure • Gas leakage from exhaust system (Air-fuel ratio extremely lean or rich)
	Output Voltage Almost no reaction	NG	Output Voltage Almost no reaction	NG	

- Following the A/F CONTROL procedure enables technicians to check and graph the voltage outputs of both the A/F and HO2 sensors.
- To display the graph, select the following menu items on the tester: DIAGNOSIS / ENHANCED OBD II / ACTIVE TEST / A/F CONTROL / USER DATA / AFS B1S1 and O2S B1S2 or AFS B2S1 and O2S B2S2, and press the YES button and then the ENTER button followed by the F4 button.

ES

HINT:
- If other DTCs relating to different systems that have terminal E2 as the ground terminal are output simultaneously, terminal E2 may have an open circuit.
- Read freeze frame data using an intelligent tester. Freeze frame data record the engine condition when malfunctions are detected. When troubleshooting, freeze frame data can help determine if the vehicle was moving or stationary, if the engine was warmed up or not, if the air-fuel ratio was lean or rich, and other data, from the time the malfunction occurred.
- If the OX1B wire from the ECM connector is short-circuited to the +B wire, DTC P0136 will be set.
- If the OX2B wire from the ECM connector is short-circuited to the +B wire, DTC P0156 will be set.

1 READ OUTPUT DTCS

(a) Connect an intelligent tester to the DLC3.
(b) Turn the ignition switch ON and turn the tester ON.
(c) Select the following menu items: DIAGNOSIS / ENHANCED OBD II / DTC INFO / CURRENT CODES.
(d) Read DTCs.

Result

Display (DTC Output)	Proceed To
P0138 or P0158	A
P0137 or P0157	B
P0136 or P0156	C

B → **Go to step 14**

C → **Go to step 7**

A

2 READ VALUE USING INTELLIGENT TESTER (OUTPUT VOLTAGE OF HEATED OXYGEN SENSOR)

(a) Connect an intelligent tester to the DLC3.
(b) Turn the ignition switch ON and turn the tester ON.
(c) Select the following menu items: DIAGNOSIS / ENHANCED OBD II / DATA LIST / PRIMARY / O2S B1S2 or O2S B2S2.
(d) Allow the engine to idle.

(e) Read the Heated Oxygen (HO2) sensor output voltage while idling.

Result

HO2 Sensor Output Voltages	Proceed To
More than 1.2 V	A
Less than 1.0 V	B

B → **Go to step 5**

A

3 CHECK HARNESS AND CONNECTOR (CHECK FOR SHORT)

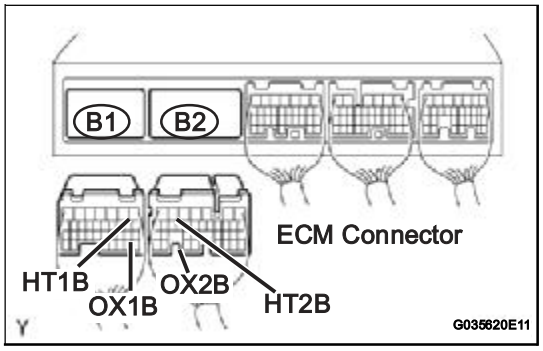

(a) Turn the ignition switch OFF and wait for 5 minutes.
(b) Disconnect the B1 or B2 ECM connector.
(c) Check the resistance.

Standard Resistance

Tester Connections	Specified Conditions
HT1B (B1-1) - OX1B (B1-18)	10 kΩ or higher
HT2B (B2-5) - OX2B (B2-33)	

(d) Reconnect the ECM connector.

NG → **Go to step 4**

OK

REPLACE ECM (See page ES-446)

4 INSPECT HEATED OXYGEN SENSOR (CHECK FOR SHORT)

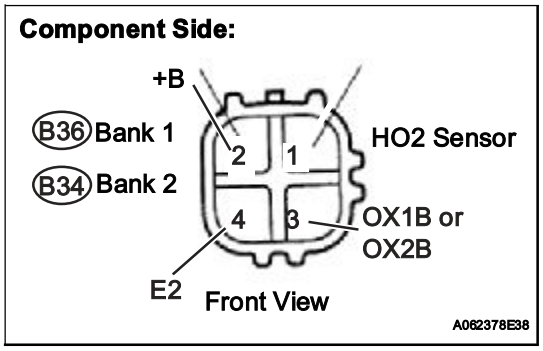

(a) Disconnect the B34 or B36 HO2 sensor connector.
(b) Check the resistance.

Standard Resistance

Tester Connections	Specified Conditions
+B (2) - E2 (4)	10 kΩ or higher
+B (2) - OX1B or OX2B (3)	

(c) Reconnect the HO2 sensor connector.

NG → **REPLACE HEATED OXYGEN SENSOR (See page EC-24)**

OK

REPAIR OR REPLACE HARNESS OR CONNECTOR

5	PERFORM CONFIRMATION DRIVING PATTERN

NEXT

6	CHECK WHETHER DTC OUTPUT RECURS (DTC P0138 OR P0158)

(a) Connect an intelligent tester to the DLC3.
(b) Turn the ignition switch ON and turn the tester ON.
(c) Select the following menu items: DIAGNOSIS / ENHANCED OBD II / DTC INFO / CURRENT CODES.
(d) Read DTCs.

ES

Result

Display (DTC Output)	Proceed To
P0138 or P0158	A
No output	B

B → CHECK FOR INTERMITTENT PROBLEMS

A

REPLACE HEATED OXYGEN SENSOR (See page EC-24)

7	READ VALUE USING INTELLIGENT TESTER (OUTPUT VOLTAGE OF HEATED OXYGEN SENSOR)

(a) Connect an intelligent tester to the DLC3.
(b) Turn the ignition switch ON and turn the tester ON.
(c) Start the engine.
(d) Select the following menu items: DIAGNOSIS / ENHANCED OBD II / DATA LIST / PRIMARY / O2S B1S2 or O2S B2S2.
(e) After warming up the engine, run the engine at an engine speed of 2,500 rpm for 3 minutes.
(f) Read the output voltage of the HO2 sensor when the engine rpm is suddenly increased.
HINT:
Quickly accelerate the engine to 4,000 rpm 3 times using the accelerator pedal.
Standard:
Fluctuates between 0.4 V or less and 0.5 V or more.

NG → Go to step 14

OK

8	PERFORM CONFIRMATION DRIVING PATTERN

NEXT

9	CHECK WHETHER DTC OUTPUT RECURS (DTC P0136 OR P0156)

(a) Connect an intelligent tester to the DLC3.
(b) Turn the ignition switch ON and turn the tester ON.
(c) Select the following menu items: DIAGNOSIS / ENHANCED OBD II / DTC INFO / CURRENT CODES.
(d) Read DTCs.

Result

Display (DTC Output)	Proceed To
P0136 or P0156	A
No output	B

B → CHECK FOR INTERMITTENT PROBLEMS

A

10	REPLACE HEATED OXYGEN SENSOR

Replace the heated oxygen sensor (See page EC-24).

NEXT

11	PERFORM CONFIRMATION DRIVING PATTERN

NEXT

12	CHECK WHETHER DTC OUTPUT RECURS (DTC P0136 OR P0156)

(a) Connect an intelligent tester to the DLC3.
(b) Turn the ignition switch ON and turn the tester ON.
(c) Select the following menu items: DIAGNOSIS / ENHANCED OBD II / DTC INFO / CURRENT CODES.
(d) Read DTCs.

Result

Display (DTC Output)	Proceed To
P0136 or P0156	A
No output	B

B → REPAIR COMPLETED

A

13	PERFORM ACTIVE TEST USING INTELLIGENT TESTER (INJECTION VOLUME)

(a) Connect an intelligent tester to the DLC3.
(b) Start the engine and turn the tester ON.
(c) Warm up the engine.
(d) Select the following menu items: DIAGNOSIS / ENHANCED OBD II / ACTIVE TEST / INJ VOL.
(e) Change the fuel injection volume using the tester, monitoring the voltage output of Air-Fuel Ratio (A/F) and HO2 sensors displayed on the tester.
HINT:
- Change the fuel injection volume within the range of -12 % and +12 %. The injection volume can be changed in 1 % graduations within the range.
- The A/F sensor is displayed as AFS B1S1 or AFS B2S1, and the HO2 sensor is displayed as O2S B1S2 or O2S B2S2, on intelligent testers.

Result

Tester Display (Sensor)	Voltage Variations	Proceed To
AFS B1S1 (A/F) AFS B2S1 (A/F)	Alternates between more and less than 3.3 V	OK
AFS B1S1 (A/F) AFS B2S1 (A/F)	Remains at more than 3.3 V	NG
AFS B1S1 (A/F) AFS B2S1 (A/F)	Remains at less than 3.3 V	NG

HINT:
A normal HO2 sensor voltage (O2S B1S2 or O2S B2S2) reacts in accordance with increases and decreases in fuel injection volumes. When the A/F sensor voltage remains at either less or more than 3.3 V despite the HO2 sensor indicating a normal reaction, the A/F sensor is malfunctioning.

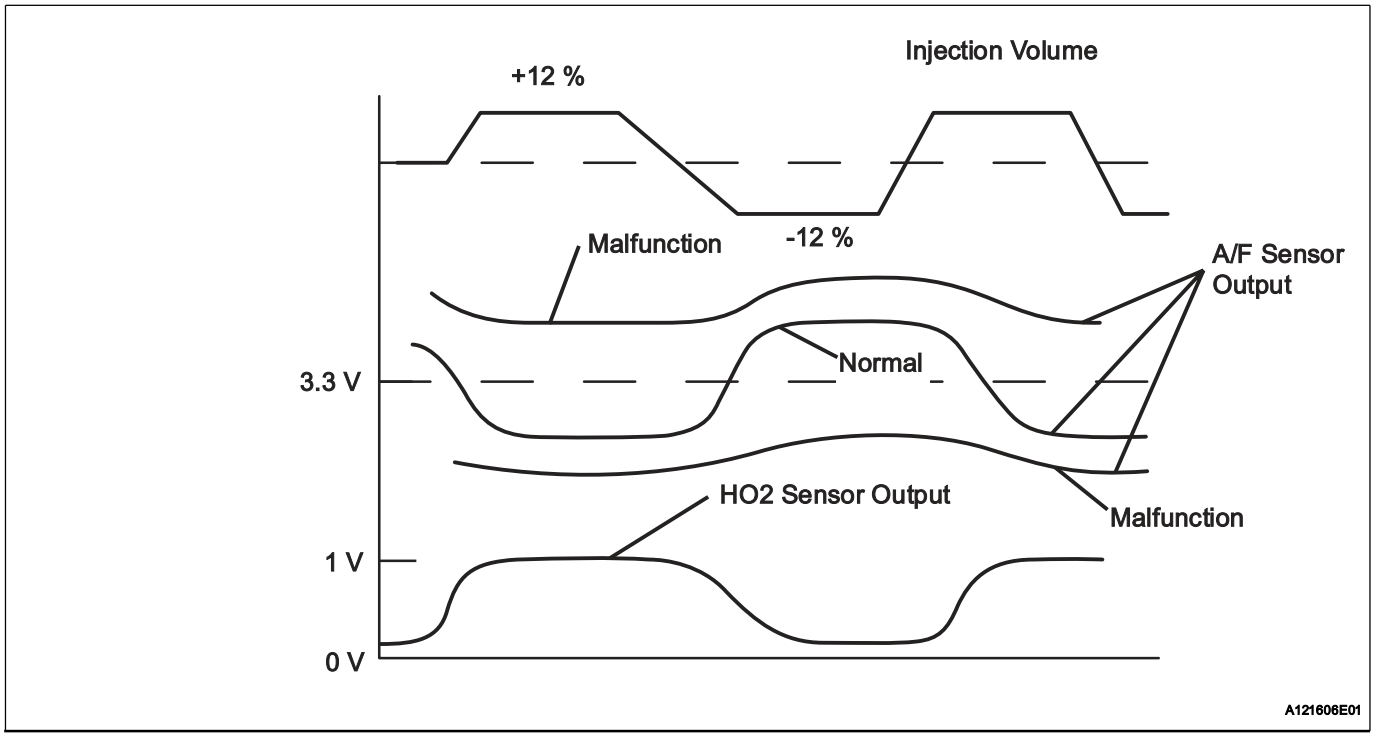

NG → **REPLACE AIR FUEL RATIO SENSOR (See page EC-21)**

OK

CHECK AND REPAIR EXTREMELY RICH OR LEAN ACTUAL AIR FUEL RATIO (INJECTOR, FUEL PRESSURE, GAS LEAKAGE FROM EXHAUST SYSTEM, ETC.)

14	CHECK EXHAUST GAS LEAKAGE

OK:
No gas leakage.

NG → **REPAIR OR REPLACE EXHAUST GAS LEAKAGE POINT**

OK

15 INSPECT HEATED OXYGEN SENSOR (HEATER RESISTANCE)

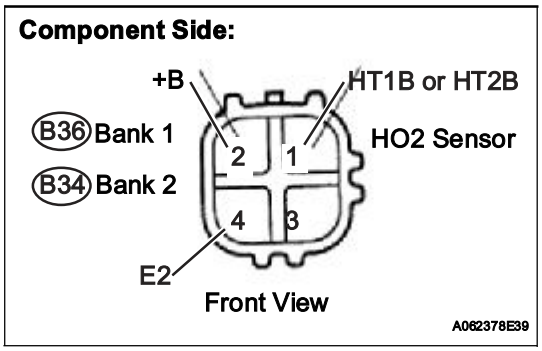

(a) Disconnect the B34 or B36 HO2 sensor connector.
(b) Measure the resistance between the terminals of the HO2 sensor connector.

Standard Resistance

Tester Connections	Specified Conditions
HT1B or HT2B (1) - +B (2)	11 to 16 Ω at 20°C (68°F)
HT1B or HT2B (1) - E2 (4)	10 kΩ or higher

(c) Reconnect the HO2 sensor connector.

NG → **REPLACE HEATED OXYGEN SENSOR (See page EC-24)**

OK

16 INSPECT EFI RELAY

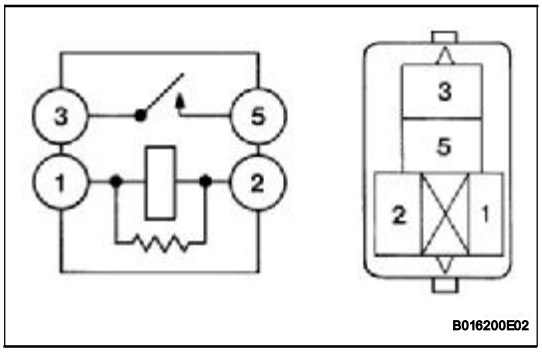

(a) Remove the EFI relay from the engine room R/B.
(b) Check the EFI relay resistance.

Standard Resistance

Terminal Connections	Specified Conditions
3 - 5	10 kΩ or higher
	Below 1 Ω (when battery voltage applied to terminals 1 and 2)

(c) Reinstall the EFI relay.

NG → **REPLACE EFI RELAY**

OK

17	CHECK HARNESS AND CONNECTOR (HEATED OXYGEN SENSOR - ECM)

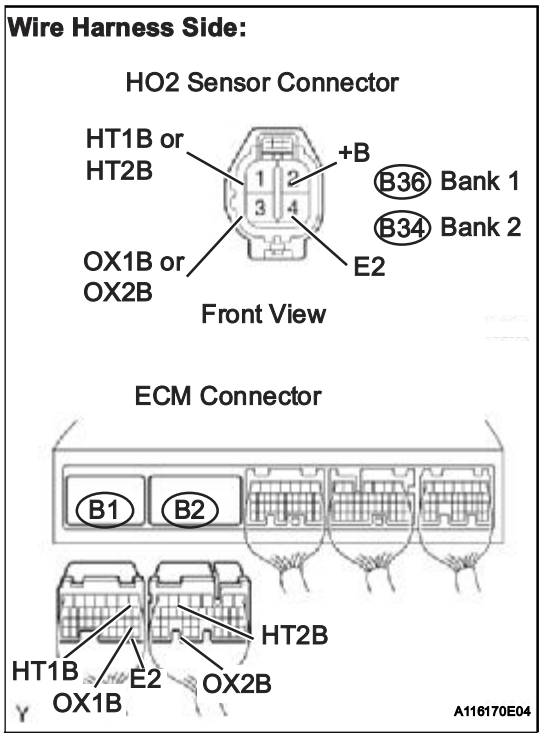

(a) Disconnect the B34 or B36 HO2 sensor connector.
(b) Turn the ignition switch ON.
(c) Measure the voltage between the +B terminal of the HO2 sensor connector and body ground.

Standard Voltage

Terminal Connections	Specified Conditions
+B (B36-2) - Body ground	11 to 14 V
+B (B34-2) - Body ground	

(d) Turn the ignition switch OFF.
(e) Disconnect the B1 and B2 ECM connectors.
(f) Check the resistance.

Standard Resistance (Check for open)

Terminal Connections	Specified Conditions
HT1B (B36-1) - HT1B (B1-1)	Below 1 Ω
OX1B (B36-3) - OX1B (B1-18)	
E2 (B36-4) - E2 (B1-28)	
HT2B (B34-1) - HT2B (B2-5)	
OX2B (B34-3) - OX2B (B2-33)	
E2 (B34-4) - E2 (B1-28)	

Standard Resistance (Check for short)

Terminal Connections	Specified Conditions
HT1B (B36-1) or HT1B (B1-1) - Body ground	10 kΩ or higher
OX1B (B36-3) or OX1B (B1-18) - Body ground	
HT2B (B34-1) or HT2B (B2-5) - Body ground	
OX2B (B34-3) or OX2B (B2-33) - Body ground	

(g) Reconnect the HO2 sensor connector.
(h) Reconnect the ECM connectors.

ES

Reference (System Diagram of Bank 1 Sensor 2):

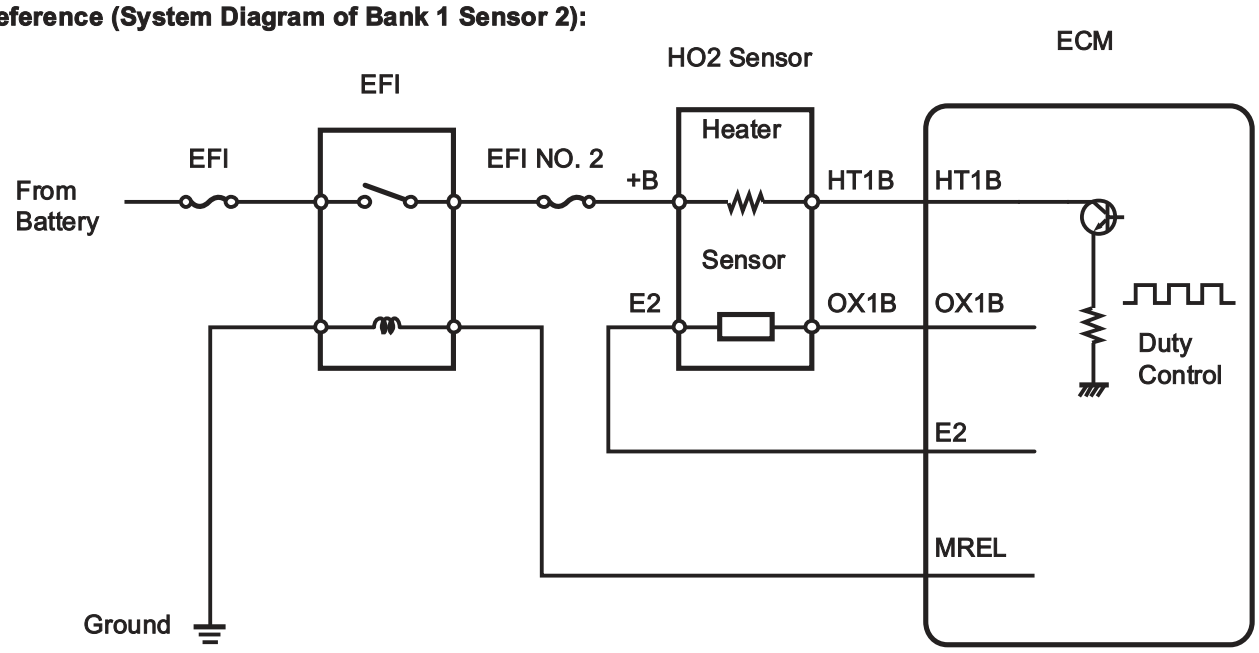

NG → **REPAIR OR REPLACE HARNESS OR CONNECTOR**

OK

REPLACE HEATED OXYGEN SENSOR (See page EC-24)

DTC	P0171	System Too Lean (Bank 1)

DTC	P0172	System Too Rich (Bank 1)

DTC	P0174	System Too Lean (Bank 2)

DTC	P0175	System Too Rich (Bank 2)

DESCRIPTION

The fuel trim is related to the feedback compensation value, not to the basic injection time. The fuel trim consists of both the short-term and long-term fuel trims.

The short-term fuel trim is fuel compensation that is used to constantly maintain the air-fuel ratio at stoichiometric levels. The signal from the Air-Fuel Ratio (A/F) sensor indicates whether the air-fuel ratio is rich or lean compared to the stoichiometric ratio. This triggers a reduction in the fuel injection volume if the air-fuel ratio is rich and an increase in the fuel injection volume if it is lean.

Factors such as individual engine differences, wear over time and changes in operating environment cause short-term fuel trim to vary from the central value. The long-term fuel trim, which controls overall fuel compensation, compensates for long-term deviations in the fuel trim from the central value caused by the short- term fuel trim compensation.

If both the short-term and long-term fuel trims are lean or rich beyond predetermined values, it is interpreted as a malfunction, and the ECM illuminates the MIL and sets a DTC.

DTC No.	DTC Detection Conditions	Trouble Areas
P0171 P0174	With warm engine and stable air-fuel ratio feedback, fuel trim considerably in error to lean side (2 trip detection logic)	• Air induction system • Injector blockage • Mass Air Flow (MAF) meter • Engine Coolant Temperature (ECT) sensor • Fuel pressure • Gas leakage from exhaust system • Open or short in A/F sensor (bank 1, 2 sensor 1) circuit • A/F sensor (bank 1, 2 sensor 1) • A/F sensor heater (bank 1, 2 sensor 1) • A/F sensor heater relay • A/F sensor heater and A/F sensor heater relay circuits • PCV valve and hose • PCV hose connections • ECM
P0172 P0175	With warm engine and stable air-fuel ratio feedback, fuel trim considerably in error to rich side (2 trip detection logic)	• Injector leakage or blockage • MAF meter • ECT sensor • Ignition system • Fuel pressure • Gas leakage from exhaust system • Open or short in A/F sensor (bank 1, 2 sensor 1) circuit • A/F sensor (bank 1, 2 sensor 1) • A/F sensor heater (bank 1, 2 sensor 1) • A/F sensor heater relay • A/F sensor heater and A/F sensor heater relay circuits • ECM

HINT:

- When DTC P0171 or P0174 is set, the actual air-fuel ratio is on the lean side. When DTC P0172 or P0175 is set, the actual air-fuel ratio is on the rich side.
- If the vehicle runs out of fuel, the air-fuel ratio is lean and DTC P0171 or P0174 may be set. The MIL is then illuminated.
- When the total of the short-term and long-term fuel trim values is within the malfunction threshold (and the engine coolant temperature is more than 75°C [167°F]), the system is functioning normally.

MONITOR DESCRIPTION

Under closed-loop fuel control, fuel injection volumes that deviate from those estimated by the ECM cause changes in the long-term fuel trim compensation value. The long-term fuel trim is adjusted when there are persistent deviations in the short-term fuel trim values. Deviations from the ECM's estimated fuel injection volumes also affect the average fuel trim learning value, which is a combination of the average short-term fuel trim (fuel feedback compensation value) and the average long-term fuel trim (learning value of the air- fuel ratio). If the average fuel trim learning value exceeds the malfunction thresholds, the ECM interprets this a fault in the fuel system and sets a DTC.
Example:
The average fuel trim learning value is more than +35 % or less than -35 %, the ECM interprets this as a fuel system malfunction.

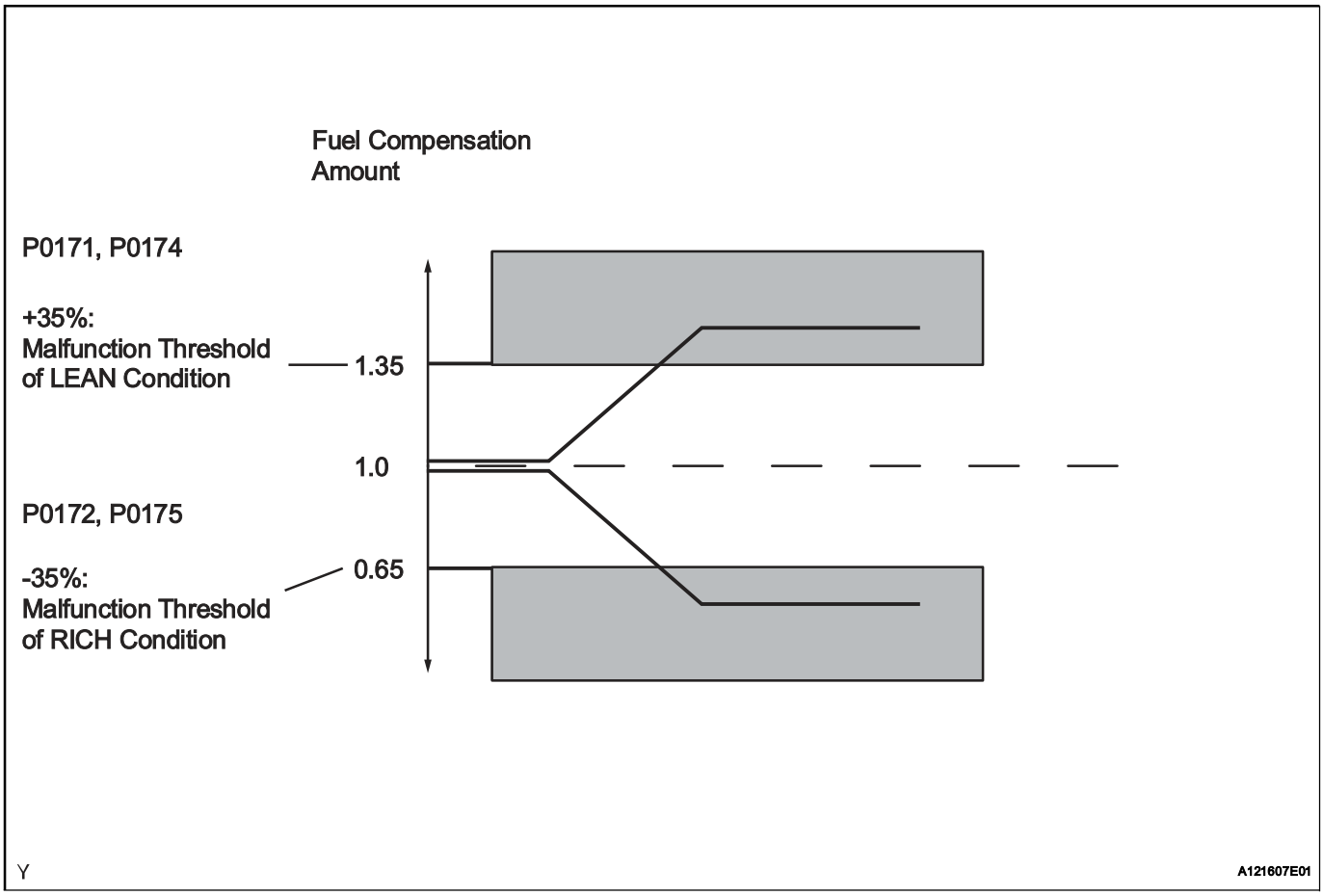

MONITOR STRATEGY

Related DTCs	P0171: Fuel trim Lean (bank 1) P0172: Fuel trim Rich (bank 1) P0174: Fuel trim Lean (bank 2) P0175: Fuel trim Rich (bank 2)
Required Sensors/Components (Main)	Fuel system
Required Sensors/Components (Related)	A/F sensor, Mass air flow meter, Crankshaft position sensor
Frequency of Operation	Continuous
Duration	Within 10 seconds
MIL Operation	2 driving cycles
Sequence of Operation	None

TYPICAL ENABLING CONDITIONS

Fuel-trim:

Monitor runs whenever following DTCs not present	P0010, P0020 (OCV Bank 1, 2) P0011 (VVT System 1 - Advance) P0012 (VVT System 1 - Retard) P0021 (VVT System 2 - Advance) P0022 (VVT System 2 - Retard) P0031, P0032, P0051, P0052 (A/F sensor heater - Sensor 1) P0100 - P0103 (MAF meter) P0115 - P0118 (ECT sensor) P0120 - P0223, P2135 (TP sensor) P0125 (Insufficient ECT for closed loop) P0335 (CKP sensor) P0340 (CMP sensor) P0351 - P0356 (Igniter) P0500 (VSS)
Fuel system status	Closed-loop
Battery voltage	11 V or more
Either of following conditions 1 or 2 set	-
1. Engine RPM	Below 1,100 rpm
2. Intake air amount per revolution	0.22 g/rev or more
Catalyst monitor	No executed

ES

TYPICAL MALFUNCTION THRESHOLDS

Fuel-trim:

Purge-cut	Executing
Either of following conditions 1 or 2 met	-
1. Average between short-term fuel trim and long-term fuel trim	35 % or more (varies with ECT)
2. Average between short-term fuel trim and long-term fuel trim	-35 % or less (varies with ECT)

WIRING DIAGRAM

Refer to DTC P2195 (See page ES-312).

INSPECTION PROCEDURE

HINT:

Intelligent tester only:

Malfunctioning areas can be identified by performing the A/F CONTROL function provided in the ACTIVE TEST. The A/F CONTROL function can help to determine whether the Air-Fuel Ratio (A/F) sensor, Heated Oxygen (HO2) sensor and other potential trouble areas are malfunctioning.

The following instructions describe how to conduct the A/F CONTROL operation using an intelligent tester.

(1) Connect an intelligent tester to the DLC3.

(2) Start the engine and turn the tester ON.

(3) Warm up the engine at an engine speed of 2,500 rpm for approximately 90 seconds.

(4) Select the following menu items: DIAGNOSIS / ENHANCED OBD II / ACTIVE TEST / A/F CONTROL.

(5) Perform the A/F CONTROL operation with the engine in an idling condition (press the RIGHT or LEFT button to change the fuel injection volume).

(6) Monitor the voltage outputs of the A/F and HO2 sensors (AFS B1S1 and O2S B1S2 or AFS B2S1 and O2S B2S2) displayed on the tester.

HINT:

- The A/F CONTROL operation lowers the fuel injection volume by 12.5 % or increases the injection volume by 25 %.

- Each sensor reacts in accordance with increases and decreases in the fuel injection volume.

Standard

Tester Display (Sensor)	Injection Volumes	Status	Voltages
AFS B1S1 or AFS B2S1 (A/F)	+25 %	Rich	Less than 3.0
AFS B1S1 or AFS B2S1 (A/F)	-12.5 %	Lean	More than 3.35
O2S B1S2 or O2S B2S2 (HO2)	+25 %	Rich	More than 0.55
O2S B1S2 or O2S B2S2 (HO2)	-12.5 %	Lean	Less than 0.4

ES

NOTICE:
The Air-Fuel Ratio (A/F) sensor has an output delay of a few seconds and the Heated Oxygen (HO2) sensor has a maximum output delay of approximately 20 seconds.

Case	A/F Sensor (Sensor 1) Output Voltage		HO2 Sensor (Sensor 2) Output Voltage		Main Suspected Trouble Areas
1	Injection volume +25 % -12.5 %		Injection volume +25 % -12.5 %		-
	Output voltage More than 3.35 V Less than 3.0 V	OK	Output voltage More than 0.55 V Less than 0.4 V	OK	
2	Injection volume +25 % -12.5 %		Injection volume +25 % -12.5 %		• A/F sensor • A/F sensor heater • A/F sensor circuit
	Output voltage Almost no reaction	NG	Output voltage More than 0.55 V Less than 0.4 V	OK	
3	Injection volume +25 % -12.5 %		Injection volume +25 % -12.5 %		• HO2 sensor • HO2 sensor heater • HO2 sensor circuit
	Output voltage More than 3.35 V Less than 3.0 V	OK	Output voltage Almost no reaction	NG	
4	Injection volume +25 % -12.5 %		Injection volume +25 % -12.5 %		• Injector • Fuel pressure • Gas leakage from exhaust system (Air-fuel ratio extremely lean or rich)
	Output voltage Almost no reaction	NG	Output voltage Almost no reaction	NG	

- Following the A/F CONTROL procedure enables technicians to check and graph the voltage outputs of both the A/F and HO2 sensors.
- To display the graph, select the following menu items on the tester: DIAGNOSIS / ENHANCED OBD II / ACTIVE TEST / A/F CONTROL / USER DATA / AFS B1S1 and O2S B1S2 or AFS B2S1 and O2S B2S2, and press the YES button and then the ENTER button followed by the F4 button.

HINT:

- Read freeze frame data using an intelligent tester. Freeze frame data record the engine condition when malfunctions are detected. When troubleshooting, freeze frame data can help determine if the vehicle was moving or stationary, if the engine was warmed up or not, if the air-fuel ratio was lean or rich, and other data, from the time the malfunction occurred.

- A low A/F sensor voltage could be caused by a rich air-fuel mixture. Check for conditions that would cause the engine to run rich.
- A high A/F sensor voltage could be caused by a lean air-fuel mixture. Check for conditions that would cause the engine to run lean.

1	CHECK ANY OTHER DTCS OUTPUT (IN ADDITION TO DTC P0171, P0172, P0174 OR P0175)

(a) Connect an intelligent tester to the DLC3.
(b) Turn the ignition switch ON and turn the tester ON.
(c) Select the following menu items: DIAGNOSIS / ENHANCED OBD II / DTC INFO / CURRENT CODES.
(d) Read DTCs.

Result

Display (DTC Output)	Proceed To
P0171, P0172, P0174 or P0175	A
P0171, P0172, P0174 or P0175 and other DTCs	B

HINT:
If any DTCs other than P0171, P0172, P0174 or P0175 are output, troubleshoot those DTCs first.

B → **GO TO DTC CHART (See page ES-57)**

A

2	CHECK PCV HOSE CONNECTIONS

OK:
PCV hose is connected correctly and is not damaged.

NG → **REPAIR OR REPLACE PCV HOSE**

OK

3	CHECK AIR INDUCTION SYSTEM

(a) Check the air induction system for vacuum leakage.
OK:
No leakage from air induction system.

NG → **REPAIR OR REPLACE AIR INDUCTION SYSTEM**

OK

4	PERFORM ACTIVE TEST USING INTELLIGENT TESTER (A/F CONTROL)

(a) Connect an intelligent tester to the DLC3.
(b) Start the engine and turn the tester ON.
(c) Warm up the engine at an engine speed of 2,500 rpm for approximately 90 seconds.
(d) Select the following menu items: DIAGNOSIS / ENHANCED OBD II / ACTIVE TEST / A/F CONTROL

(e) Perform the A/F CONTROL operation with the engine in an idling condition (press the RIGHT or LEFT button to change the fuel injection volume).

(f) Monitor the voltage outputs of A/F and HO2 sensors (AFS B1S1 and O2S B1S2 or AFS B2S1 and O2S B2S2) displayed on the tester.

HINT:

- The A/F CONTROL operation lowers the fuel injection volume by 12.5 % or increases the injection volume by 25 %.
- Each sensor reacts in accordance with increases and decreases in the fuel injection volume.

ES

Standard

Tester Display (Sensor)	Injection Volumes	Status	Voltages
AFS B1S1 or AFS B2S1 (A/F)	+25 %	Rich	Less than 3.0
AFS B1S1 or AFS B2S1 (A/F)	-12.5 %	Lean	More than 3.35
O2S B1S2 or O2S B2S2 (HO2)	+25 %	Rich	More than 0.55
O2S B1S2 or O2S B2S2 (HO2)	-12.5 %	Lean	Less than 0.4

Result:

Status AFS B1S1 or AFS B2S1	Status O2S B1S2 or O2S B2S2	A/F Condition and A/F Sensor Condition	Misfires	Suspected Trouble Areas	Proceed To
Lean/Rich	Lean/Rich	Normal	-	-	C
Lean	Lean	Actual air-fuel ratio lean	May occur	• PCV valve and hose • PCV hose connections • Injector blockage • Gas leakage from exhaust system • Air induction system • Fuel pressure • Mass Air Flow (MAF) meter • Engine Coolant Temperature (ECT) sensor	A
Rich	Rich	Actual air-fuel ratio rich	-	• Injector blockage or blockage • Gas leakage from exhaust system • Ignition system • Fuel pressure • MAF meter • ECT sensor	
Lean	Lean/Rich	A/F sensor malfunction	-	• A/F sensor	B
Rich	Lean/Rich	A/F sensor malfunction	-	• A/F sensor	

Lean: During A/F CONTROL, the A/F sensor output voltage (AFS) is consistently more than 3.35 V, and the HO2 sensor output voltage (O2S) is consistently less than 0.4 V.

Rich: During A/F CONTROL, the AFS is consistently less than 3.0 V, and the O2S is consistently more than 0.55 V.

Lean/Rich: During A/F CONTROL of the ACTIVE TEST, the output voltage of the heated oxygen sensor alternates correctly.

B → **Go to step 11**

C → Go to step 15

A

5	READ VALUE USING INTELLIGENT TESTER (COOLANT TEMP)

(a) Connect an intelligent tester to the DLC3.
(b) Turn the ignition switch ON and turn the tester ON.
(c) Select the following menu items: DIAGNOSIS / ENHANCED OBD II / DATA LIST / PRIMARY / COOLANT TEMP.
(d) Read the COOLANT TEMP twice, when the engine is both cold and warmed up.
Standard:
With cold engine: Same as ambient air temperature.
With warm engine: 80°C to 100°C (176°C to 212°F).

NG → **REPLACE ENGINE COOLANT TEMPERATURE SENSOR (See page ES-424)**

OK

6	READ VALUE USING INTELLIGENT TESTER (MAF)

(a) Connect an intelligent tester to the DLC3.
(b) Turn the ignition switch ON and turn the tester ON.
(c) Select the following menu items: DIAGNOSIS / ENHANCED OBD II / DATA LIST / PRIMARY / MAF and COOLANT TEMP.
(d) Allow the engine to idle until the COOLANT TEMP reaches 75°C (167°F) or more.
(e) Read the MAF with the engine in an idling condition and at an engine speed of 2,500 rpm.
Standard:
MAF while engine idling: 3.2 to 4.7 g/sec (shift position: N, A/C: OFF).
MAF at engine speed of 2,500 rpm: 13.1 to 18.9 g/sec (shift position: N, A/C: OFF).

NG → **REPLACE MASS AIR FLOW METER (See page ES-409)**

OK

7	CHECK FUEL PRESSURE

(a) Check the fuel pressure (See page FU-6).

NG → **REPAIR OR REPLACE FUEL SYSTEM**

OK

8	CHECK EXHAUST GAS LEAKAGE

OK:
No gas leakage.

NG → **REPAIR OR REPLACE EXHAUST SYSTEM**

OK

9	CHECK SPARK AND IGNITION

ES

HINT:
If the spark plugs or ignition system malfunctions, engine misfire may occur. The misfire count can be read using an intelligent tester. Select the following menu items: DIAGNOSIS / ENHANCED OBD II / DATA LIST / PRIMARY / CYL #1 (to CYL #6).

NG → **REPAIR OR REPLACE IGNITION SYSTEM**

OK

10	INSPECT FUEL INJECTOR ASSEMBLY (INJECTION AND VOLUME)

HINT:
If the injectors malfunction, engine misfire may occur. The misfire count can be read using an intelligent tester. Select the following menu items: DIAGNOSIS / ENHANCED OBD II / DATA LIST / PRIMARY / CYL #1 (to CYL #6).

NG → **REPLACE FUEL INJECTOR ASSEMBLY (See page FU-11)**

OK

11	INSPECT AIR FUEL RATIO SENSOR (HEATER RESISTANCE)

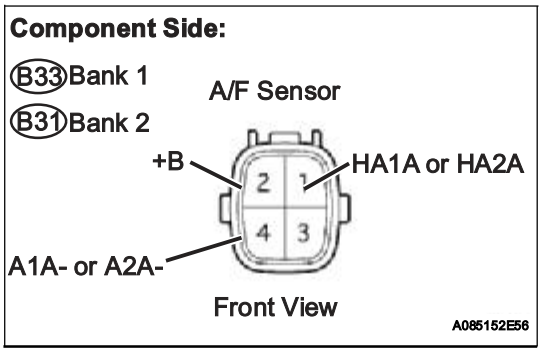

(a) Disconnect the B31 or B33 A/F sensor connector.
(b) Measure the resistance between the terminals of the A/F sensor connector.

Standard Resistance (Bank 1 Sensor 1)

Tester Connections	Specified Conditions
HA1A (1) - +B (2)	1.8 Ω to 3.4 Ω at 20°C (68°F)
HA1A (1) - A1A- (4)	10 kΩ or higher

Standard Resistance (Bank 2 Sensor 1)

Tester Connections	Specified Conditions
HA2A (1) - +B (2)	1.8 Ω to 3.4 Ω at 20°C (68°F)
HA2A (1) - A2A- (4)	10 kΩ or higher

(c) Reconnect the A/F sensor connector.

NG → **REPLACE AIR FUEL RATIO SENSOR (See page EC-21)**

OK

12 INSPECT AIR FUEL RATIO SENSOR HEATER RELAY

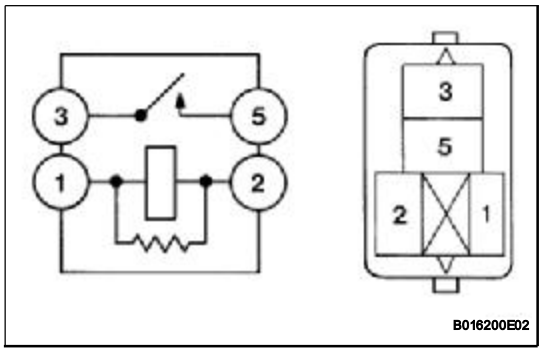

(a) Remove the A/F sensor heater relay from the engine room R/B.

(b) Check the A/F sensor heater relay resistance.

Standard Resistance

Tester Connections	Specified Conditions
3 - 5	10 kΩ or higher
	Below 1 Ω (when battery voltage applied to terminals 1 and 2)

(c) Reinstall the A/F sensor heater relay.

NG → **REPLACE AIR FUEL RATIO SENSOR HEATER RELAY**

OK

13 CHECK HARNESS AND CONNECTOR (A/F SENSOR - ECM)

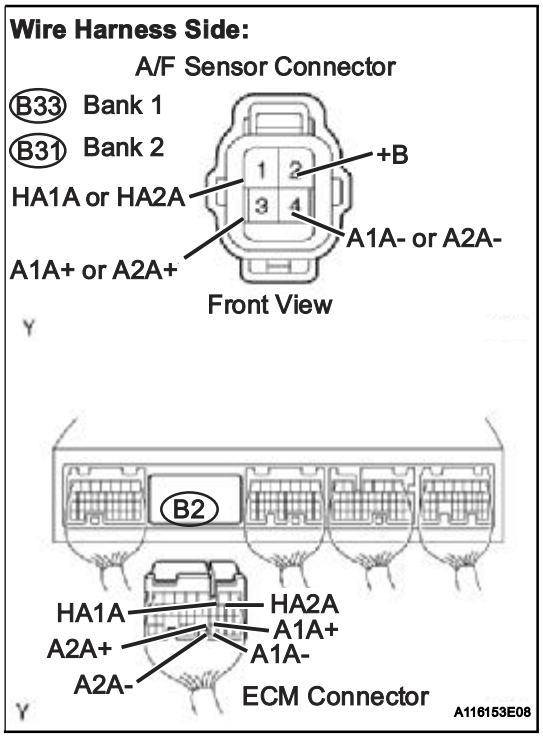

(a) Disconnect the B31 or B33 A/F sensor connector.

(b) Turn the ignition switch ON.

(c) Measure the voltage between the +B terminal of the A/F sensor connector and body ground.

Standard Voltage

Tester Connections	Specified Conditions
+B (B33-2) - Body ground	11 to 14 V
+B (B31-2) - Body ground	

(d) Turn the ignition switch OFF.

(e) Disconnect the B2 ECM connector.

(f) Check the resistance.

Standard Resistance (Check for open)

Tester Connections	Specified Conditions
HA1A (B33-1) - HA1A (B2-2)	Below 1 Ω
A1A+ (B33-3) - A1A+ (B2-22)	
A1A- (B33-4) - A1A- (B2-30)	
HA2A (B31-1) - HA2A (B2-1)	
A2A+ (B31-3) - A2A+ (B2-23)	
A2A- (B31-4) - A2A- (B2-31)	

Standard Resistance (Check for short)

Tester Connections	Specified Conditions
HA1A (B33-1) or HA1A (B2-2) - Body ground	10 kΩ or higher
A1A+ (B33-3) or A1A+ (B2-22) - Body ground	
A1A- (B33-4) or A1A- (B2-30) - Body ground	
HA2A (B31-1) or HA2A (B2-1) - Body ground	
A2A+ (B31-3) or A2A+ (B2-23) - Body ground	
A2A- (B31-4) or A2A- (B2-31) - Body ground	

(g) Reconnect the ECM connector.
(h) Reconnect the A/F sensor connector.

ES

Reference (System Diagram of Bank 1 Sensor 1):

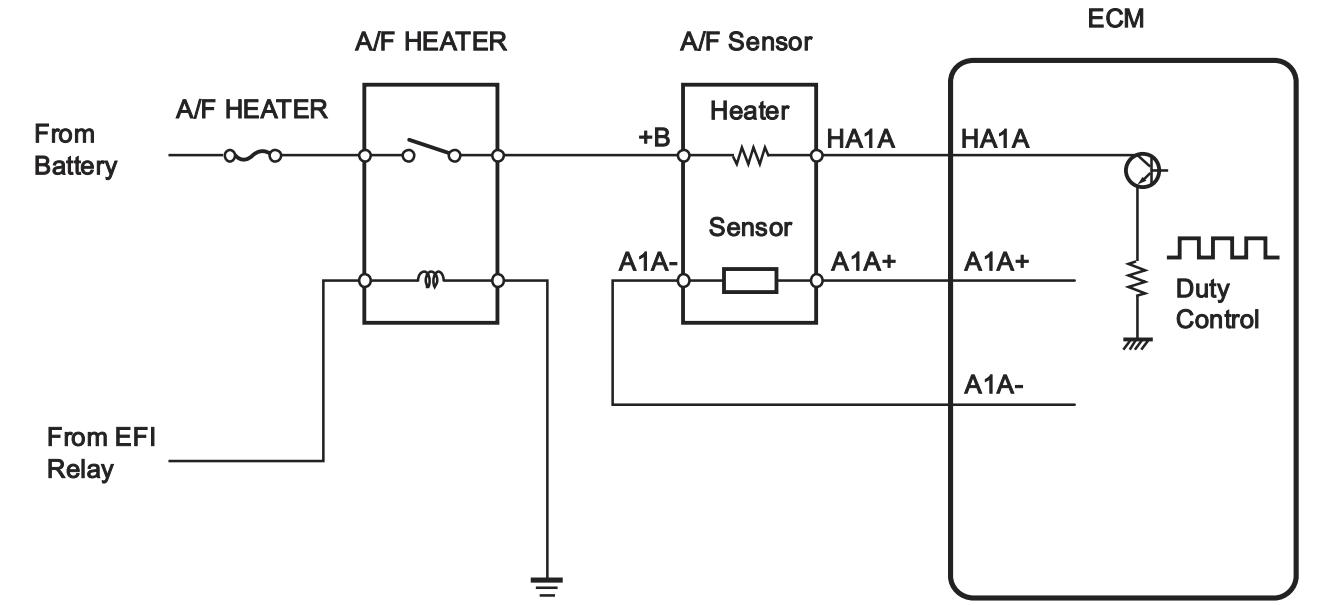

NG → **REPAIR OR REPLACE HARNESS OR CONNECTOR**

OK

14	REPLACE AIR FUEL RATIO SENSOR

(a) Replace the A/F sensor (See page EC-21).

NEXT

15	PERFORM CONFIRMATION DRIVING PATTERN

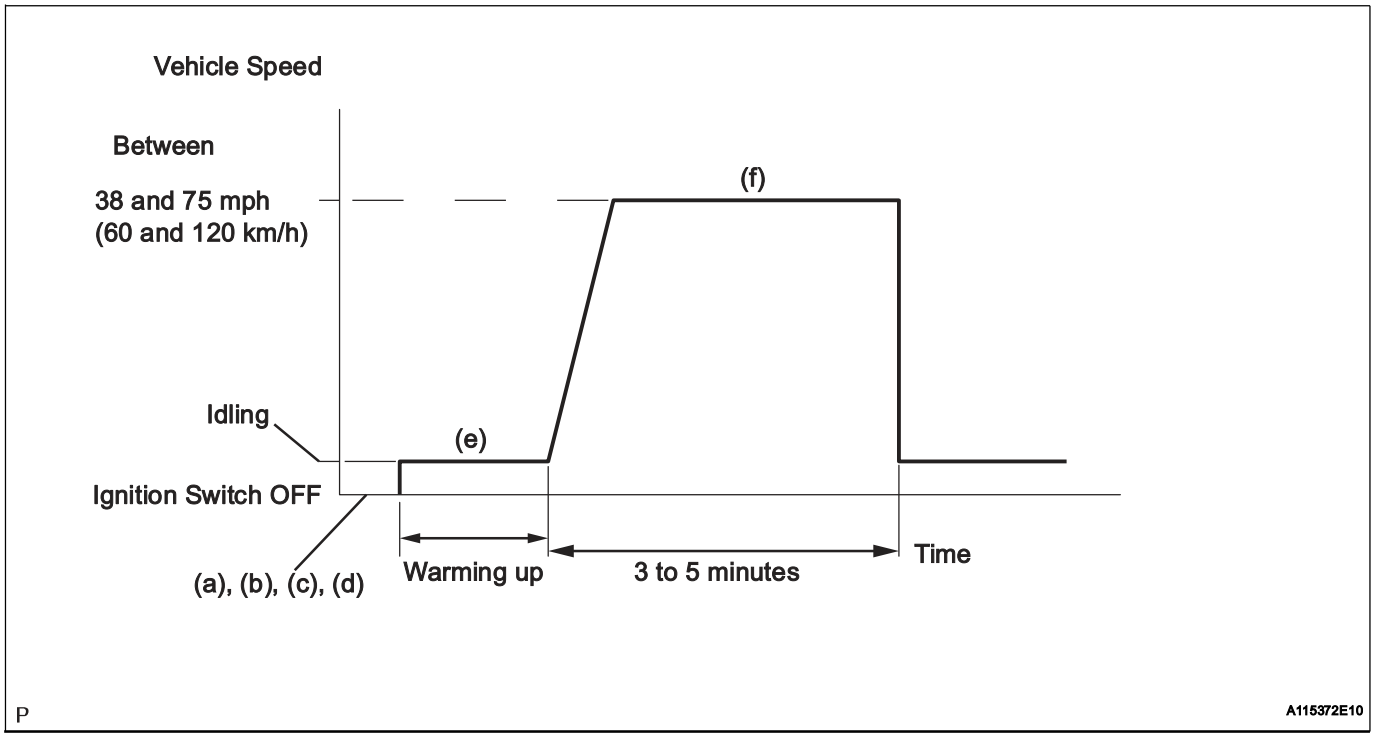

(a) Connect an intelligent tester to the DLC3.
(b) Turn the ignition switch ON and turn the tester ON.
(c) Clear DTCs (See page ES-38).
(d) Switch the ECM from normal mode to check mode using the tester (See page ES-42).
(e) Start the engine and warm it up with all the accessories switched OFF.
(f) Drive the vehicle at between 38 mph and 75 mph (60 km/h and 120 km/h) and at an engine speed of between 1,400 rpm and 3,200 rpm for 3 to 5 minutes.
HINT:
If the system is still malfunctioning, the MIL will be illuminated during step (f).
NOTICE:
If the conditions in this test are not strictly followed, no malfunction will be detected.

NEXT

16	CHECK WHETHER DTC OUTPUT RECURS (DTC P0171, P0172, P0174 OR P0175)

(a) Connect an intelligent tester to the DLC3.
(b) Turn the ignition switch ON and turn the tester ON.
(c) Select the following menu items: DIAGNOSIS / ENHANCED OBD II / DTC INFO / CURRENT CODES.
(d) Read DTCS.

Result

Display (DTC Output)	Proceed To
No output	A
P0171, P0172, P0174 or P0175	B

B → Go to step 5

A

END

DTC	P0230	Fuel Pump Primary Circuit

DESCRIPTION

As shown in the illustration, when the engine is cranked, current flows from terminal ST1 of the ignition switch into the ECM and the ST (starter) relay coil and also current flows to terminal STA of the ECM (STA signal).

When the STA signal and NE signal are input to the ECM, Tr1 (power transistor 1) is turned ON, current flows to the coil of the circuit opening relay, the relay switches on, power is supplied to the fuel pump, and the fuel pump operates.

While the NE signal is generated (engine running), the ECM keeps the Tr1 ON (circuit opening relay ON) and the fuel pump also keeps operating.

The fuel pump speed is controlled at two levels (high speed or low speed) by engine condition (starting, light load, heavy load). When the engine starts (STA ON), Tr2 (power transistor 2) in the ECM is OFF, so the fuel pump relay closes and positive battery voltage is applied directly to the fuel pump. The fuel pump operates at high speed.

During idling or under light loads, Tr2 goes ON, and then power is supplied to the fuel pump via the fuel pump resistor. The fuel pump operates at low speed.

ES

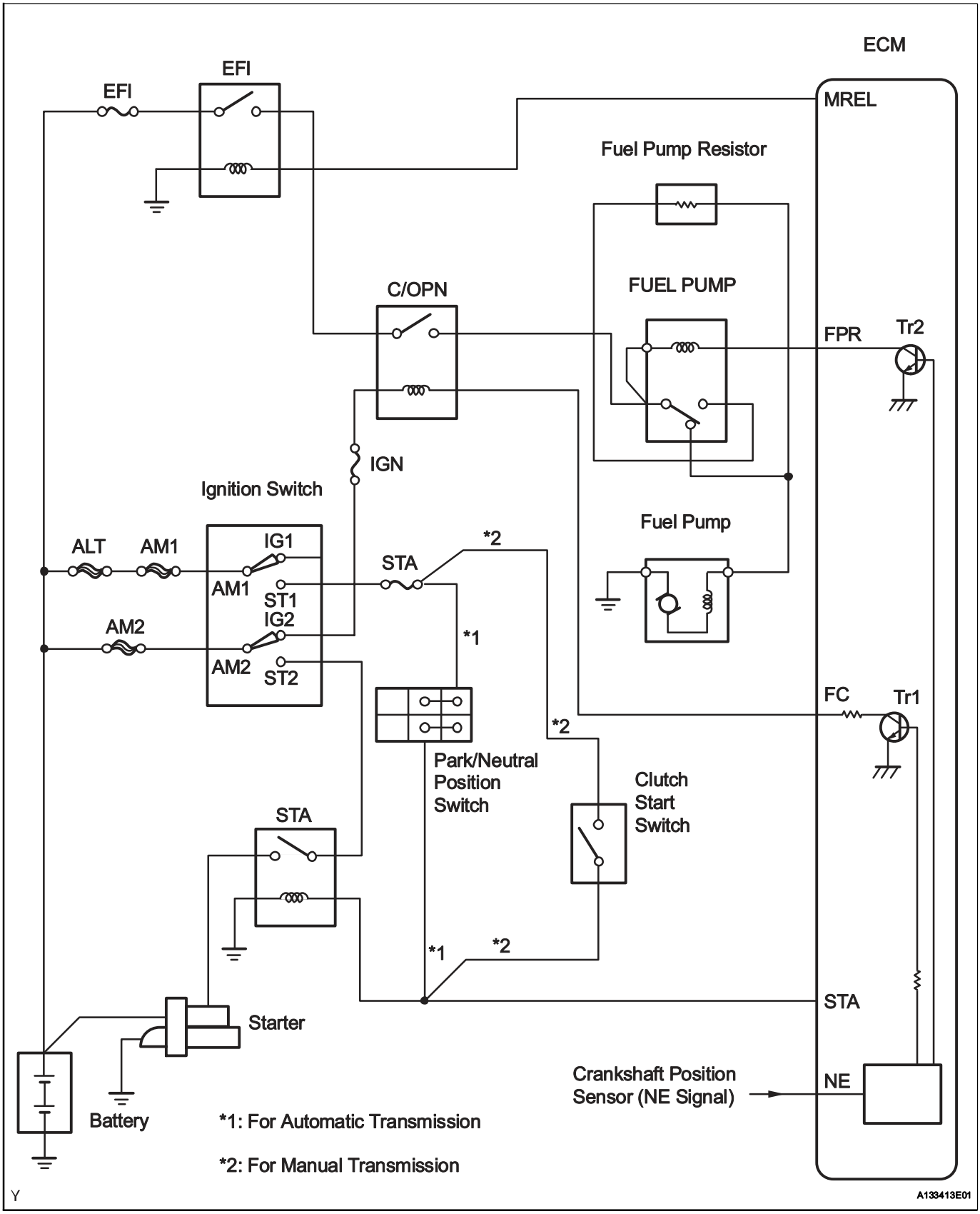

DTC No.	DTC Detection Conditions	Trouble Areas
P0230	Open or short in fuel pump relay circuit (1 trip detection logic)	• Open or short in fuel pump relay circuit • Fuel pump relay • ECM

WIRING DIAGRAM

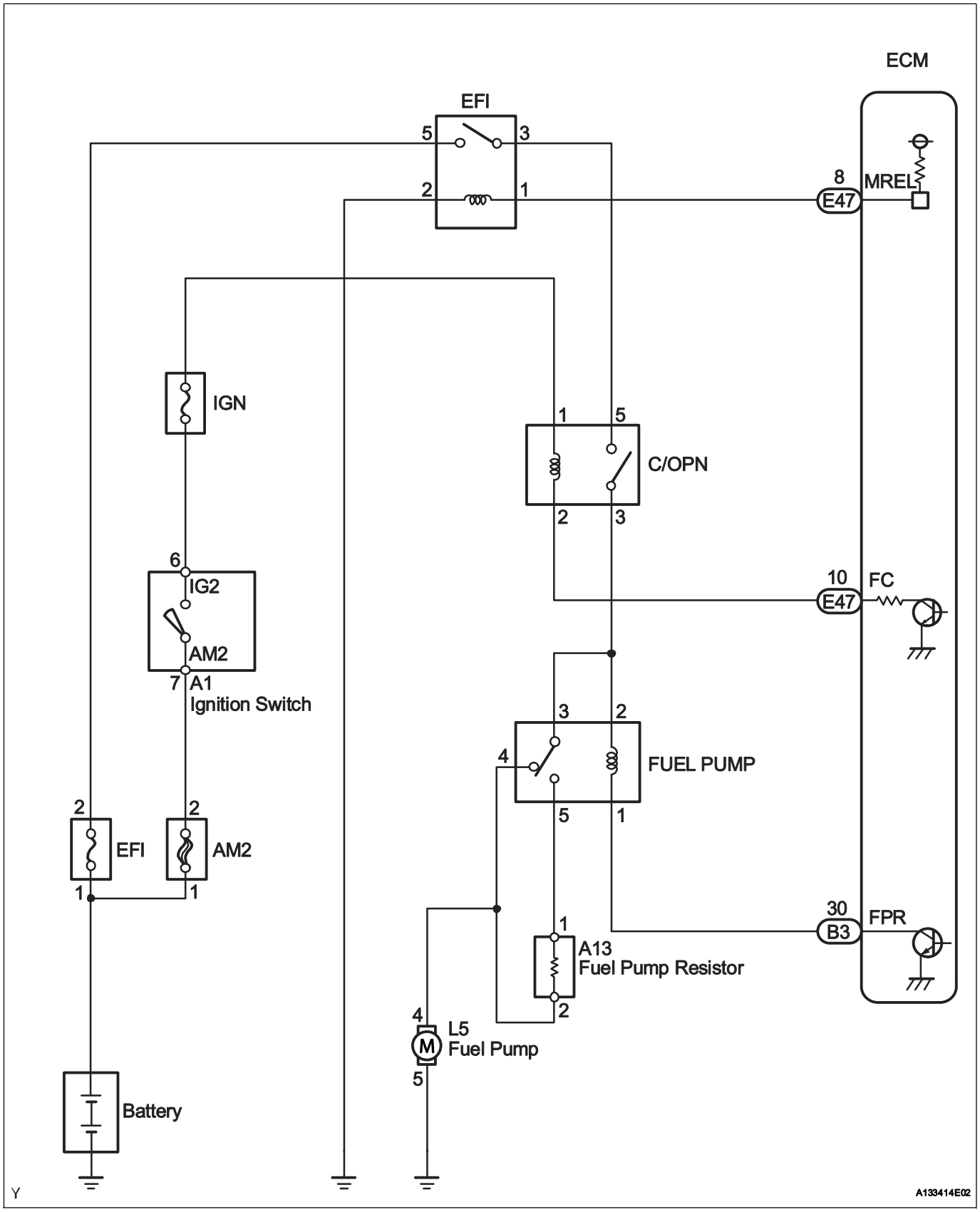

INSPECTION PROCEDURE

HINT:

- This DTC chart is on the premise that the engine is started normally. If the engine is difficult to start, proceed to the problem symptoms table (See page ES-28).
- Read freeze frame data using an intelligent tester. Freeze frame data record the engine condition when malfunctions are detected. When troubleshooting, freeze frame data can help determine if the vehicle was moving or stationary, if the engine was warmed up or not, if the air-fuel ratio was lean or rich, and other data, from the time the malfunction occurred.

ES

1 CHECK ECM (FPR VOLTAGE)

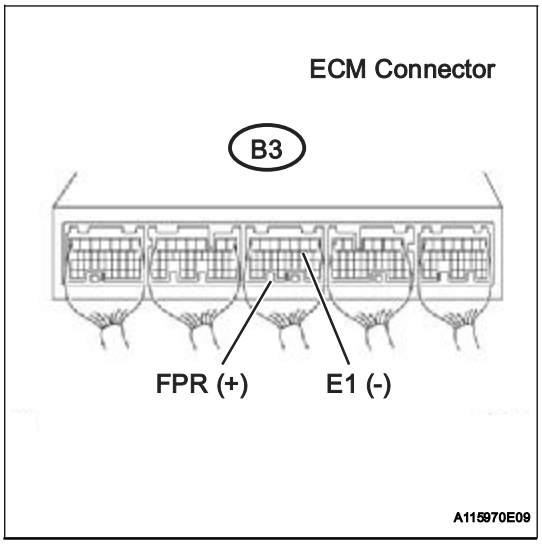

(a) Measure the voltage between the terminals of the B3 ECM connector.

Standard Voltage

Tester Connections	Conditions	Specified Conditions
FPR (B3-30) - E1 (B3-1)	STA signal ON	11 to 14 V
	STA signal OFF	0 to 3 V

NG → **REPLACE ECM (See page ES-446)**

OK

2 INSPECT FUEL PUMP RELAY ASSEMBLY

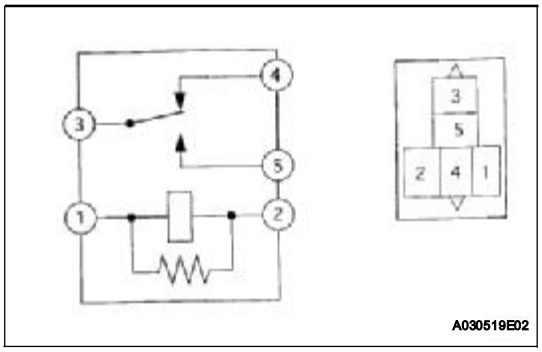

(a) Remove the fuel pump relay from the engine room R/B.

(b) Check the fuel pump relay resistance.

Standard Resistance

Tester Connections	Specified Conditions
3 - 4	Below 1 Ω
3 - 5	10 kΩ or higher
3 - 4	10 kΩ or higher (when battery voltage applied to terminals 1 and 2)
3 - 5	Below 1 Ω (when battery voltage applied to terminals 1 and 2)

(c) Reinstall the fuel pump relay.

NG → **REPLACE FUEL PUMP RELAY ASSEMBLY**

OK

3	CHECK HARNESS AND CONNECTOR (FUEL PUMP RELAY - ECM)

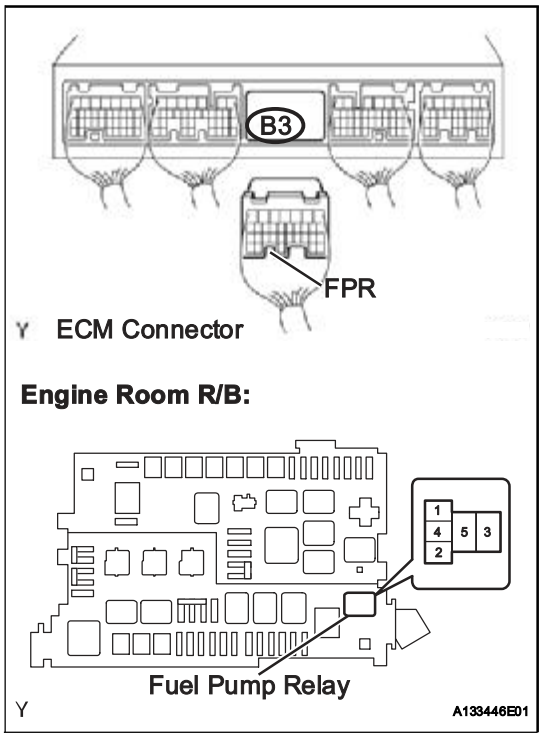

(a) Remove the fuel pump relay from the engine room R/B.
(b) Disconnect the B3 ECM connector.
(c) Check the resistance.

Standard Resistance (Check for open)

Tester Connections	Specified Conditions
Fuel pump relay (1) - FPR (B3-30)	Below 1 Ω

Standard Resistance (Check for short)

Tester Connections	Specified Conditions
Fuel pump relay (1) or FPR (B3-30) - Body ground	10 kΩ or higher

(d) Reinstall the fuel pump relay.
(e) Reconnect the ECM connector.

NG → **REPAIR OR REPLACE HARNESS OR CONNECTOR**

OK

REPLACE ECM (See page ES-446)

DTC	P0300	Random / Multiple Cylinder Misfire Detected
DTC	P0301	Cylinder 1 Misfire Detected
DTC	P0302	Cylinder 2 Misfire Detected
DTC	P0303	Cylinder 3 Misfire Detected
DTC	P0304	Cylinder 4 Misfire Detected
DTC	P0305	Cylinder 5 Misfire Detected
DTC	P0306	Cylinder 6 Misfire Detected

DESCRIPTION

When the engine misfires, high concentrations of hydrocarbons (HC) enter the exhaust gas. Extremely high HC concentration levels can cause increase in exhaust emission levels. High concentrations of HC can also cause increases in the Three-Way Catalytic Converter (TWC) temperature, which may cause damage to the TWC. To prevent this increase in emissions and to limit the possibility of thermal damage, the ECM monitors the misfire rate. When the temperature of the TWC reaches the point of thermal degradation, the ECM blinks the MIL. To monitor misfires, the ECM uses both the Camshaft Position (CMP) sensor and the Crankshaft Position (CKP) sensor. The CMP sensor is used to identify any misfiring cylinders and the CKP sensor is used to measure variations in the crankshaft rotation speed. Misfires are counted when the crankshaft rotation speed variations exceed predetermined thresholds. If the misfire exceeds the threshold levels, and could cause emission deterioration, the ECM illuminates the MIL and sets a DTC.

DTC No.	DTC Detection Conditions	Trouble Areas
P0300	Simultaneous misfiring of several cylinders detected (2 trip detection logic)	• Open or short in engine wire harness • Connector connection • Vacuum hose connections • Ignition system • Injector • Fuel pressure • Mass Air Flow (MAF) meter • Engine Coolant Temperature (ECT) sensor • Compression pressure • Valve clearance • Valve timing • PCV valve and hose • PCV hose connections • Air induction system • ECM
P0301 P0302 P0303 P0304 P0305 P0306	Misfiring of specific cylinder detected (2 trip detection logic)	

HINT:
When DTCs for misfiring cylinders are randomly set, but DTC P0300 is not set, it indicates that misfires have been detected in different cylinders at different times. DTC P0300 is only set when several misfiring cylinders are detected at the same time.
Reference: Inspection using an oscilloscope.
With the engine idling, check the waveform between terminals #10 to #60 and E1 of the ECM connectors.

Items	Contents
Terminals	#10 to #60 - E01
Equipment Settings	20 V/Division, 100 or 1 msec./Division

Items	Contents
Conditions	Idling

HINT:
The correct waveform is as shown.

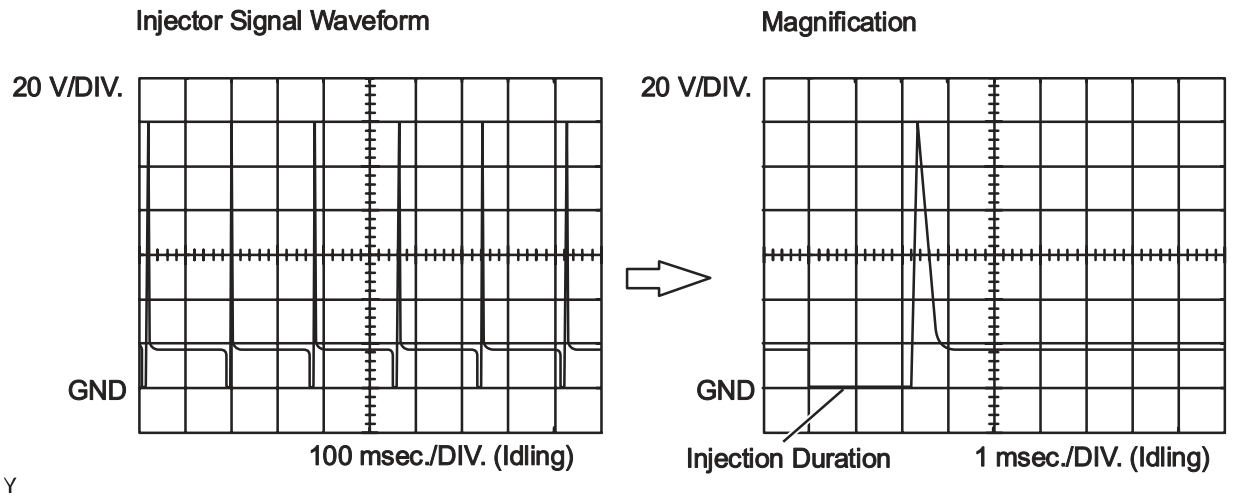

MONITOR DESCRIPTION

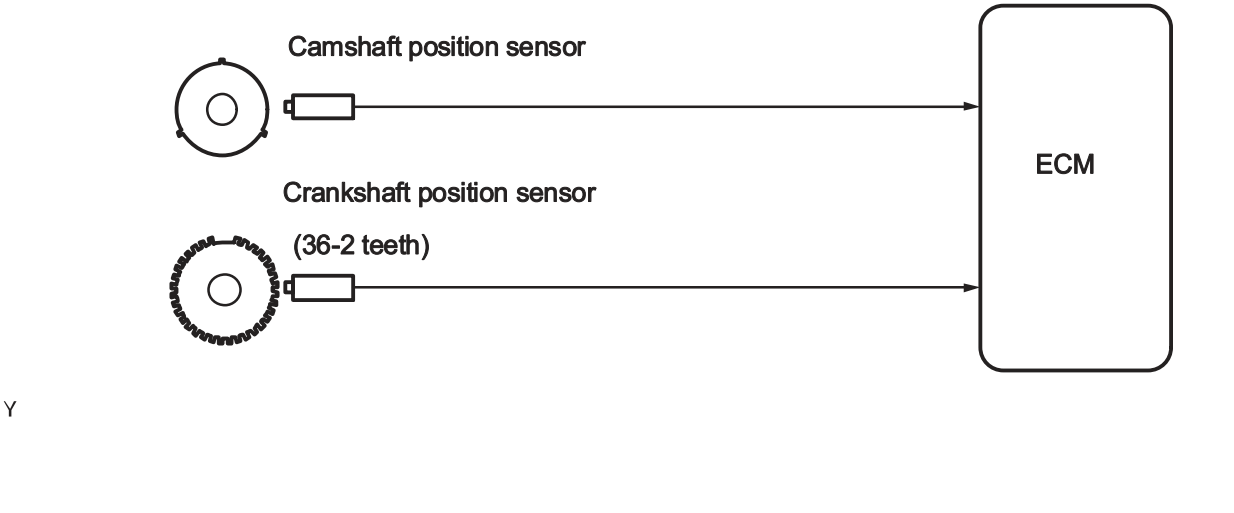

The ECM illuminates the MIL and sets a DTC when either one of the following conditions, which could cause emission deterioration, is detected (2 trip detection logic).

- Within the first 1,000 crankshaft revolutions of the engine starting, an excessive misfiring rate (approximately 20 to 50 misfires per 1,000 crankshaft revolutions) occurs once.

- After the first 1,000 crankshaft revolutions, an excessive misfiring rate (approximately 20 to 50 misfires per 1,000 crankshaft revolutions) occurs 4 times in sequential crankshaft revolutions.

The ECM flashes the MIL and sets a DTC when either one of the following conditions, which could cause the Three-Way Catalytic Converter (TWC) damage, is detected (2 trip detection logic).

- In every 200 crankshaft revolutions at a high engine rpm, the threshold misfiring percentage is recorded once.
- In every 200 crankshaft revolutions at a normal engine rpm, the threshold misfiring percentage is recorded 3 times.

MONITOR STRATEGY

Related DTCs	P0300: Multiple cylinder misfire P0301: Cylinder 1 misfire P0302: Cylinder 2 misfire P0303: Cylinder 3 misfire P0304: Cylinder 4 misfire P0305: Cylinder 5 misfire P0306: Cylinder 6 misfire
Required Sensors/Components (Main)	Crankshaft position sensor and Camshaft position sensor
Required Sensors/Components (Related)	Engine coolant temperature and Intake air temperature sensors and Mass air flow meter
Frequency of Operation	Continuous
Duration	1,000 to 4,000 crankshaft revolutions: Emission related misfire 200 to 600 crankshaft revolutions: Catalyst damaged misfire
MIL Operation	2 driving cycles: Emission related misfire MIL flashes immediately: Catalyst damaged misfire
Sequence of Operation	None

TYPICAL ENABLING CONDITIONS

Misfire:

Monitor runs whenever following DTCs not present	P0100 - P0103 (MAF meter) P0110 - P0113 (IAT sensor) P0115 - P0118 (ECT sensor) P0120 - P0223, P2135 (TP sensor) P0125 (Insufficient ECT for closed loop) P0327 - P0333 (knock sensor) P0335 (CKP sensor) P0340 (CMP sensor) P0500 (VSS)
Battery voltage	8 V or more
VVT system	Not operated by scan tool
Engine RPM	Manual Transmission: 450 to 5,400 rpm Automatic Transmission: 400 to 5,400 rpm
Either of following conditions (a) or (b) met	-
(a) ECT at engine start	More than -7°C (19°F)
(b) ECT	More than 20°C (68°F)
Fuel cut	OFF

Monitor period of emission-related-misfire:

First 1,000 revolutions after engine start, or check mode	Crankshaft 1,000 revolutions
Except above	Crankshaft 1,000 revolutions x 4

Monitor period of catalyst-damaged-misfire (MIL blinks):

All of following conditions 1, 2 and 3 met	Crankshaft 200 revolutions x 3
1. Driving cycles	1st
2. Check mode	OFF
3. Engine RPM	Less than 2,800 rpm

Except above	Crankshaft 200 revolutions

TYPICAL MALFUNCTION THRESHOLDS

Monitor period of emission-related-misfire:

Misfire rate	2.9 % or more (Manual transmission) 2 % or more (Automatic transmission)

Monitor period of catalyst-damage-misfire (MIL blinks):

Number of misfires per 200 revolutions	77 or more (varies with intake air amount and RPM)
Paired cylinders misfire (MIL blinks immediately)	Detected

MONITOR RESULT

Refer to CHECKING MONITOR STATUS (See page ES-20).

WIRING DIAGRAM

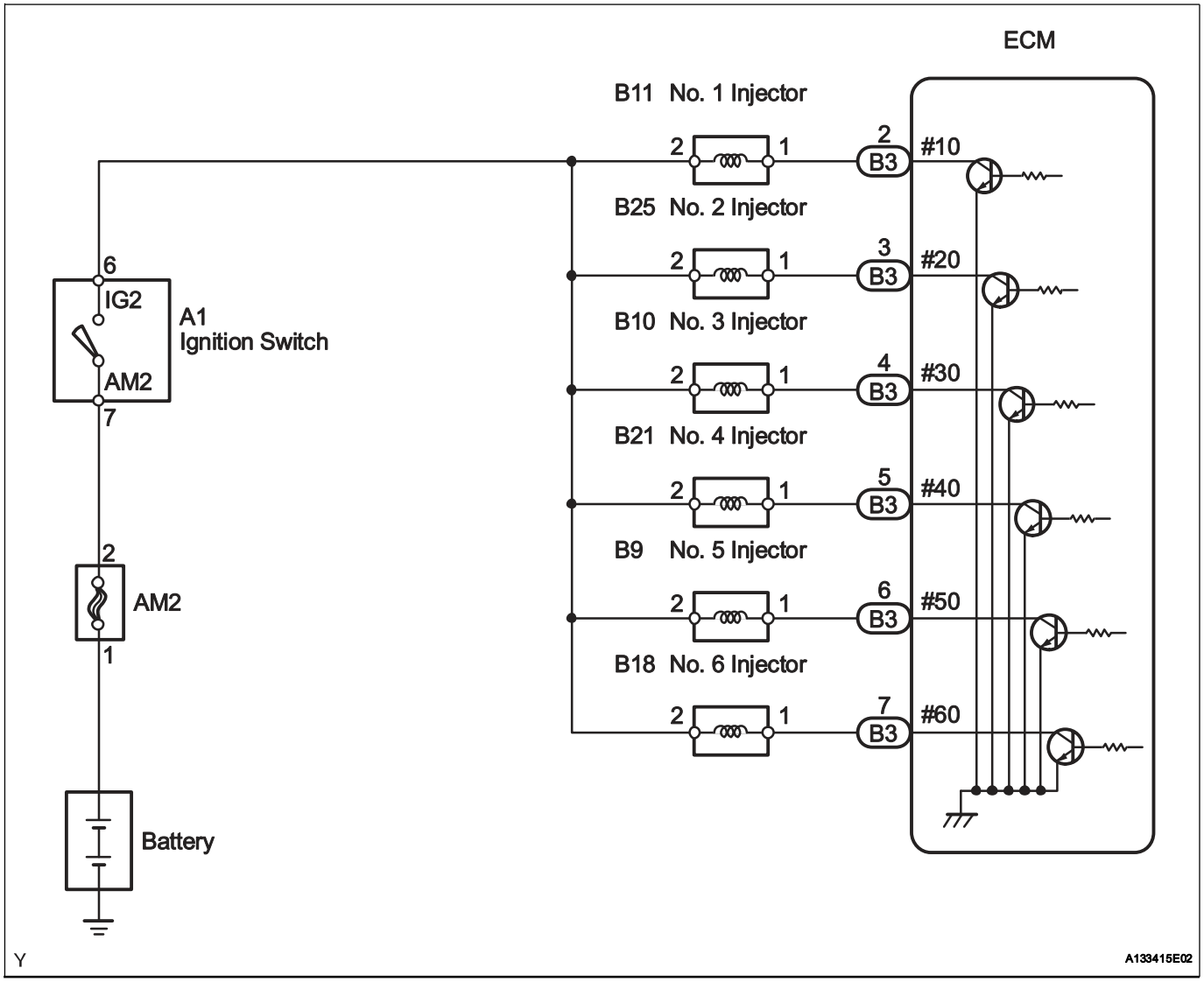

CONFIRMATION DRIVING PATTERN

(a) Connect an intelligent tester to the DLC3.
(b) Turn the ignition switch ON.
(c) Turn the tester ON.

(d) Record the DTC(s) and freeze frame data.
(e) Using the tester, switch the ECM from normal mode to check mode (See page ES-42).
(f) Read the misfire counts of each cylinder (CYL #1 to #6) with the engine in an idling condition. If any misfire count is displayed, skip the following confirmation driving pattern.
(g) Drive the vehicle several times with the conditions, such as engine rpm and engine load, shown in MISFIRE RPM and MISFIRE LOAD in the DATA LIST.
HINT:
In order to store misfire DTCs, it is necessary to drive the vehicle for the period of time shown in the table below, with the MISFIRE RPM and MISFIRE LOAD in the DATA LIST.

Engine RPM	Duration
Idling	3.5 minutes or more
1,000	3 minutes or more
2,000	1.5 minutes or more
3,000	1 minute or more

ES

(h) Check whether misfires have occurred by checking DTCs and freeze frame data.
HINT:
Do not turn the ignition switch OFF until the stored DTC(s) and freeze frame data have been recorded. When the ECM returns to normal mode (default), the stored DTC(s), freeze frame data and other data will be erased.
(i) Record the DTC(s), freeze frame data and misfire counts.
(j) Turn the ignition switch OFF and wait for at least 5 seconds.

INSPECTION PROCEDURE

HINT:
- If any DTCs other than the misfire DTCs are output, troubleshoot those DTCs first.
- Read freeze frame data using an intelligent tester. Freeze frame data record the engine conditions when malfunctions are detected. When troubleshooting, freeze frame data can help determine if the vehicle was moving or stationary, if the engine was warmed up or not, if the air-fuel ratio was lean or rich, and other data, from the time the malfunction occurred.
- If the misfire does not recur when the vehicle is brought to the workshop, reproduce the conditions stored in the freeze frame data.
- The misfire still cannot be reproduced even though the conditions stored in the freeze frame data have been duplicated, one of the following factors is considered to be a possible cause of the problem:
  (1) The fuel tank is low full.
  (2) Improper fuel is used.
  (3) The spark plugs have been contaminated.
  (4) The problem is complex due to multiple factors.
- After finishing repairs, check the misfire counts of the cylinders (CYL #1, #2, #3, #4, #5 and #6).
- Be sure to confirm that no misfiring cylinder DTCs are set again by conducting the confirmation driving pattern, after repairs.
- For 6 and 8 cylinder engines, the ECM intentionally does not set the specific misfiring cylinder DTCs at high engine RPM. If misfires occur only in high engine RPM areas, only DTC P0300 is set.
  In the event of DTC P0300 being present, perform the following operations:
  (1) Clear DTCs (See page ES-38).
  (2) Start the engine and conduct the confirmation driving pattern.
  (3) Read the misfiring rates of each cylinder or DTC(s) using the tester.
  (4) Repair the cylinder(s) that has a high misfiring rate or is indicated by the DTC.
  (5) After finishing repairs, conduct the confirmation driving pattern again, in order to verify that DTC P0300 is not set.
- When one of SHORT FT #1, LONG FT #1, SHORT FT #2 or LONG FT #2 in the freeze frame data is outside the range of +-20 %, the air-fuel ratio may be rich (-20 % or less) or lean (+20 % or more).
- When the COOLANT TEMP in the freeze frame data is less than 75°C (167°F), the misfires have occurred only while warming up the engine.

1	CHECK ANY OTHER DTCS OUTPUT (IN ADDITION TO MISFIRE DTCS)

(a) Connect an intelligent tester to the DLC3.
(b) Turn the ignition switch ON.
(c) Turn the tester ON.
(d) Select the following menu items: DIAGNOSIS / ENHANCED OBD II / DTC INFO / CURRENT CODES.
(e) Read DTCs.

Result

Display (DTC Output)	Proceed To
P0300, P0301, P0302, P0303, P0304, P0305 and/or P0306	A
P0300, P0301, P0302, P0303, P0304, P0305 and/or P0306 and other DTCs	B

HINT:
If any DTCs other than P0300, P0301, P0302, P0303, P0304, P0305 and P0306 are output, troubleshoot those DTCs first.

B → **GO TO DTC CHART (See page ES-57)**

A

2	READ VALUE USING INTELLIGENT TESTER (MISFIRE RPM AND MISFIRE LOAD)

(a) Connect an intelligent tester to the DLC3.
(b) Turn the ignition switch ON and turn the tester ON.
(c) Select the following menu items: DIAGNOSIS / ENHANCED OBD II / DATA LIST / MISFIRE / MISFIRE RPM and MISFIRE LOAD.
(d) Read and note the MISFIRE RPM and MISFIRE LOAD (engine load) values.
HINT:
The MISFIRE RPM and MISFIRE LOAD indicate the vehicle conditions under which the misfire occurred.

NEXT

3	CHECK PCV HOSE CONNECTIONS

OK:
PCV hose is connected correctly and is not damaged.

NG → **REPAIR OR REPLACE PCV HOSE**

OK

4	CHECK MISFIRE COUNT (CYL #1, #2, #3, #4, #5 AND #6)

(a) Connect an intelligent tester to the DLC3.
(b) Turn the ignition switch ON.
(c) Turn the tester ON.
(d) Clear DTCs (See page ES-38).

(e) Select the following menu items: DIAGNOSIS / ENHANCED OBD II / DATA LIST / MISFIRE / CYL #1, #2, #3, #4, #5 and #6.
(f) Allow the engine to idle.
(g) Read each value of CYL #1 to #6 displayed on the tester. If no misfire counts occur in any cylinders, perform the following operations:
  (1) Shift the gear selector lever to the D position.
  (2) Repeat steps (e) to (g) above.
  (3) Check the CYL #1 to #6.
  (4) If misfire counts are still not displayed, perform steps (h) and (i) and then check the misfire counts again.
(h) Drive the vehicle with the MISFIRE RPM and MISFIRE LOAD noted in step 2.
(i) Read the CYL #1 to #6 or DTCs displayed on the tester.

Result

Misfire Count	Proceed To
One or two cylinders have misfire counts	A
Three cylinders or more have misfire counts	B

B → **Go to step 13**

A

5 CHECK SPARK PLUG

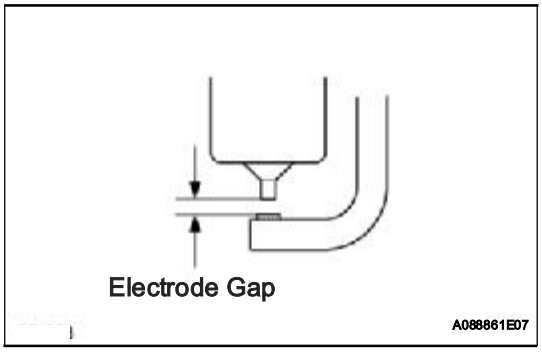

(a) Remove the ignition coil and the spark plug of the misfiring cylinder.
(b) Measure the spark plug electrode gap.
Standard:
1.0 to 1.1 mm (0.039 to 0.043 in.)
(c) Check the electrode for carbon deposits.
Recommended spark plug

Manufactures	Products
DENSO	K20HR-U11
NGK	LFR6C11

NOTICE:
If the electrode gap is larger than standard, replace the spark plug. Do not adjust the electrode gap.
(d) Reinstall the ignition coil and the spark plug.

NG → **REPLACE SPARK PLUG**

OK

6 CHECK SPARKS AND IGNITION

(a) Disconnect the injector connectors, in order to prevent the engine from starting.
(b) Install the spark plug to the ignition coil.

(c) Attach the spark plug assembly to the cylinder head cover.
(d) Crank the engine for less than 2 seconds and check the spark.
OK:
Sparks jump across electrode gap
(e) Reconnect the injector connectors.

NG → **Go to step 8**

OK

7	CHECK CYLINDER COMPRESSION PRESSURE OF MISFIRING CYLINDER

(a) Measure the cylinder compression pressure of the misfiring cylinder.

OK → **Go to step 9**

NG

REPAIR OR REPLACE MALFUNCTION PARTS

8	CHANGE NORMAL SPARK PLUG AND CHECK SPARK OF MISFIRING CYLINDER

(a) Change the installed spark plug to a spark plug that functions normally.
(b) Perform a spark test.
CAUTION:
Always disconnect each injector connector.
NOTICE:
Do not crank the engine for more than 2 seconds.
(1) Install the spark plug to the ignition coil and connect the ignition coil connector.
(2) Disconnect the injector connector.
(3) Ground the spark plug.
(4) Check if sparks occur while the engine is being cranked.
OK:
Sparks jump across electrode gap.

NG → **REPLACE IGNITION COIL ASSEMBLY THEN CONFIRM THAT THERE IS NO MISFIRE**

OK

REPLACE SPARK PLUG

ES

9 INSPECT ECM TERMINAL VOLTAGE OF MISFIRING CYLINDER (#10, #20, #30, #40, #50 AND/OR #60 VOLTAGE)

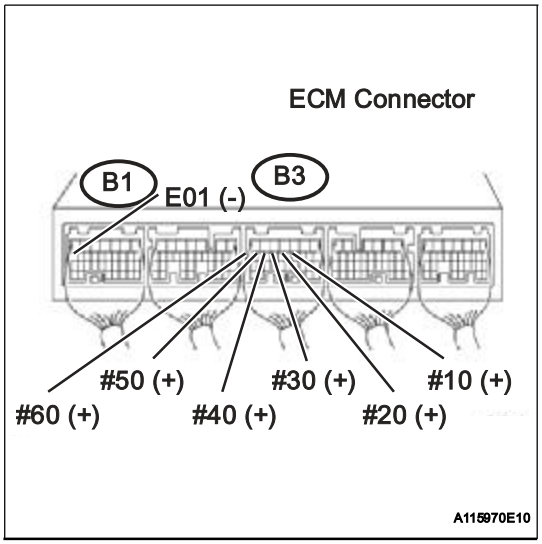

(a) Turn the ignition switch ON.
(b) Measure the voltage between the terminals of the B1 and B3 ECM connectors.

Standard Voltage

Tester Connections	Specified Conditions
#10 (B3-2) - E01 (B1-7)	11 to 14 V
#20 (B3-3) - E01 (B1-7)	
#30 (B3-4) - E01 (B1-7)	
#40 (B3-5) - E01 (B1-7)	
#50 (B3-6) - E01 (B1-7)	
#60 (B3-7) - E01 (B1-7)	

OK → **Go to step 11**

NG

10 CHECK HARNESS AND CONNECTOR (INJECTOR - ECM)

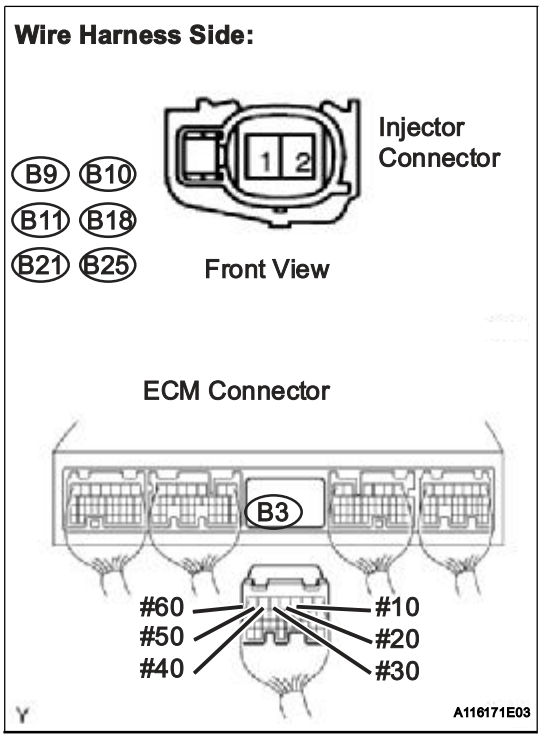

(a) Disconnect the injector connector (of the misfiring cylinder).
(b) Disconnect the B3 ECM connector.
(c) Turn the ignition switch ON.
(d) Measure the resistance and voltage between the injector and the ECM connector terminals.

Standard (Cylinder No. 1)

Tester Connections	Specified Conditions
B11-2 - Ground	11 to 14 V
B11-1 - Ground	10 kΩ or higher
B11-1 - #10 (B3-2)	Below 1 Ω

Standard (Cylinder No. 2)

Tester Connections	Specified Conditions
B25-2 - Ground	11 to 14 V
B25-1 - Ground	10 kΩ or higher
B25-1 - #20 (B3-3)	Below 1 Ω

Standard (Cylinder No. 3)

Tester Connections	Specified Conditions
B10-2 - Ground	11 to 14 V
B10-1 - Ground	10 kΩ or higher
B10-1 - #30 (B3-4)	Below 1 Ω

Standard (Cylinder No. 4)

Tester Connections	Specified Conditions
B21-2 - Ground	11 to 14 V
B21-1 - Ground	10 kΩ or higher

Tester Connections	Specified Conditions
B21-1 - #40 (B3-5)	Below 1 Ω

Standard (Cylinder No. 5)

Tester Connections	Specified Conditions
B9-2 - Ground	11 to 14 V
B9-1 - Ground	10 kΩ or higher
B9-1 - #50 (B3-6)	Below 1 Ω

Standard (Cylinder No. 6)

Tester Connections	Specified Conditions
B18-2 - Ground	11 to 14 V
B18-1 - Ground	10 kΩ or higher
B18-1 - #60 (B3-7)	Below 1 Ω

(e) Reconnect the injector connector.
(f) Reconnect the ECM connector.

NG → **REPAIR OR REPLACE HARNESS OR CONNECTOR**

OK

11 CHECK FUEL INJECTOR OF MISFIRING CYLINDER

(a) Check the injector injection (whether fuel volume is high or low, and whether injection pattern is poor).

NG → **REPLACE FUEL INJECTOR ASSEMBLY (See page FU-11)**

OK

12 CHECK VALVE CLEARANCE OF MISFIRING CYLINDER

NG → **ADJUST VALVE CLEARANCE (See page EM-8)**

OK

13 CHECK AIR INDUCTION SYSTEM

(a) Check the air induction system for vacuum leakage.
OK:
No leakage from air induction system.

NG → **REPAIR OR REPLACE AIR INDUCTION SYSTEM**

OK

14	CHECK VALVE TIMING

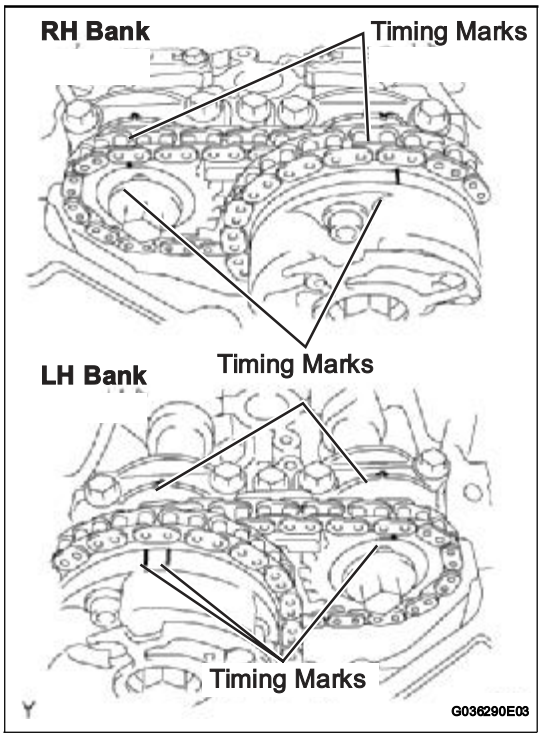

(a) Remove the cylinder head cover.
(b) Turn the crankshaft pulley, and align its groove with the timing mark "0" of the timing chain cover.
(c) Check that the timing marks of the camshaft timing gears are aligned with the timing marks of the bearing cap as shown in the illustration.
If not, turn the crankshaft 1 revolution (360°) and align the marks as above.
OK:
Timing marks on camshaft timing gears are aligned as shown in illustration.
(d) Reinstall the cylinder head cover.

NG → **ADJUST VALVE TIMING**

OK

15	CHECK FUEL PRESSURE

(a) Check the fuel pressure (See page FU-6).

NG → **CHECK AND REPLACE FUEL PUMP, PRESSURE REGULATOR, FUEL PIPE LINE AND FILTER**

OK

16	READ VALUE USING INTELLIGENT TESTER (COOLANT TEMP)

(a) Connect an intelligent tester to the DLC3.
(b) Turn the ignition switch ON.
(c) Turn the tester ON.
(d) Select the following menu items: DIAGNOSIS / ENHANCED OBD II / DATA LIST / PRIMARY / COOLANT TEMP.
(e) Read the COOLANT TEMP twice, when the engine is both cold and warmed up.
Standard:
With cold engine: Same as ambient air temperature.
With warm engine: 80°C to 100°C (176°F to 212°F).

NG → **REPLACE ENGINE COOLANT TEMPERATURE SENSOR (See page ES-424)**

OK

17	READ VALUE USING INTELLIGENT TESTER (MAF)

(a) Connect an intelligent tester to the DLC3.
(b) Turn the ignition switch ON.
(c) Turn the tester ON.
(d) Select the following menu items: DIAGNOSIS / ENHANCED OBD II / DATA LIST / PRIMARY / MAF and COOLANT TEMP.
(e) Allow the engine to idle until the COOLANT TEMP reaches 75°C (167°F) or more.
(f) Read the MAF with the engine in an idling condition and at an engine speed of 2,500 rpm.
Standard:
MAF while engine idling: 3.2 to 4.7 g/sec (shift position: N, A/C: OFF).
MAF at engine speed of 2,500 rpm: 13.1 to 18.9 g/sec (shift position: N, A/C: OFF).

NG → **REPLACE MASS AIR FLOW METER (See page ES-409)**

OK

CHECK FOR INTERMITTENT PROBLEMS

ES

DTC	P0327	Knock Sensor 1 Circuit Low Input (Bank 1 or Single Sensor)

DTC	P0328	Knock Sensor 1 Circuit High Input (Bank 1 or Single Sensor)

DTC	P0332	Knock Sensor 2 Circuit Low Input (Bank 2)

DTC	P0333	Knock Sensor 2 Circuit High Input (Bank 2)

ES

DESCRIPTION

A flat type knock sensor (non-resonant type) has a structure that can detect vibrations over a wide band of frequencies: between approximately 6 kHz and 15 kHz.
Knock sensors are fitted onto the engine block to detect engine knocking.
The knock sensor contains a piezoelectric element which generates a voltage when it becomes deformed. The voltage is generated when the engine block vibrates due to knocking. Any occurrence of engine knocking can be suppressed by delaying the ignition timing.

DTC No.	DTC Detection Conditions	Trouble Areas
P0327 P0332	Output voltage of knock sensor 1 or 2 is 0.5 V or less (1 trip detection logic)	• Short in knock sensor 1 or 2 circuit • Knock sensor 1 or 2 • ECM
P0328 P0333	Output voltage of knock sensor 1 or 2 is 4.5 V or more (1 trip detection logic)	• Open in knock sensor 1 or 2 circuit • Knock sensor 1 or 2 • ECM

HINT:
When any of DTCs P0327, P0328, P0332 and P0333 are set, the ECM enters fail-safe mode. During fail-safe mode, the ignition timing is delayed to its maximum retardation. Fail-safe mode continues until the ignition switch is turned OFF.

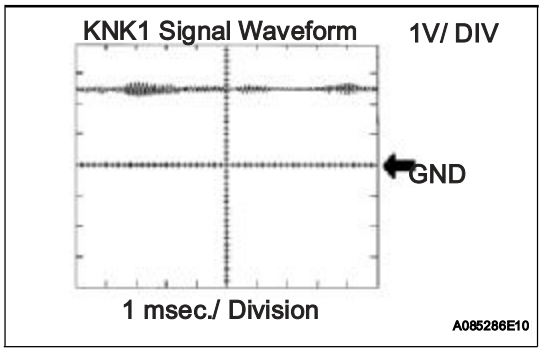

Reference: Inspection using an oscilloscope
The correct waveform is as shown.

Items	Contents
Terminals	KNK1 - EKNK or KNK2 - EKN2
Equipment Settings	1 V/Division, 1 msec./Division
Conditions	Keep engine speed at 4,000 rpm with warm engine

MONITOR DESCRIPTION

If the output voltage transmitted by the knock sensor remains low or high for more than 1 second, the ECM interprets this as a malfunction in the sensor circuit, and sets a DTC.
The monitor for DTCs P0327, P0328, P0332 and P0333 begins to run when 5 seconds have elapsed since the engine was started.
If the malfunction is not repaired successfully, any of DTC P0327, P0328, P0332 or P0333 is set 5 seconds after the engine is next started.

MONITOR STRATEGY

Related DTCs	P0327: Knock sensor (Bank 1) open/short (Low voltage) P0328: Knock sensor (Bank 1) open/short (High voltage) P0332: Knock sensor (Bank 2) open/short (Low voltage) P0333: Knock sensor (Bank 2) open/short (High voltage)
Required Sensors/Components (Main)	Knock sensor (Bank 1 and 2)
Required Sensors/Components (Related)	-
Frequency of Operation	Continuous
Duration	1 second
MIL Operation	Immediate
Sequence of Operation	None

TYPICAL ENABLING CONDITIONS

Monitor runs whenever following DTCs not present	None
Battery voltage	10.5 V or more
Time after engine start	5 seconds or more

TYPICAL MALFUNCTION THRESHOLDS

Knock Sensor Range Check (Low voltage) P0327 and P0332:

Knock sensor voltage	Less than 0.5 V

Knock Sensor Range Check (High voltage) P0328 and P0333:

Knock sensor voltage	More than 4.5 V

WIRING DIAGRAM

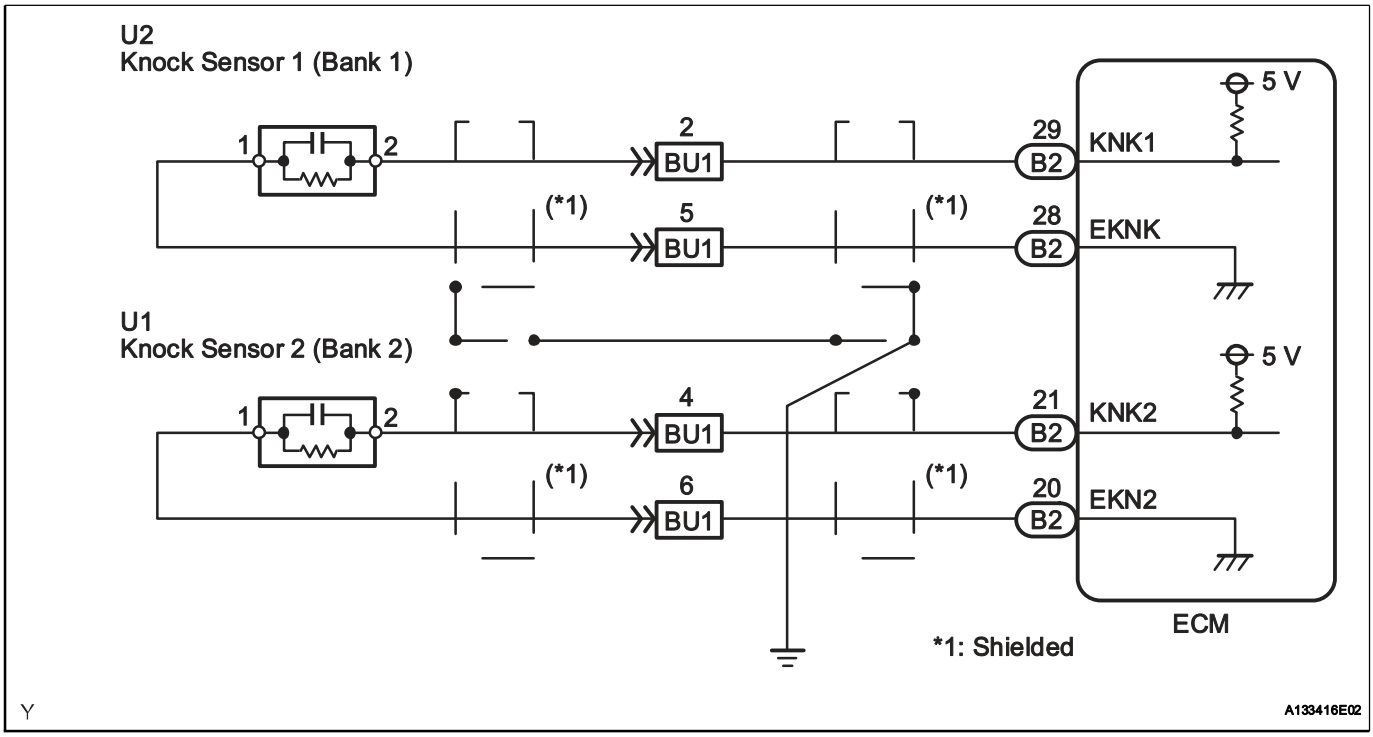

INSPECTION PROCEDURE

HINT:

- DTCs P0327 and P0328 are for the bank 1 knock sensor circuit.
- DTCs P0332 and P0333 are for the bank 2 knock sensor circuit.
- Read freeze frame data using an intelligent tester. Freeze frame data record the engine condition when malfunctions are detected. When troubleshooting, freeze frame data can help determine if the vehicle was moving or stationary, if the engine was warmed up or not, if the air-fuel ratio was lean or rich, and other data, from the time the malfunction occurred.

1	READ OUTPUT DTC (CHECK KNOCK SENSOR CIRCUIT)

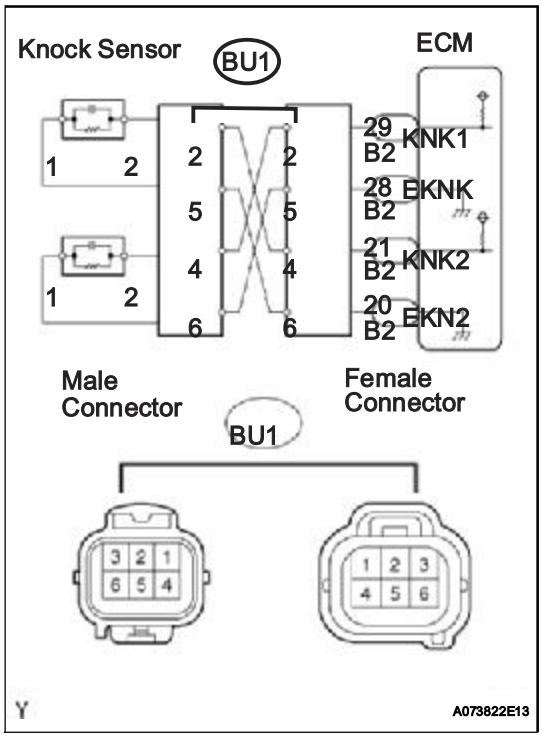

(a) Disconnect the BU1 connector.
(b) Using lead wires, connect the connectors as follows.

Male Connector - Female Connector
Terminal 2 - Terminal 4
Terminal 5 - Terminal 6
Terminal 4 - Terminal 2
Terminal 6 - Terminal 5

(c) Warm up the engine.
(d) Run the engine at 3,000 rpm for 10 seconds or more.
(e) Connect an intelligent tester to the DLC3.
(f) Turn the ignition switch ON and turn the tester ON.
(g) Select the item: DIAGNOSIS / ENHANCED OBD II / DTC INFO / CURRENT CODES.
(h) Read DTCs.

Result

Display	Proceed to
DTCs same as when vehicle brought in P0327, P0328 → P0327, P0328 or P0332, P0333 → P0332, P0333	A
DTCs different from when vehicle brought in P0327, P0328 → P0332, P0333 or P0332, P0333 → P0327, P0328	B

(i) Reconnect the BU1 connector.

B → Go to step 4

A

2 CHECK HARNESS AND CONNECTOR (CONNECTOR - ECM)

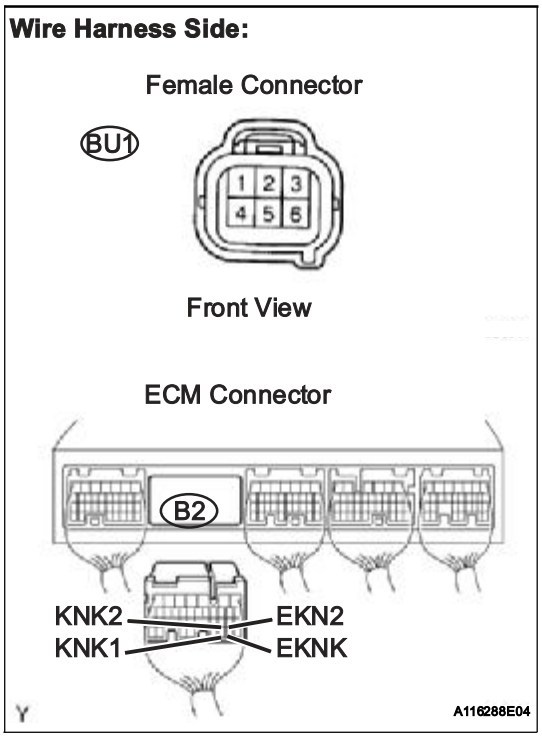

(a) Disconnect the BU1 connector.
(b) Disconnect the B2 ECM connector.
(c) Check the resistance.

Standard Resistance (Check for open)

Tester Connections	Specified Conditions
BU1 female connector 2 - KNK1 (B2-29)	Below 1 Ω
BU1 female connector 5 - EKNK (B2-28)	
BU1 female connector 4 - KNK2 (B2-21)	
BU1 female connector 6 - EKN2 (B2-20)	

Standard Resistance (Check for short)

Tester Connections	Specified Conditions
BU1 female connector 2 or KNK1 (B2-29) - Body ground	10 kΩ or higher
BU1 female connector 5 or EKNK (B2-28) - Body ground	
BU1 female connector 4 or KNK2 (B2-21) - Body ground	
BU1 female connector 6 or EKN2 (B2-20) - Body ground	

(d) Reconnect the BU1 connector.
(e) Reconnect the ECM connector.

NG → **REPAIR OR REPLACE HARNESS OR CONNECTOR**

OK

3 INSPECT ECM

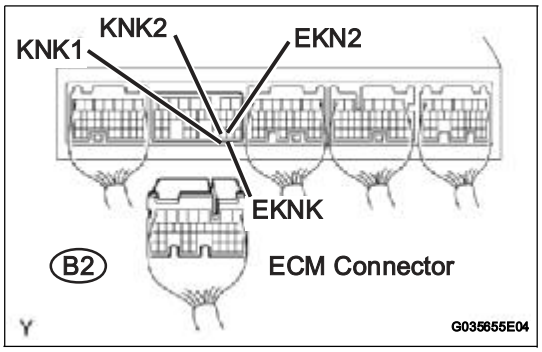

(a) Disconnect the B2 ECM connector.
(b) Turn the ignition switch ON.
(c) Measure the voltage between the ECM terminals.

Standard Voltage

Tester Connections	Specified Conditions
KNK1 (B2-29) - EKNK (B2-28)	4.5 to 5.5 V
KNK2 (B2-21) - EKN2 (B2-20)	

(d) Reconnect the ECM connector.

NG → **REPLACE ECM (See page ES-446)**

OK

CHECK FOR INTERMITTENT PROBLEMS

4 INSPECT KNOCK SENSOR

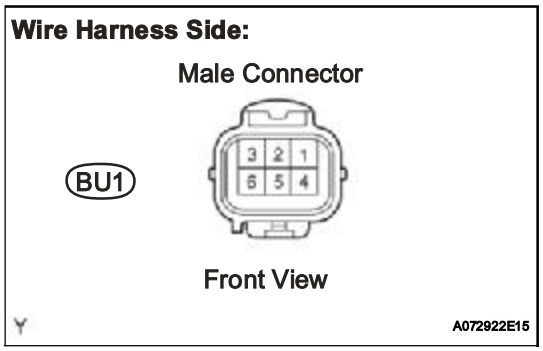

(a) Disconnect the BU1 connector.
(b) Check the resistance between the terminals of the BU1 male connector.

Standard Resistance

Tester Connections	Specified Conditions
BU1 male connector 2 - 5	120 to 280 kΩ
BU1 male connector 4 - 6	

(c) Reconnect the BU1 connector.

OK → **CHECK FOR INTERMITTENT PROBLEMS**

NG

5 CHECK HARNESS AND CONNECTOR (CONNECTOR - KNOCK SENSOR)

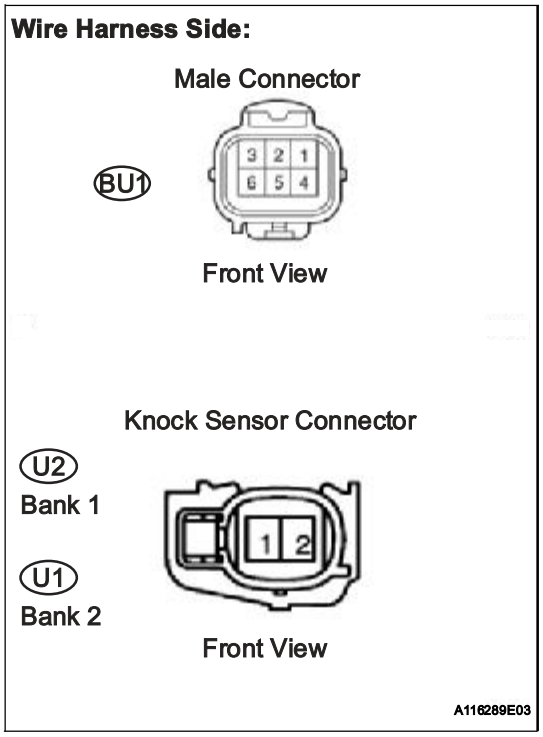

HINT:
- If DTC P0327 or P0328 has changed to P0332 or P0333, check the knock sensor circuit on the right bank side.
- If DTC P0332 or P0333 has changed to P0327 or P0328, check the knock sensor circuit on the left bank side.

(a) Disconnect the BU1 connector.
(b) Disconnect the U1 and U2 knock sensor connectors.
(c) Check the resistance.

Standard Resistance (Check for open)

Tester Connections	Specified Conditions
BU1 male connector 2 - U2-2	Below 1 Ω
BU1 male connector 5 - U2-1	
BU1 male connector 4 - U1-2	
BU1 male connector 6 - U1-1	

Standard Resistance (Check for short)

Tester Connections	Specified Conditions
BU1 male connector 2 or U2-2 - Body ground	10 kΩ or higher
BU1 male connector 5 or U2-1 - Body ground	
BU1 male connector 4 or U1-2 - Body ground	
BU1 male connector 6 or U1-1 - Body ground	

(d) Reconnect the BU1 connector.
(e) Reconnect the knock sensor connector.

NG → **REPAIR OR REPLACE HARNESS OR CONNECTOR**

OK

REPLACE KNOCK SENSOR (See page ES-438)

DTC	P0335	Crankshaft Position Sensor "A" Circuit

DTC	P0339	Crankshaft Position Sensor "A" Circuit Intermittent

DESCRIPTION

The Crankshaft Position (CKP) sensor system consists of a CKP sensor plate and a pickup coil. The sensor plate has 34 teeth and is installed on the crankshaft. The pickup coil is made of an iron core and a magnet.

The sensor plate rotates and, as each tooth passes through the pickup coil, a pulse signal is created. The pickup coil generates 34 signals per engine revolution. Based on these signals, the ECM calculates the crankshaft position and engine RPM. Using these calculations, the fuel injection time and ignition timing are controlled.

ES

DTC No.	DTC Detection Conditions	Trouble Areas
P0335	• No CKP sensor signal to ECM while cranking (1 trip detection logic) • No CKP sensor signal to ECM at engine speed of 600 rpm or more (1 trip detection logic)	• Open or short in CKP sensor circuit • CKP sensor • Sensor plate (CKP sensor plate) • ECM
P0339	Under conditions (a), (b) and (c), no CKP sensor signal to ECM for 0.05 seconds or more (1 trip detection logic) (a) Engine speed 1,000 rpm or more (b) Starter signal OFF (c) 3 seconds or more have elapsed since starter signal switched from ON to OFF	

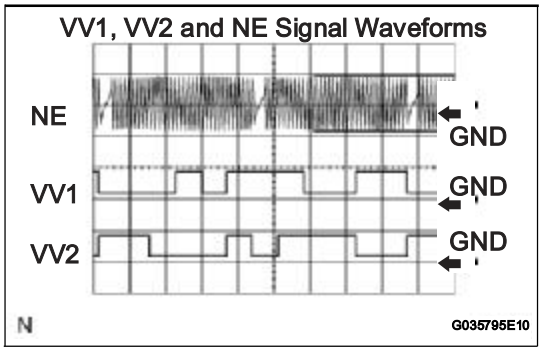

Reference: Inspection using an oscilloscope

HINT:

- The correct waveform is shown above.
- VV1+ and VV2+ stand for the VVT sensor signal, and NE+ stands for the CKP sensor signal.

Items	Contents
Terminals	VV1+ - VV1- VV2+ - VV2- NE+ - NE-
Equipment Settings	5 V/DIV, 20 msec./DIV.
Conditions	Cranking or idling

MONITOR DESCRIPTION

If there is no signal from the CKP sensor despite the engine revolving, the ECM interprets this as a malfunction of the sensor.

If the malfunction is not repaired successfully, a DTC is set 10 seconds after the engine is next started.

MONITOR STRATEGY

Related DTCs	P0335: Crankshaft position sensor range check/rationality
Required Sensors/Components (Main)	Crankshaft Position (CKP) sensor
Required Sensors/Components (Related)	VVT sensor
Frequency of Operation	Continuous
Duration	Conditions met for 3 times
MIL Operation	Immediate
Sequence of Operation	None

TYPICAL ENABLING CONDITIONS

All:

Monitor runs whenever following DTCs not present	None

Case 1:

Time after starter OFF to ON	0.3 seconds or more
Number of VVT sensor signal pulse	6 times
Battery voltage	7 V or more
Ignition switch	ON

Case 2:

Starter	OFF
Engine RPM	600 rpm or more
Time after starter from ON to OFF	3 seconds or more

TYPICAL MALFUNCTION THRESHOLDS

Case 1:

Number of CKP sensor signal pulse	132 or less, or 174 or more

Case 2:

Engine speed signal	No signal

COMPONENT OPERATING RANGE

CKP sensor	• CKP sensor output voltage fluctuates while crankshaft revolving • 34 CKP sensor signals per crankshaft revolution

WIRING DIAGRAM

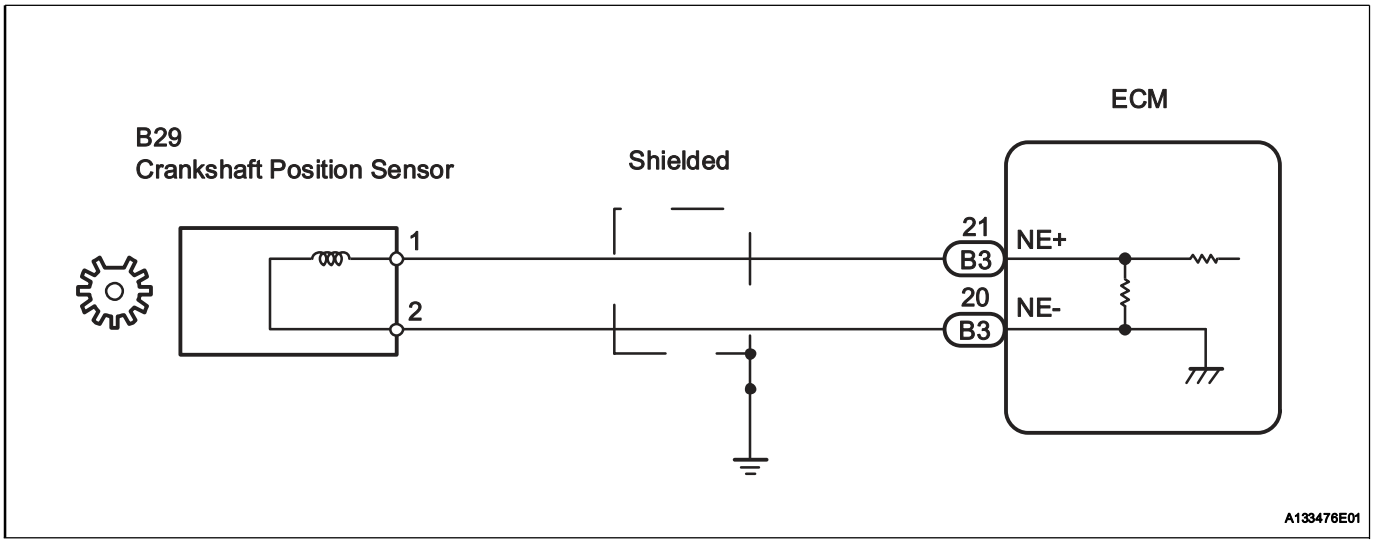

ES

INSPECTION PROCEDURE

HINT:

- If no problem is found by this diagnostic troubleshooting procedure, troubleshoot the engine mechanical systems.
- Check the engine speed. The engine speed can be checked by using an intelligent tester. To check, follow the operation below:
  (a) Connect an intelligent tester to the DLC3.
  (b) Start the engine.
  (c) Turn the tester ON
  (d) Select the following menu items: DIAGNOSIS / ENHANCED OBD II / DATA LIST / PRIMARY / ENGINE SPD.
  The engine speed may be indicated as zero despite the engine revolving normally. This is caused by a lack of NE signals from the Crankshaft Position (CKP) sensor. Alternatively, the engine speed may be indicated as lower than the actual engine speed, if the CKP sensor voltage output is insufficient.
- Read freeze frame data using an intelligent tester. Freeze frame data record the engine condition when malfunctions are detected. When troubleshooting, freeze frame data can help determine if the vehicle was moving or stationary, if the engine was warmed up or not, if the air-fuel ratio was lean or rich, and other data, from the time the malfunction occurred.

1	INSPECT CRANKSHAFT POSITION SENSOR (RESISTANCE)

Component Side:

Crankshaft Position Sensor

Front View

A078431E17

(a) Disconnect the B29 Crankshaft Position (CKP) sensor connector.

(b) Measure the resistance between terminals 1 and 2.

Standard Resistance

Tester Connections	Specified Conditions
1 - 2	1,850 Ω to 2,450 Ω at 20°C (68°F)

(c) Reconnect the CKP sensor connector.

NG → **REPLACE CRANKSHAFT POSITION SENSOR (See page ES-420)**

OK

2	CHECK HARNESS AND CONNECTOR (CRANKSHAFT POSITION SENSOR - ECM)

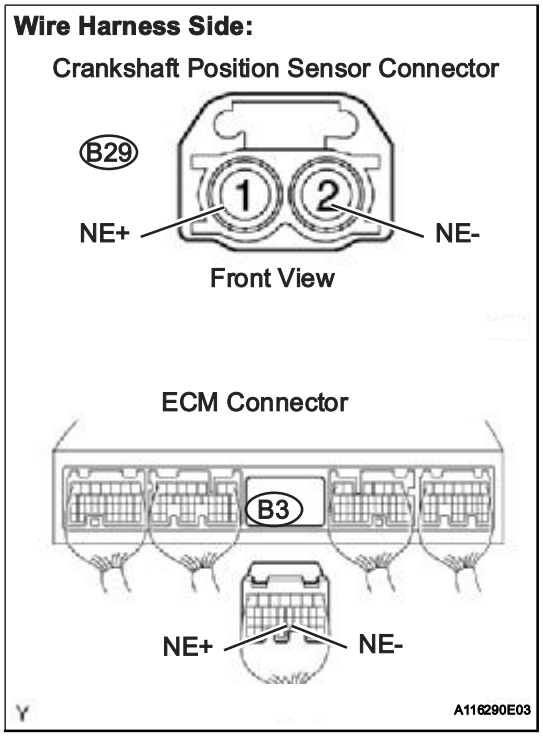

(a) Disconnect the B29 CKP sensor connector.
(b) Disconnect the B3 ECM connector.
(c) Check the resistance.

Standard Resistance (Check for open)

Tester Connections	Specified Conditions
NE+ (B29-1) - NE+ (B3-21)	Below 1 Ω
NE- (B29-2) - NE- (B3-20)	

Standard Resistance (Check for short)

Tester Connections	Specified Conditions
NE+ (B29-1) or NE+ (B3-21) - Body ground	10 kΩ or higher
NE- (B29-2) or NE- (B3-20) - Body ground	

(d) Reconnect the ECM connector.
(e) Reconnect the CKP sensor connector.

NG → **REPAIR OR REPLACE HARNESS OR CONNECTOR**

OK

3	CHECK SENSOR INSTALLATION (CRANKSHAFT POSITION SENSOR)

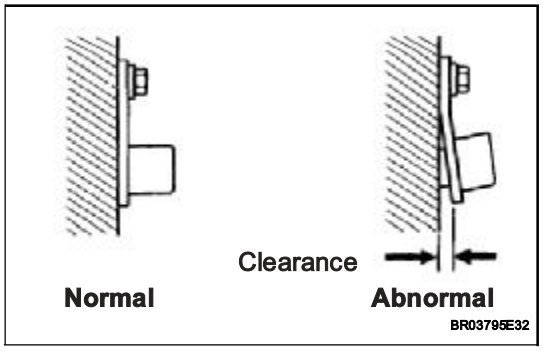

(a) Check the CKP sensor installation.
OK:
Sensor is installed correctly.

NG → **TIGHTEN SENSOR**

OK

4	CHECK CRANKSHAFT POSITION SENSOR PLATE (TEETH OF SENSOR PLATE (CRANKSHAFT))

(a) Check the teeth of the sensor plate.
OK:
Sensor plate does not have any cracks or deformation.

NG → **REPLACE CRANKSHAFT POSITION SENSOR PLATE**

OK

REPLACE ECM (See page ES-446)

DTC	**P0340**	**Camshaft Position Sensor "A" Circuit (Bank 1 or Single Sensor)**

DTC	**P0342**	**Camshaft Position Sensor "A" Circuit Low Input (Bank 1 or Single Sensor)**

DTC	**P0343**	**Camshaft Position Sensor "A" Circuit High Input (Bank 1 or Single Sensor)**

DTC	**P0345**	**Camshaft Position Sensor "A" Circuit (Bank 2)**

DTC	**P0347**	**Camshaft Position Sensor "A" Circuit Low Input (Bank 2)**

DTC	**P0348**	**Camshaft Position Sensor "A" Circuit High Input (Bank 2)**

DESCRIPTION

The intake camshaft's Variable Valve Timing (VVT) sensor (G signal) consists of a magnet and MRE (Magneto Resistance Element).

The VVT camshaft drive gear has a sensor plate with 3 teeth on its outer circumference. When the gear rotates, changes occur in the air gaps between the sensor plate and MRE, which affects the magnetic field. As a result, the resistance of the MRE material fluctuates. The VVT sensor converts the gear rotation data to pulse signals, uses the pulse signals to determine the camshaft angle, and sends it to the ECM.

The crankshaft angle sensor plate has 34 teeth. The pickup coil generates 34 signals for each engine revolution. Based on the combination of the G signal and NE signal, the ECM detects the crankshaft angle. Then the ECM uses this data to control fuel injection time and injection timing. Also, based on the NE signal, the ECM detects the engine speed.

DTC No.	DTC Detection Conditions	Trouble Areas
P0340 P0345	• Input voltage to ECM remains 0.3 V or less, or 4.7 V or higher for more than 5 seconds, when 2 or more seconds have elapsed after turning ignition switch ON (1 trip detection logic) • No VVT sensor signal to ECM during cranking (2 trip detection logic)	• Open or short in VVT sensor circuit • VVT sensor • Camshaft timing gear • Jumped tooth of timing chain • ECM
P0342 P0347	Output voltage of VVT sensor 0.3 V or less for 5 seconds (1 trip detection logic)	
P0343 P0348	Output voltage of VVT sensor 4.7 V or more for 5 seconds (1 trip detection logic)	

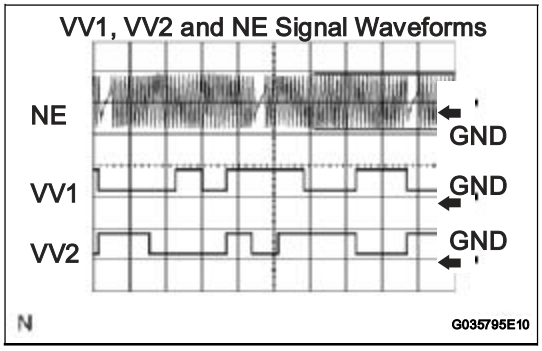

Reference: Inspection using an oscilloscope
HINT:

- The correct waveform is shown above.
- VV1+ and VV2+ stand for the VVT sensor signal, and NE+ stands for the CKP sensor signal.

Items	Contents
Terminals	NE+ - NE- VV1+ - VV1- VV2+ - VV2-
Equipment Settings	5 V/Division, 20 ms/Division
Conditions	Cranking or idling

MONITOR DESCRIPTION

If no signal is transmitted by the VVT sensor despite the engine revolving, or the rotations of the camshaft and the crankshaft are not synchronized, the ECM interprets this as a malfunction of the sensor.

MONITOR STRATEGY

Related DTCs	P0340: VVT sensor (Bank 1) range check P0340: Camshaft position/Crankshaft position misalignment (Bank 1) P0340: VVT sensor (Bank 1) range check (fluctuating) P0342: VVT sensor (Bank 1) range check (low voltage) P0343: VVT sensor (Bank 1) range check (high voltage) P0345: VVT sensor (Bank 2) range check (while starting engine) P0345: VVT sensor (Bank 2) range check (after starting engine) P0345: VVT sensor (Bank 2) range check (fluctuating) P0347: VVT sensor (Bank 2) range check (low voltage) P0348: VVT sensor (Bank 2) range check (high voltage)
Required Sensors/Components (Main)	VVT sensors (Banks 1 and 2)
Required Sensors/Components (Related)	Crankshaft position sensor
Frequency of Operation	Continuous
Duration	4 seconds: P0340 (VVT sensor (Bank 1) range check and VVT sensor (Bank 1) range check (fluctuating)), P0342, P0343 and P0345 (VVT sensor range check (while starting engine)) 5 seconds: Others
MIL Operation	2 driving cycles: P0340 (VVT sensor range check), P0345 (VVT sensor range check (while starting engine)) Immediate: Others
Sequence of Operation	None

TYPICAL ENABLING CONDITIONS

All:

Monitor runs whenever following DTCs not present	None

VVT Sensor Range Check:

Starter	ON
Minimum battery voltage while starter ON	Less than 11 V

Camshaft Position/Crankshaft Position Misalignment:

Engine RPM	600 rpm or more
Starter	OFF

VVT Sensor Range Check (Fluctuating, Low voltage, High voltage):

Starter	OFF
Ignition switch ON and time after ignition switch changed from OFF to ON	2 seconds or more

VVT Sensor Range Check (While starting engine):

Starter	ON
Battery voltage while starter ON once at least	Less than 11 V

VVT Sensor Range Check (After starting engine):

Engine RPM	600 rpm or more
Starter	OFF
Battery voltage	8 V or more
Ignition switch	ON

VVT Sensor Range Check (Fluctuating, Low voltage, High voltage):

Starter	OFF
Ignition switch ON and time after ignition switch changed from OFF to ON	2 seconds or more
Battery voltage	8 V or more

TYPICAL MALFUNCTION THRESHOLDS

VVT Sensor Range Check:

VVT sensor signal	No signal

Camshaft Position/Crankshaft Position Misalignment:

Camshaft position and crankshaft position phases	Mis-aligned

VVT Sensor Range Check (Fluctuating):

VVT sensor voltage	Less than 0.3 V, or more than 4.7 V

VVT Sensor Range Check (Low voltage):

VVT sensor voltage	Less than 0.3 V

VVT Sensor Range Check (High voltage):

VVT sensor voltage	More than 4.7 V

VVT Sensor Range Check (While starting engine):

VVT sensor signal	No signal

VVT Sensor Range Check (After starting engine):

VVT sensor signal	No signal

VVT Sensor Range Check (Fluctuating):

VVT sensor voltage	Less than 0.3 V, or more than 4.7 V

VVT Sensor Range Check (Low voltage):

VVT sensor voltage	Less than 0.3 V

VVT Sensor Range Check (High voltage):

VVT sensor voltage	More than 4.7 V

COMPONENT OPERATING RANGE

VVT sensor voltage	0.3 to 4.7 V

WIRING DIAGRAM

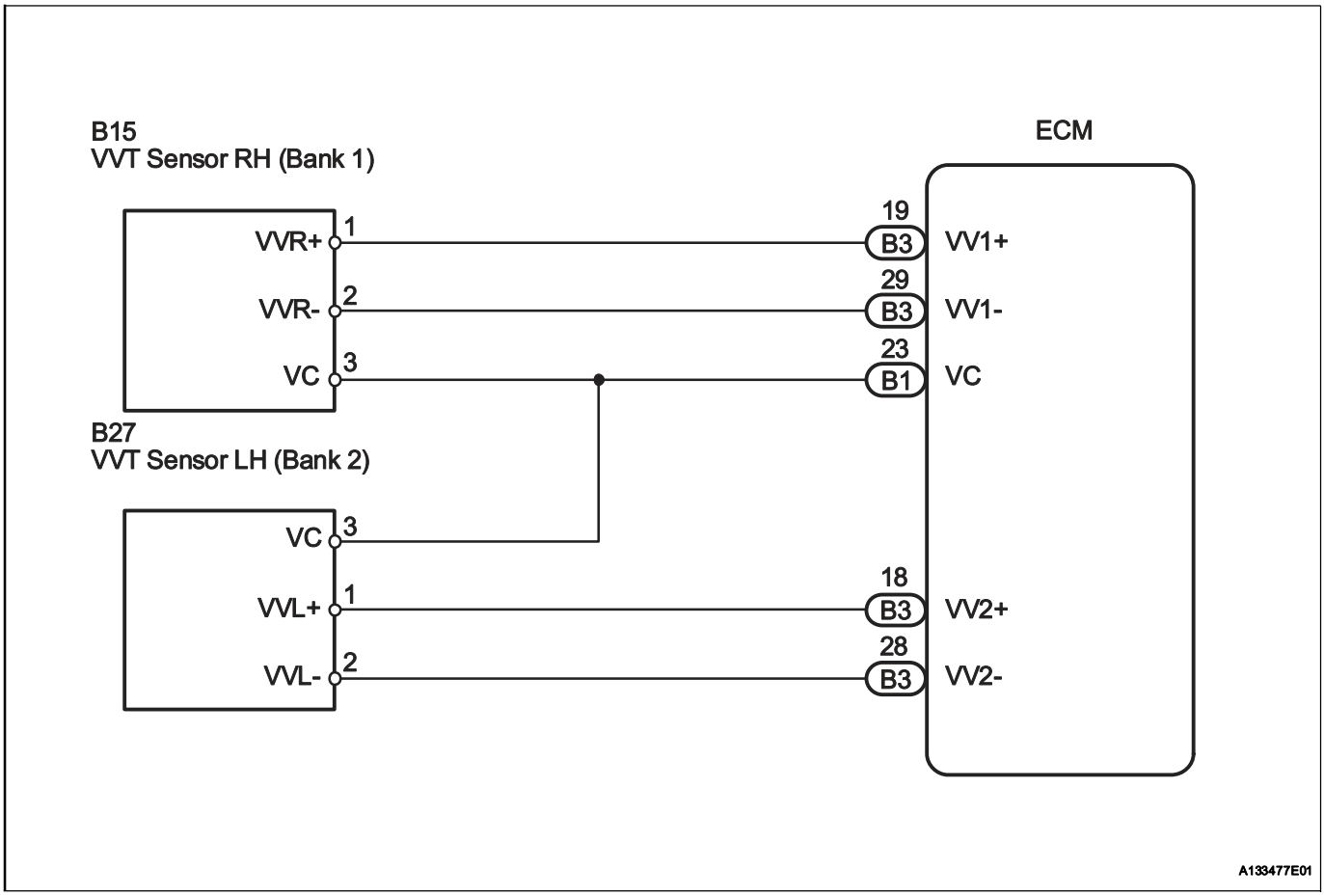

INSPECTION PROCEDURE

HINT:

Read freeze frame data using an intelligent tester. Freeze frame data records the engine conditions when a malfunction is detected. When troubleshooting, freeze frame data can help determine if the vehicle was running or stopped, if the engine was warmed up or not, if the air-fuel ratio was lean or rich, and other data from the time the malfunction occurred.

1 CHECK ECM TERMINAL VOLTAGE

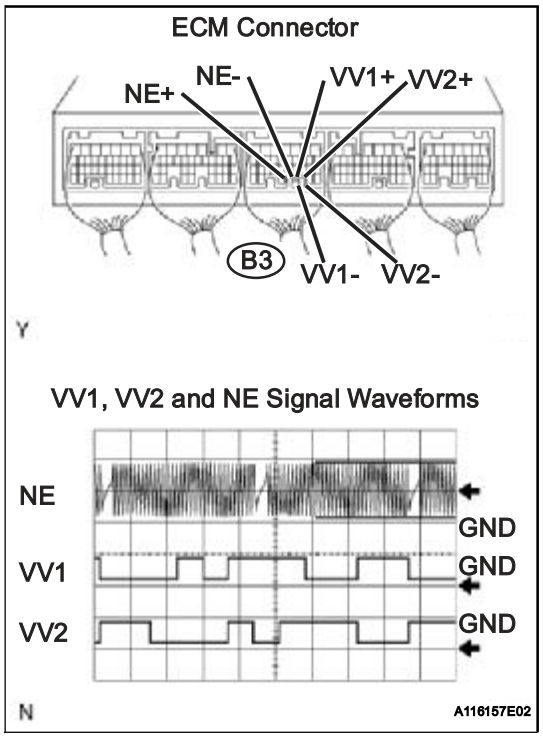

(a) Inspect the ECM using an oscilloscope.

Items	Contents
Terminals	NE+ - NE- VV1+ - VV1- VV2+ - VV2-
Equipment Settings	5 V/Division, 20 ms/Division
Conditions	Cranking or idling

(1) While the engine is idling, check the waveform between the terminals of the ECM connector.

Standard

Tester Connections	Specified Conditions
VV1+ (B3-19) - VV1- (B3-29)	Correct waveform as shown in illustration
VV2+ (B3-18) - VV2- (B3-28)	
NE+ (B3-21) - NE- (B3-20)	

OK → **CHECK FOR INTERMITTENT PROBLEMS**

NG

2 CHECK VVT SENSOR (SENSOR POWER SOURCE)

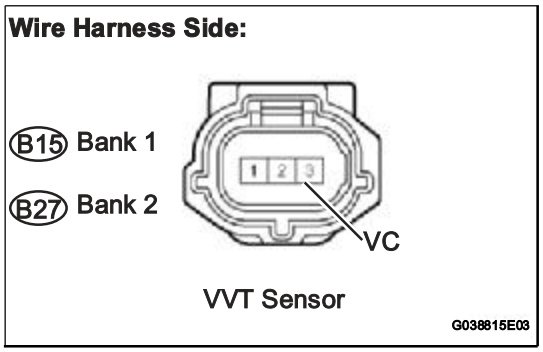

(a) Disconnect the B15 or B27 VVT sensor connector.

(b) Measure the voltage between the terminals of the VVT sensor.

Standard Voltage

Tester Connection	Specified Condition
VC (3) - Body ground	4.5 to 5.5 V

(c) Reconnect the VVT sensor connector.

NG → **REPAIR OR REPLACE POWER SOURCE CIRCUIT**

OK

ES

3 CHECK HARNESS AND CONNECTOR (VVT SENSOR - ECM)

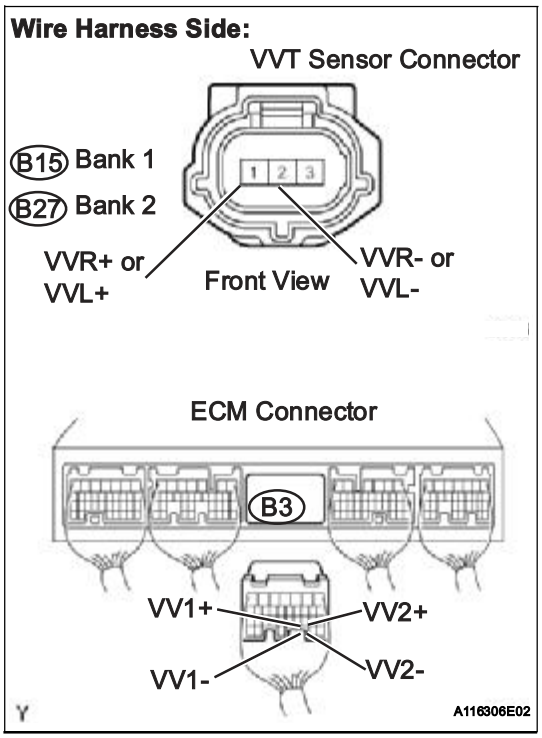

(a) Disconnect the B15 or B27 VVT sensor connector.
(b) Disconnect the B3 ECM connector.
(c) Check the resistance.

Standard Resistance (Check for open)

Tester Connections	Specified Conditions
VVR+ (B15-1) - VV1+ (B3-19)	Below 1 Ω
VVL+ (B27-1) - VV2+ (B3-18)	
VVR- (B15-2) - VV1- (B3-29)	
VVL- (B27-2) - VV2- (B3-28)	

Standard Resistance (Check for short)

Tester Connections	Specified Conditions
VVR+ (B15-1) or VV1+ (B3-19) - Body ground	10 kΩ or higher
VVL+ (B27-1) or VV2+ (B3-18) - Body ground	
VVR- (B15-2) or VV1- (B3-29) - Body ground	
VVL- (B27-2) or VV2- (B3-28) - Body ground	

(d) Reconnect the VVT sensor connector.
(e) Reconnect the ECM connector.

NG → **REPAIR OR REPLACE HARNESS OR CONNECTOR**

OK

4 CHECK SENSOR INSTALLATION (VVT SENSOR)

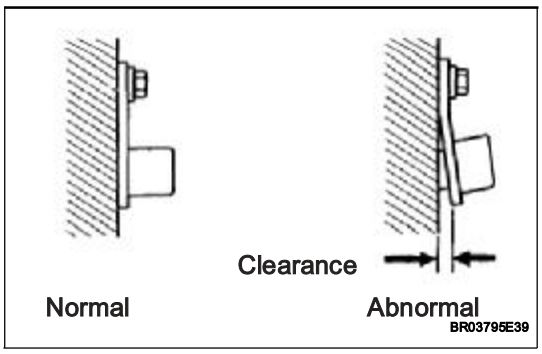

(a) Check the VVT sensor installation.
OK:
Sensor is installed correctly.

NG → **SECURELY REINSTALL SENSOR**

OK

5 CHECK VALVE TIMING (See page ES-79)

NG → **ADJUST VALVE TIMING**

OK

6	CHECK CAMSHAFT TIMING GEAR ASSEMBLY (TEETH PLATE)

(a) Check the teeth of the signal plate.
OK:
Sensor plate teeth do not have any cracks or deformation.

NG → **REPLACE CAMSHAFT TIMING GEAR ASSEMBLY**

OK

7	REPLACE VVT SENSOR

NEXT

8	CHECK WHETHER DTC OUTPUT RECURS (DTC P0340, P0342, P0343, P0345, P0347 AND/OR P0348)

(a) Connect the intelligent tester to the DLC3.
(b) Turn the ignition switch ON.
(c) Turn the tester ON.
(d) Clear DTCs (See page ES-38).
(e) Start the engine.
(f) Select the following menu items: DIAGNOSIS / ENHANCED OBD II / DTC INFO / PENDING CODES.
(g) Read DTCs.

Result

Display (DTC Output)	Proceed To
No output	A
P0340, P0342, P0343, P0345, P0347 and/or P0348	B

HINT:
If the engine does not start, replace the ECM.

B → **REPLACE ECM (See page ES-446)**

A

END

DTC	P0351	Ignition Coil "A" Primary / Secondary Circuit
DTC	P0352	Ignition Coil "B" Primary / Secondary Circuit
DTC	P0353	Ignition Coil "C" Primary / Secondary Circuit
DTC	P0354	Ignition Coil "D" Primary / Secondary Circuit
DTC	P0355	Ignition Coil "E" Primary / Secondary Circuit
DTC	P0356	Ignition Coil "F" Primary / Secondary Circuit

HINT:
- These DTCs indicate malfunctions relating to the primary circuit.
- If DTC P0351 is set, check No. 1 ignition coil with igniter circuit.
- If DTC P0352 is set, check No. 2 ignition coil with igniter circuit.
- If DTC P0353 is set, check No. 3 ignition coil with igniter circuit.
- If DTC P0354 is set, check No. 4 ignition coil with igniter circuit.
- If DTC P0355 is set, check No. 5 ignition coil with igniter circuit.
- If DTC P0356 is set, check No. 6 ignition coil with igniter circuit.

DESCRIPTION

A Direct Ignition System (DIS) is used on this vehicle.
The DIS is a 1-cylinder ignition system in which each cylinder is ignited by one ignition coil and one spark plug is connected to the end of each secondary wiring. A powerful voltage, generated in the secondary wiring, is applied directly to each spark plug. The sparks of the spark plugs pass from the center electrodes to the ground electrodes.
The ECM determines the ignition timing and transmits the ignition (IGT) signals to each cylinder. Using the IGT signal, the ECM turns the power transistor inside the igniter on and off. The power transistor, in turn, switches on and off the current to the primary coil. When the current to the primary coil is cut off, a powerful voltage is generated in the secondary coil. This voltage is applied to the spark plugs, causing them to spark inside the cylinders. As the ECM cuts the current to the primary coil, the igniter sends back an ignition confirmation (IGF) signal to the ECM, for each cylinder ignition.

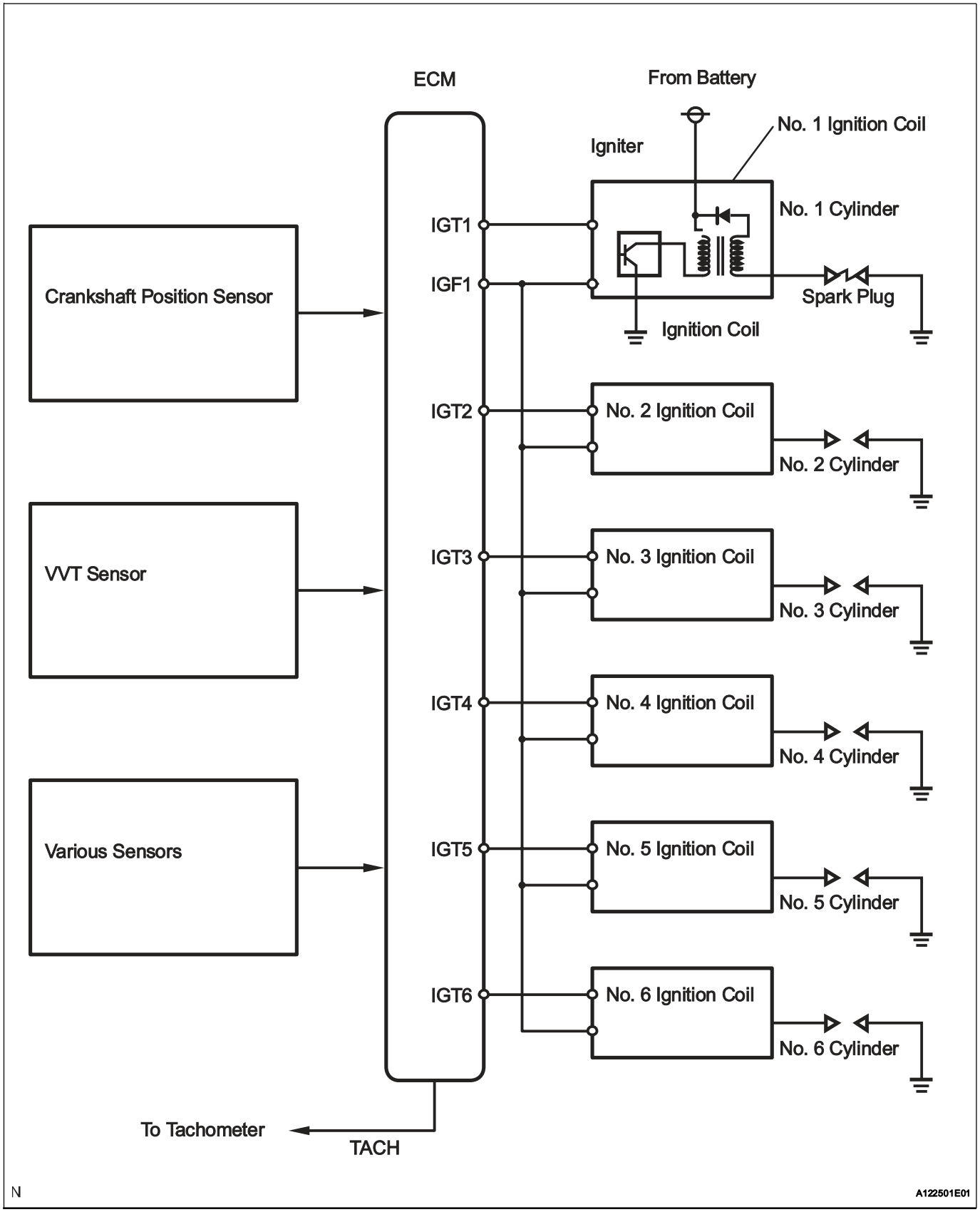
ECM
From Battery
Igniter
No. 1 Ignition Coil
No. 1 Cylinder
IGT1
IGF1
Spark Plug
Ignition Coil
Crankshaft Position Sensor
IGT2
No. 2 Ignition Coil
No. 2 Cylinder
VVT Sensor
IGT3
No. 3 Ignition Coil
No. 3 Cylinder
IGT4
No. 4 Ignition Coil
No. 4 Cylinder
Various Sensors
IGT5
No. 5 Ignition Coil
No. 5 Cylinder
IGT6
No. 6 Ignition Coil
No. 6 Cylinder
To Tachometer
TACH
N
A122501E01

ES

DTC No.	DTC Detection Conditions	Trouble Areas
P0351 P0352 P0353 P0354 P0355 P0356	No IGF signal to ECM while engine running (1 trip detection logic)	• Ignition system • Open or short in IGF1 or IGT circuit (1 to 6) between ignition coil with igniter and ECM • No. 1 to No. 6 ignition coils with igniters • ECM

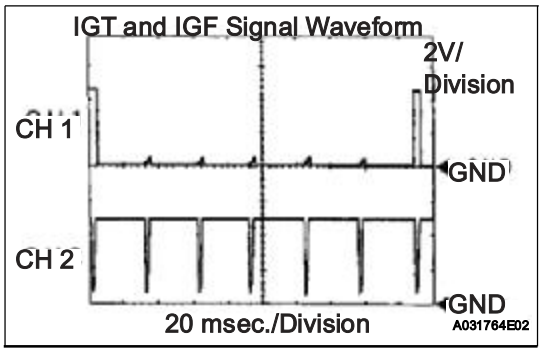

Reference: Inspection using an oscilloscope
While cranking or idling, check the waveform between terminals IGT(1 to 6) and E1, and IGF1 and E1 of the ECM connector.

Items	Contents
Terminals	CH1: IGT1, IGT2, IGT3, IGT4, IGT5, IGT6 - E1 CH2: IGF1 - E1
Equipment Settings	2 V/Division, 20 ms/Division
Conditions	Cranking or idling

MONITOR DESCRIPTION

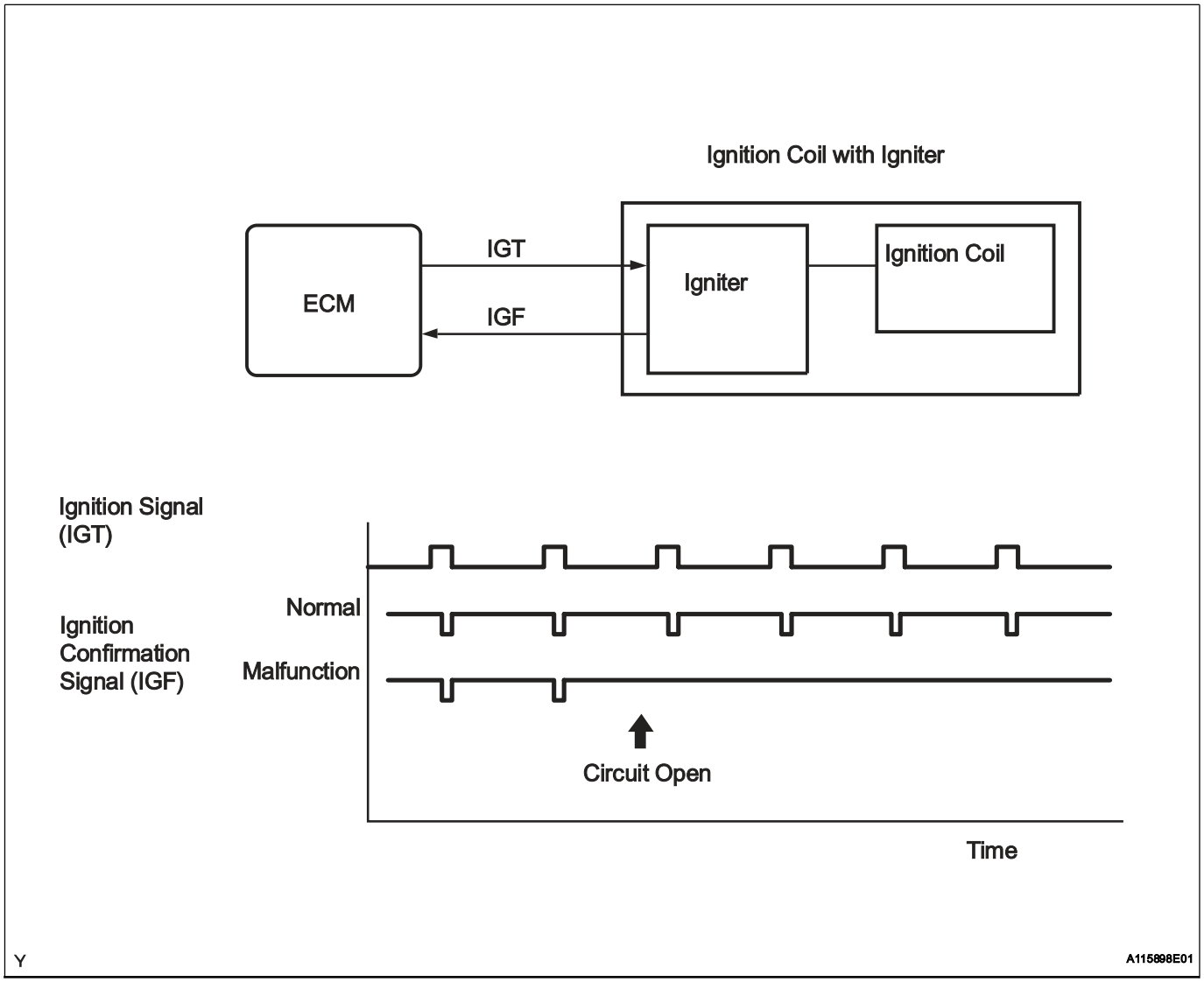

If the ECM does not receive any IGF signals despite transmitting the IGT signal, it interprets this as a fault in the igniter and sets a DTC.
If the malfunction is not repaired successfully, a DTC is set 1second after the engine is next started.

MONITOR STRATEGY

Related DTCs	P0351: Igniter (Cylinder 1) malfunction P0352: Igniter (Cylinder 2) malfunction P0353: Igniter (Cylinder 3) malfunction P0354: Igniter (Cylinder 4) malfunction P0355: Igniter (Cylinder 5) malfunction P0356: Igniter (Cylinder 6) malfunction
Required Sensors/Components (Main)	Igniter (Cylinder 1 to 6)
Required Sensors/Components (Related)	Crankshaft position sensor
Frequency of Operation	Continuous
Duration	0.256 seconds and 4 sparks
MIL Operation	Immediate
Sequence of Operation	None

TYPICAL ENABLING CONDITIONS

Monitor runs whenever following DTCs not present	None
Either of following conditions 1 or 2 met	-
1. Following conditions (a) and (b) met:	-
(a) Engine RPM	500 rpm or less
(b) Battery voltage	6 V or more
2. Following conditions (a) and (b) met:	-
(a) Engine RPM	More than 500 rpm
(b) Battery voltage	10 V or more
(c) Number of sparks after CPU is reset	5 sparks or more

TYPICAL MALFUNCTION THRESHOLDS

Ignition signal fail count	More than 2 times
Ignition signal fail count is on the right:	When IGF does not return despite sending IGT.

COMPONENT OPERATING RANGE

IGF signal	Igniter transmits IGF signal when it receives IGT signal from ECM

WIRING DIAGRAM

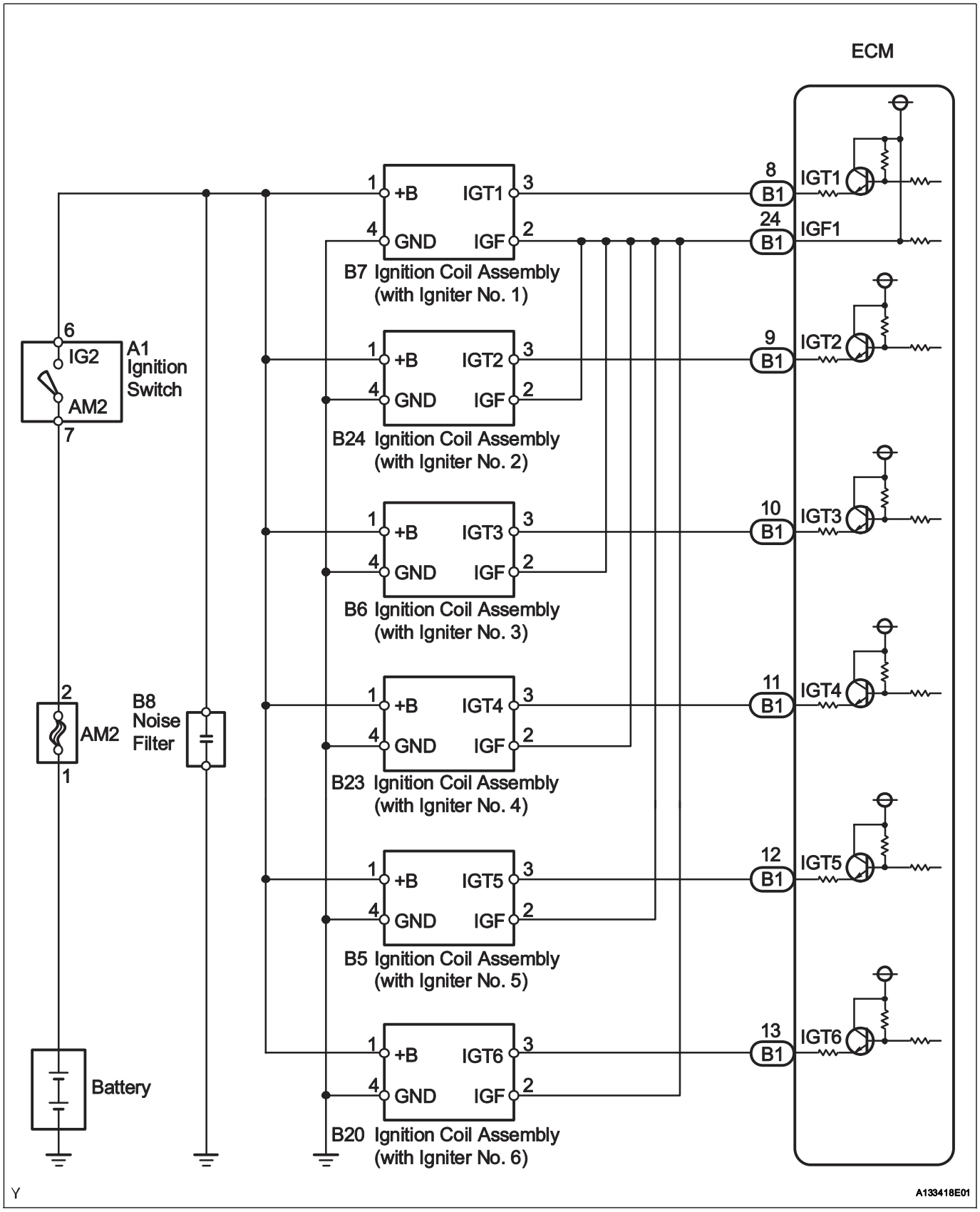

INSPECTION PROCEDURE

HINT:
Read freeze frame data using an intelligent tester. Freeze frame data record the engine condition when malfunctions are detected. When troubleshooting, freeze frame data can help determine if the vehicle was moving or stationary, if the engine was warmed up or not, if the air-fuel ratio was lean or rich, and other data, from the time the malfunction occurred.

ES

1	CHECK SPARK PLUG AND SPARK OF MISFIRING CYLINDER

(a) Check the spark plug and sparks of the misfiring cylinder (See page IG-3).

NG → Go to step 4

OK

2	CHECK HARNESS AND CONNECTOR (IGNITION COIL ASSEMBLY - ECM (IGF1 SIGNAL TERMINAL))

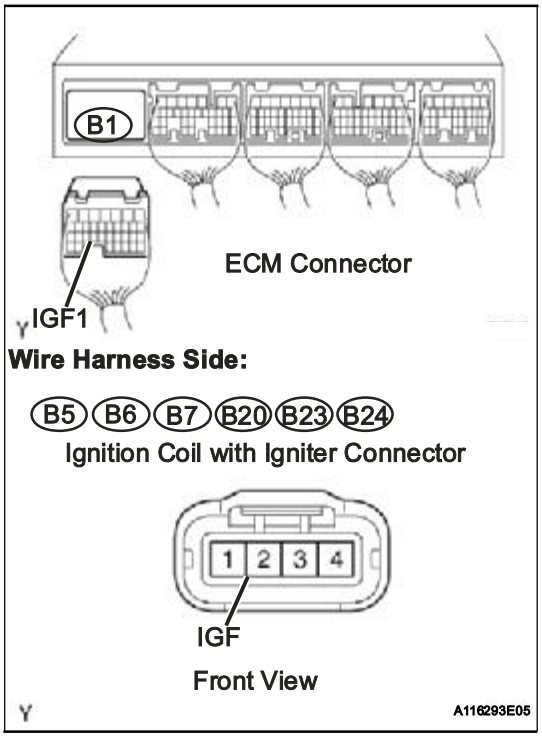

(a) Disconnect the B5, B6, B7, B20, B23 or B24 ignition coil with igniter connector.
(b) Disconnect the B1 ECM connector.
(c) Check the resistance.

Standard Resistance (Check for open)

Tester Connections	Specified Conditions
IGF (B7-2) - IGF1 (B1-24)	Below 1 Ω
IGF (B24-2) - IGF1 (B1-24)	
IGF (B6-2) - IGF1 (B1-24)	
IGF (B23-2) - IGF1 (B1-24)	
IGF (B5-2) - IGF1 (B1-24)	
IGF (B20-2) - IGF1 (B1-24)	

Standard Resistance (Check for short)

Tester Connections	Specified Conditions
IGF (B7-2) or IGF1 (B1-24) - Body ground	10 kΩ or higher
IGF (B24-2) or IGF1 (B1-24) - Body ground	
IGF (B6-2) or IGF1 (B1-24) - Body ground	
IGF (B23-2) or IGF1 (B1-24) - Body ground	
IGF (B5-2) or IGF1 (B1-24) - Body ground	
IGF (B20-2) or IGF1 (B1-24) - Body ground	

(d) Reconnect the ECM connector.
(e) Reconnect the ignition coil with igniter connector.

NG → REPAIR OR REPLACE HARNESS OR CONNECTOR

OK

3 INSPECT ECM (IGF1 VOLTAGE)

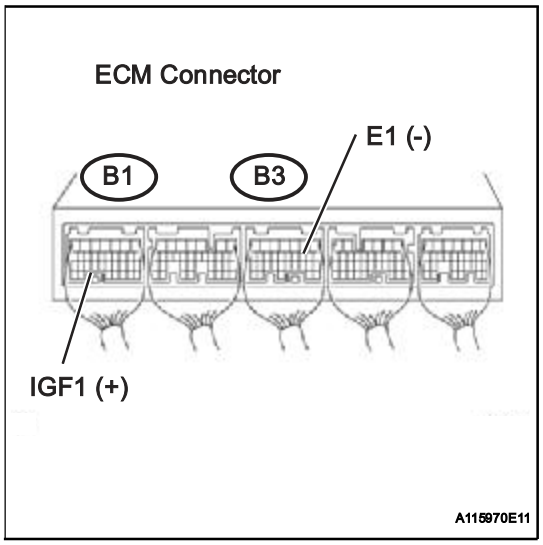

(a) Disconnect the ignition coil connector.
(b) Turn the ignition switch ON.
(c) Measure the voltage between the terminals of the B1 and B3 ECM connectors.

Standard Voltage

Tester Connection	Specified Condition
IGF1 (B1-24) - E1 (B3-1)	4.5 to 5.5 V

(d) Reconnect the ignition coil connector.

NG → **REPLACE ECM (See page ES-446)**

OK

REPLACE IGNITION COIL ASSEMBLY

4 CHECK HARNESS AND CONNECTOR (IGNITION COIL ASSEMBLY - ECM (IGT SIGNAL TERMINAL))

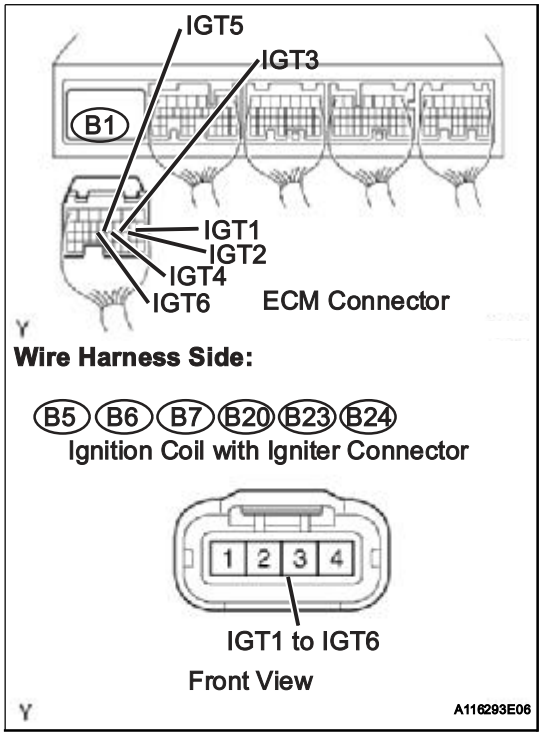

(a) Disconnect the B5, B6, B7, B20, B23 or B24 ignition coil with igniter connector.
(b) Disconnect the B1 ECM connector.
(c) Check the resistance.

Standard Resistance (Check for open)

Tester Connections	Specified Conditions
IGT1 (B7-3) - IGT1 (B1-8)	Below 1 Ω
IGT2 (B24-3) - IGT2 (B1-9)	
IGT3 (B6-3) - IGT3 (B1-10)	
IGT4 (B23-3) - IGT4 (B1-11)	
IGT5 (B5-3) - IGT5 (B1-12)	
IGT6 (B20-3) - IGT6 (B1-13)	

Standard Resistance (Check for short)

Tester Connections	Specified Conditions
IGT1 (B7-3) or IGT1 (B1-8) - Body ground	10 kΩ or higher
IGT2 (B24-3) or IGT2 (B1-9) - Body ground	
IGT3 (B6-3) or IGT3 (B1-10) - Body ground	
IGT4 (B23-3) or IGT4 (B1-11) - Body ground	
IGT5 (B5-3) or IGT5 (B1-12) - Body ground	
IGT6 (B20-3) or IGT6 (B1-13) - Body ground	

(d) Reconnect the ECM connector.
(e) Reconnect the ignition coil with igniter connector.

NG → **REPAIR OR REPLACE HARNESS OR CONNECTOR**

OK

5 INSPECT ECM (IGT1, IGT2, IGT3, IGT4, IGT5, OR IGT6 VOLTAGE)

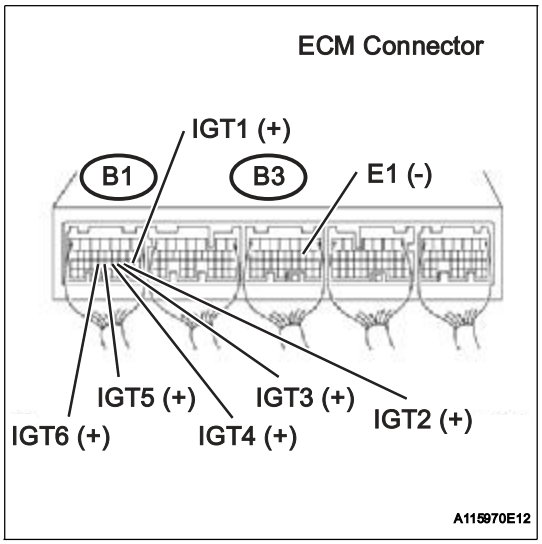

(a) Turn the ignition switch ON.
(b) Measure the voltage between the terminals of the B1 and B3 ECM connectors.
Standard Voltage

Tester Connections	Specified Conditions
IGT1 (B1-8) - E1 (B3-1)	0.1 to 4.5 V
IGT2 (B1-9) - E1 (B3-1)	
IGT3 (B1-10) - E1 (B3-1)	
IGT4 (B1-11) - E1 (B3-1)	
IGT5 (B1-12) - E1 (B3-1)	
IGT6 (B1-13) - E1 (B3-1)	

NG → **REPLACE ECM (See page ES-446)**

OK

6 INSPECT ECM (IGT1, IGT2, IGT3, IGT4, IGT5, OR IGT6 VOLTAGE)

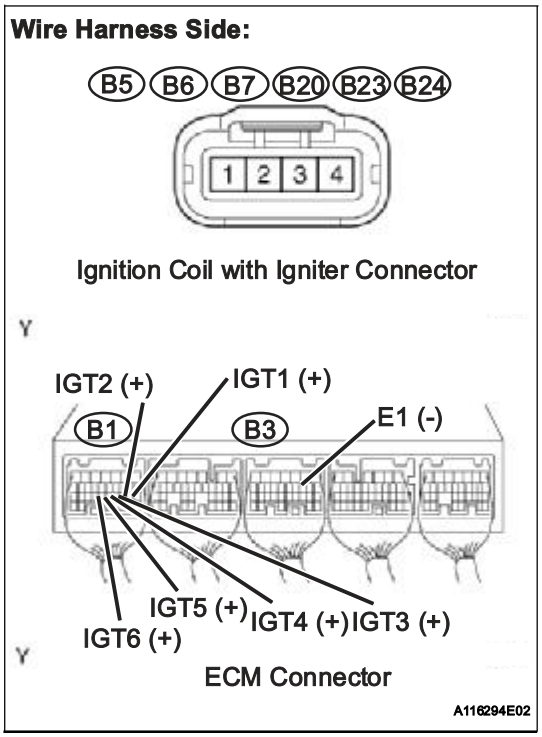

(a) Disconnect the B5, B6, B7, B20, B23 or B24 ignition coil connector.
(b) Turn the ignition switch ON.
(c) Measure the voltage between the terminals of the B1 and B3 ECM connectors.
Standard Voltage

Tester Connections	Specified Conditions
IGT1 (B1-8) - E1 (B3-1)	4.5 V or more
IGT2 (B1-9) - E1 (B3-1)	
IGT3 (B1-10) - E1 (B3-1)	
IGT4 (B1-11) - E1 (B3-1)	
IGT5 (B1-12) - E1 (B3-1)	
IGT6 (B1-13) - E1 (B3-1)	

(d) Reconnect the ignition coil connector.

NG → **Go to step 8**

OK

7 INSPECT IGNITION COIL ASSEMBLY (POWER SOURCE)

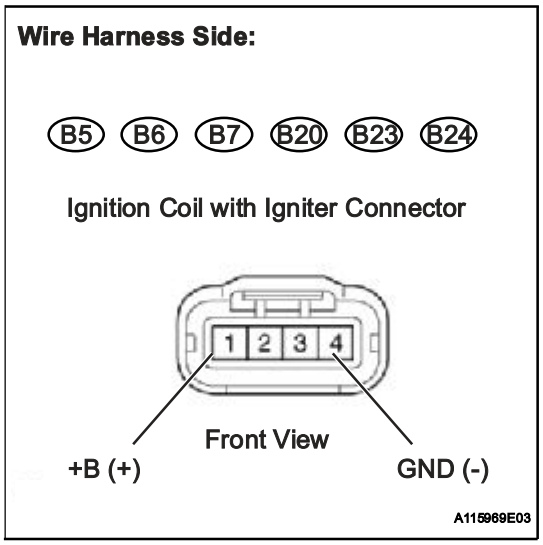

(a) Disconnect the B5, B6, B7, B20, B23 or B24 ignition coil with igniter connector.

(b) Check the resistance.

Standard Resistance (Check for open)

Tester Connections	Specified Conditions
GND (B7-4) - Body ground	Below 1 Ω
GND (B24-4) - Body ground	
GND (B6-4) - Body ground	
GND (B23-4) - Body ground	
GND (B5-4) - Body ground	
GND (B20-4) - Body ground	

(c) Turn the ignition switch ON.

(d) Measure the voltage between the terminals of the wire harness side connector.

Standard Voltage

Tester Connections	Specified Conditions
+B (B7-1) - GND (B7-4)	11 to 14 V
+B (B24-1) - GND (B24-4)	
+B (B6-1) - GND (B6-4)	
+B (B23-1) - GND (B23-4)	
+B (B5-1) - GND (B5-4)	
+B (B20-1) - GND (B20-4)	

(e) Reconnect the ignition coil with igniter connector.

OK → **REPLACE IGNITION COIL ASSEMBLY**

NG

8	CHECK HARNESS AND CONNECTOR (IGNITION COIL ASSEMBLY - IGNITION SWITCH)

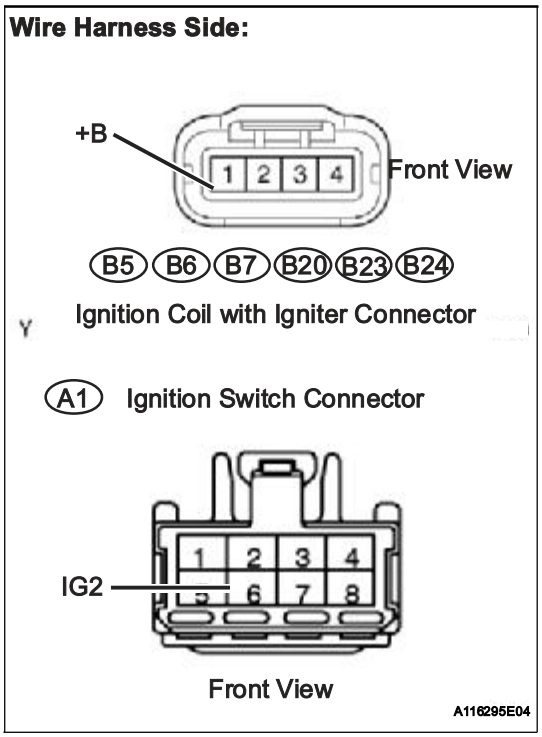

(a) Disconnect the B5, B6, B7, B20, B23 or B24 ignition coil with igniter connector.
(b) Disconnect the A1 ignition switch connector.
(c) Check the resistance.

Standard Resistance (Check for open)

Tester Connections	Specified Conditions
+B (B7-1) - IG2 (A1-6)	Below 1 Ω
+B (B24-1) - IG2 (A1-6)	
+B (B6-1) - IG2 (A1-6)	
+B (B23-1) - IG2 (A1-6)	
+B (B5-1) - IG2 (A1-6)	
+B (B20-1) - IG2 (A1-6)	

Standard Resistance (Check for short)

Tester Connections	Specified Conditions
+B (B7-1) or IG2 (A1-6) - Body ground	10 kΩ or higher
+B (B24-1) or IG2 (A1-6) - Body ground	
+B (B6-1) or IG2 (A1-6) - Body ground	
+B (B23-1) or IG2 (A1-6) - Body ground	
+B (B5-1) or IG2 (A1-6) - Body ground	
+B (B20-1) or IG2 (A1-6) - Body ground	

(d) Reconnect the ignition coil with igniter connector.
(e) Reconnect the ignition switch connector.

NG → **REPAIR OR REPLACE HARNESS OR CONNECTOR**

OK

REPLACE IGNITION COIL ASSEMBLY

DTC	P0420	Catalyst System Efficiency Below Threshold (Bank 1)

DTC	P0430	Catalyst System Efficiency Below Threshold (Bank 2)

MONITOR DESCRIPTION

The ECM uses sensors mounted in front of and behind the Three-Way Catalytic Converter (TWC) to monitor its efficiency.
The first sensor, the Air-Fuel Ratio (A/F) sensor, sends pre-catalyst information to the ECM. The second sensor, the Heated Oxygen (HO2) sensor, sends post-catalyst information to the ECM.
In order to detect any deterioration in the TWC, the ECM calculates the Oxygen Storage Capacity (OSC) of the TWC. This calculation is based on the voltage output of the HO2 sensor while performing active air-fuel ratio control, rather than the conventional detecting method, which uses the locus ratio.
The OSC value is an indication of the oxygen storage capacity of the TWC. When the vehicle is being driven with a warm engine, active air-fuel ratio control is performed for approximately 15 to 20 seconds. When it is performed, the ECM deliberately sets the air-fuel ratio to lean or rich levels. If a rich-lean cycle of the HO2 sensor is long, the OSC becomes greater. There is a direct correlation between the OSCs of the HO2 sensor and the TWC.
The ECM uses the OSC value to determine the state of the TWC. If any deterioration has occurred, it illuminates the MIL and sets a DTC.

DTC No.	DTC Detection Conditions	Trouble Areas
P0420	OSC value smaller than standard value under active air-fuel ratio control (2 trip detection logic)	• Gas leakage from exhaust system • A/F sensor (bank 1 sensor 1) • HO2 sensor (bank 1 sensor 2) • Exhaust manifold (TWC)
P0430	OSC value smaller than standard value under active air-fuel ratio control (2 trip detection logic)	• Gas leakage from exhaust system • A/F sensor (bank 2 sensor 1) • HO2 sensor (bank 2 sensor 2) • Exhaust manifold (TWC)

HINT:
- Bank 1 refers to the bank that includes cylinder No. 1.
- Bank 2 refers to the bank that does not include cylinder No. 1.
- Sensor 1 refers to the sensor closest to the engine assembly.
- Sensor 2 refers to the sensor farthest away from the engine assembly.

MONITOR STRATEGY

Related DTCs	P0420: Catalyst Deterioration P0430: Catalyst Deterioration
Required Sensors/Components (Main)	A/F sensor and heated oxygen sensor
Required Sensors/Components (Related)	Intake air temperature sensor, mass air flow meter, crankshaft position sensor and engine coolant temperature sensor
Frequency of Operation	Once per driving cycle
Duration	About 30 seconds
MIL Operation	2 driving cycles
Sequence of Operation	None

TYPICAL ENABLING CONDITIONS

Monitor runs whenever following DTCs not present	P0011 (VVT System 1 - Advance) P0012 (VVT System 1 - Retard) P0021 (VVT System 2 - Advance) P0022 (VVT System 2 - Retard) P0031, P0032, P0051, P0052 (A/F sensor heater - Sensor 1) P0037, P0038, P0057, P0058 (HO2 sensor Heater - Sensor 2) P0100 - P0103 (MAF meter) P0115 - P0118 (ECT sensor) P0120 - P0223, P2135 (TP sensor) P0125 (Insufficient ECT for closed loop) P0136, P0156 (HO2 Sensor - Sensor 2) P0171, P0172, P0174, P0175 (Fuel system) P0300 - P0306 (Misfire) P0335 (CKP sensor) P0340 (CMP sensor) P0351 - P0356 (Ignitor) P0500 (VSS) P2196, P2198 (A/F sensor - rationality) P2A00, P2A03 (A/F sensor - slow response)
Battery voltage	11 V or more
IAT	-10°C (14°F) or more
Engine coolant temperature sensor	75°C (167°F) or more
Atmospheric pressure coefficient	76 kPa (570 mmHg) or more
Idling	OFF
Engine RPM	Less than 3,200 rpm
A/F sensor status	Activated
Fuel system status	Closed loop
Engine load	10 to 70 %
All of the following conditions are met	Condition 1, 2 and 3
1. Mass air flow rate	5 to 70 g/sec
2. Front catalyst temperature (estimated)	650 to 840°C (1,202 to 1,544°F)
3. Rear catalyst temperature (estimated)	100 to 900°C (212 to 1,652°F)
Rear HO2 sensor monitor	Completed
Shift position	4th or higher

TYPICAL MALFUNCTION THRESHOLDS

Oxygen Storage Capacity (OSC) of Three-Way Catalytic Converter (TWC)	Less than 0.04 g

MONITOR RESULT

Refer to CHECKING MONITOR STATUS (See page ES-20).

CONFIRMATION DRIVING PATTERN

HINT:

Performing this confirmation pattern will activate the catalyst monitor. This is very useful for verifying the completion of a repair.

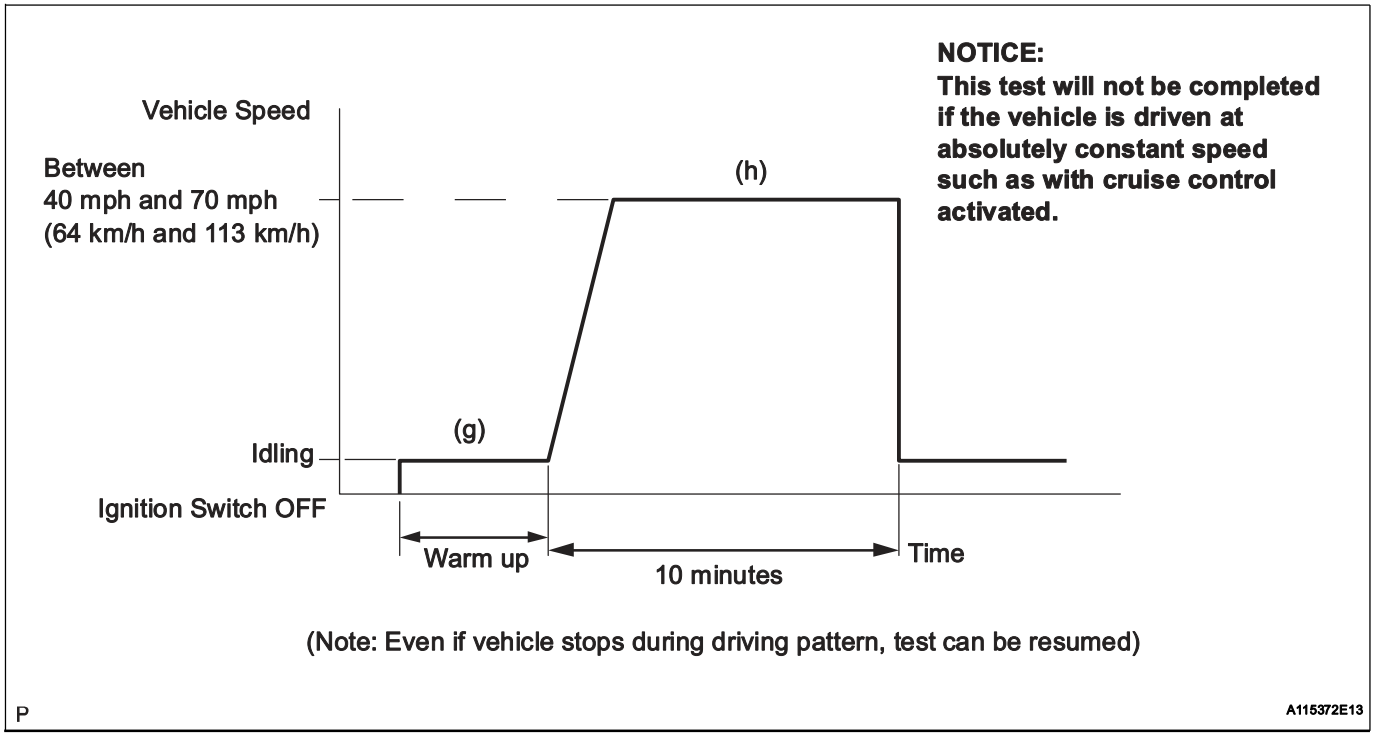

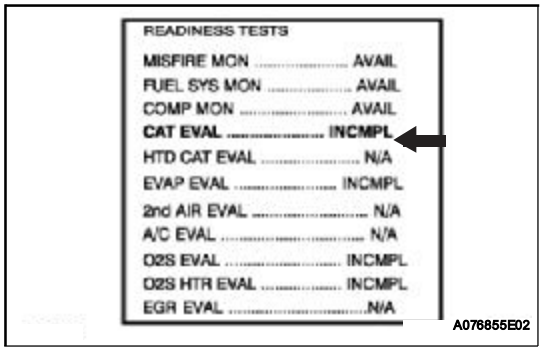

(a) Connect the intelligent tester to the DLC3.
(b) Turn the ignition switch ON.
(c) Turn the tester ON.
(d) Clear DTCs (where set) (See page ES-38).
(e) Select the following menu items: DIAGNOSIS / CARB OBD II / READINESS TESTS.
(f) Check that CAT EVAL is INCMPL (incomplete).
(g) Start the engine and warm it up.
(h) Drive the vehicle at between 40 mph and 70 mph (64 km/h and 113 km/h) for at least 10 minutes.
(i) Note the state of the Readiness Tests items. Those items will change to COMPL (complete) as CAT EVAL monitor operates.
(j) On the tester, select the following menu items: DIAGNOSIS / ENHANCED OBD II / DTC INFO / PENDING CODES and check if any DTCs (any pending DTCs) are set.
HINT:
If CAT EVAL does not change to COMPL, and any pending DTCs fail to set, extend the driving time.

CONDITIONING FOR SENSOR TESTING

HINT:
Perform the operation with the engine speeds and time durations described below prior to checking the waveforms of the A/F and HO2 sensors. This is in order to activate the sensors sufficiently to obtain the appropriate inspection results.

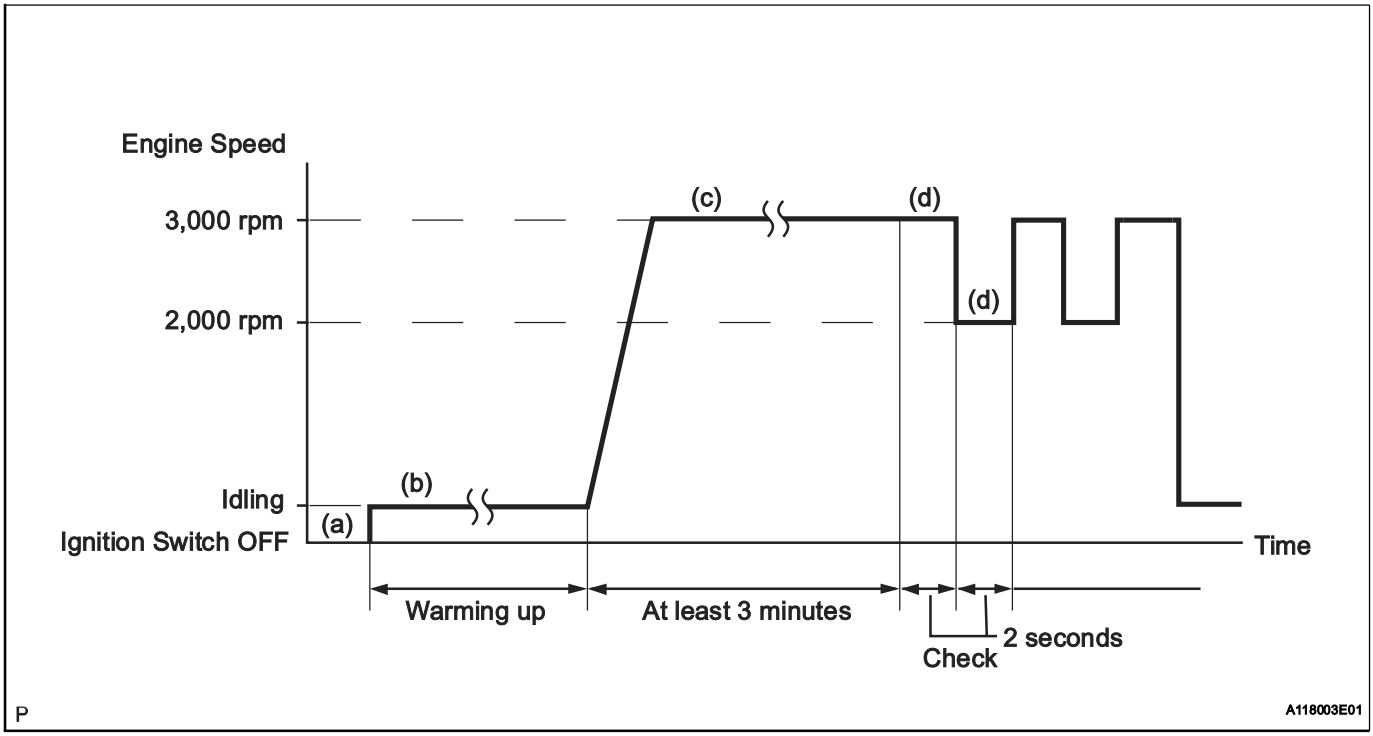

(a) Connect an intelligent tester to the DLC3.
(b) Start the engine and warm it up with all the accessories switched OFF, until the engine coolant temperature stabilizes.
(c) Run the engine at an engine speed of between 2,500 rpm and 3,000 rpm for at least 3 minutes.
(d) While running the engine at 3,000 rpm for 2 seconds and 2,000 rpm for 2 seconds, check the waveforms of the A/F and HO2 sensors using the tester.
HINT:

- If either of the voltage outputs of the Air-Fuel Ratio (A/F) or Heated Oxygen (HO2) sensor does not fluctuate, or either of the sensors makes a noise, the sensor may be malfunctioning.
- If the voltage outputs of both the sensors remain lean or rich, the air-fuel ratio may be extremely lean or rich. In such cases, perform the following A/F CONTROL using an intelligent tester.
- If the Three-Way Catalytic Converter (TWC) has deteriorated, the HO2 sensor (located behind the TWC) voltage output fluctuates up and down frequently, even under normal driving conditions (active air-fuel ratio control is not performed).

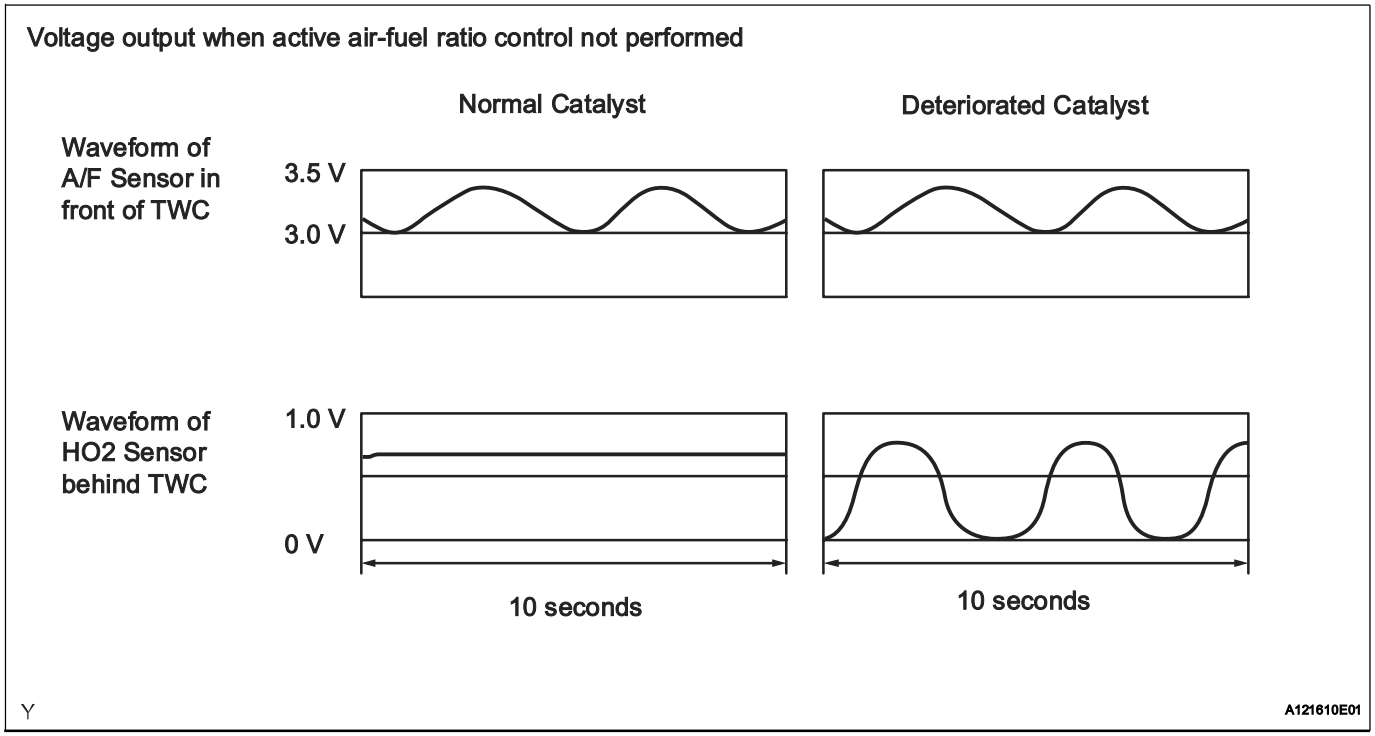

INSPECTION PROCEDURE

HINT:
Intelligent tester only:
Malfunctioning areas can be identified by performing the A/F CONTROL function provided in the ACTIVE TEST. The A/F CONTROL function can help to determine whether the Air-Fuel Ratio (A/F) sensor, Heated Oxygen (HO2) sensor and other potential trouble areas are malfunctioning.
The following instructions describe how to conduct the A/F CONTROL operation using an intelligent tester.
(1) Connect an intelligent tester to the DLC3.
(2) Start the engine and turn the tester ON.
(3) Warm up the engine at an engine speed of 2,500 rpm for approximately 90 seconds.
(4) Select the following menu items: DIAGNOSIS / ENHANCED OBD II / ACTIVE TEST / A/F CONTROL.
(5) Perform the A/F CONTROL operation with the engine in an idling condition (press the RIGHT or LEFT button to change the fuel injection volume).
(6) Monitor the voltage outputs of the A/F and HO2 sensors (AFS B1S1 and O2S B1S2 or AFS B2S1 and O2S B2S2) displayed on the tester.
HINT:
- The A/F CONTROL operation lowers the fuel injection volume by 12.5 % or increases the injection volume by 25 %.
- Each sensor reacts in accordance with increases and decreases in the fuel injection volume.

Standard

Tester Display (Sensor)	Injection Volumes	Status	Voltages
AFS B1S1 or AFS B2S1 (A/F)	+25 %	Rich	Less than 3.0
AFS B1S1 or AFS B2S1 (A/F)	-12.5 %	Lean	More than 3.35
O2S B1S2 or O2S B2S2 (HO2)	+25 %	Rich	More than 0.55
O2S B1S2 or O2S B2S2 (HO2)	-12.5 %	Lean	Less than 0.4

NOTICE:
The Air-Fuel Ratio (A/F) sensor has an output delay of a few seconds and the Heated Oxygen (HO2) sensor has a maximum output delay of approximately 20 seconds.

Case	A/F Sensor (Sensor 1) Output Voltage		HO2 Sensor (Sensor 2) Output Voltage		Main Suspected Trouble Areas
1	Injection volume +25 % -12.5 %		Injection volume +25 % -12.5 %		-
	Output voltage More than 3.35 V Less than 3.0 V	OK	Output voltage More than 0.55 V Less than 0.4 V	OK	
2	Injection volume +25 % -12.5 %		Injection volume +25 % -12.5 %		• A/F sensor • A/F sensor heater • A/F sensor circuit
	Output voltage Almost no reaction	NG	Output voltage More than 0.55 V Less than 0.4 V	OK	
3	Injection volume +25 % -12.5 %		Injection volume +25 % -12.5 %		• HO2 sensor • HO2 sensor heater • HO2 sensor circuit
	Output voltage More than 3.35 V Less than 3.0 V	OK	Output voltage Almost no reaction	NG	
4	Injection volume +25 % -12.5 %		Injection volume +25 % -12.5 %		• Injector • Fuel pressure • Gas leakage from exhaust system (Air-fuel ratio extremely lean or rich)
	Output voltage Almost no reaction	NG	Output voltage Almost no reaction	NG	

- Following the A/F CONTROL procedure enables technicians to check and graph the voltage outputs of both the A/F and HO2 sensors.
- To display the graph, select the following menu items on the tester: DIAGNOSIS / ENHANCED OBD II / ACTIVE TEST / A/F CONTROL / USER DATA / AFS B1S1 and O2S B1S2 or AFS B2S1 and O2S B2S2, and press the YES button and then the ENTER button followed by the F4 button.

HINT:
Read freeze frame data using an intelligent tester. Freeze frame data record the engine condition when malfunctions are detected. When troubleshooting, freeze frame data can help determine if the vehicle was moving or stationary, if the engine was warmed up or not, if the air-fuel ratio was lean or rich, and other data, from the time the malfunction occurred.

1	CHECK ANY OTHER DTCS OUTPUT (IN ADDITION TO DTC P0420 AND/OR P0430)

(a) Connect an intelligent tester to the DLC3.
(b) Turn the ignition switch ON and turn the tester ON.
(c) Select the following menu items: DIAGNOSIS / ENHANCED OBD II / DTC INFO / CURRENT CODES.
(d) Read DTCs.

Result

Display (DTC Output)	Proceed To
P0420 and/or P0430	A
P0420 and/or P0430 and other DTCs	B

HINT:
If any DTCs other than P0420 or P0430 are output, troubleshoot those DTCs first.

B → GO TO DTC CHART (See page ES-57)

A

2 PERFORM ACTIVE TEST USING INTELLIGENT TESTER (A/F CONTROL)

(a) Connect an intelligent tester to the DLC3.
(b) Start the engine and turn the tester ON.
(c) Warm up the engine at an engine speed of 2,500 rpm for approximately 90 seconds.
(d) Select the following menu items: DIAGNOSIS / ENHANCED OBD II / ACTIVE TEST / A/F CONTROL.
(e) Perform the A/F CONTROL operation with the engine in an idling condition (press the RIGHT or LEFT button to change the fuel injection volume).
(f) Monitor the voltage outputs of the A/F and HO2 sensors (AFS B1S1 and O2S B1S2 or AFS B2S1 and O2S B2S2) displayed on the tester.
HINT:
- The A/F CONTROL operation lowers the fuel injection volume by 12.5 % or increases the injection volume by 25 %.
- Each sensor reacts in accordance with increases and decreases in the fuel injection volume.

ES

Standard

Tester Display (Sensor)	Injection Volumes	Status	Voltages
AFS B1S1 or AFS B2S1 (A/F)	+25 %	Rich	Less than 3.0
AFS B1S1 or AFS B2S1 (A/F)	-12.5 %	Lean	More than 3.35
O2S B1S2 or O2S B2S2 (HO2)	+25 %	Rich	More than 0.55
O2S B1S2 or O2S B2S2 (HO2)	-12.5 %	Lean	Less than 0.4

Result

Status AFS B1S1 or AFS B2S1	Status O2S B1S2 or O2S B2S2	A/F Condition and A/F and HO2 Sensors Conditions	Misfires	Main Suspected Trouble Areas	Proceed To
Lean/Rich	Lean/Rich	Normal	-	• Three-Way Catalytic Converter (TWC) • Gas leakage from exhaust system	A
Lean	Lean/Rich	A/F sensor malfunction	-	• A/F sensor	B
Rich	Lean/Rich	A/F sensor malfunction	-	• A/F sensor	
Lean/Rich	Lean	HO2 sensor malfunction	-	• HO2 sensor • Gas leakage from exhaust system	C
Lean/Rich	Rich	HO2 sensor malfunction	-	• HO2 sensor • Gas leakage from exhaust system	

Status AFS B1S1 or AFS B2S1	Status O2S B1S2 or O2S B2S2	A/F Condition and A/F and HO2 Sensors Conditions	Misfires	Main Suspected Trouble Areas	Proceed To
Lean	Lean	Actual air-fuel ratio lean	May occur	• Extremely rich or lean actual air-fuel ratio • Gas leakage from exhaust system	A
Rich	Rich	Actual air-fuel ratio rich	-	• Extremely rich or lean actual air-fuel ratio • Gas leakage from exhaust system	

ES

Lean: During A/F CONTROL, the A/F sensor output voltage (AFS) is consistently more than 3.35 V, and the HO2 sensor output voltage (O2S) is consistently less than 0.4 V.
Rich: During A/F CONTROL, the AFS is consistently less than 3.0 V, and the O2S is consistently more than 0.55 V.
Lean/Rich: During A/F CONTROL of the ACTIVE TEST, the output voltage of the HO2 sensor alternates correctly.

B → **CHECK AND REPLACE AIR FUEL RATIO SENSOR**

C → **CHECK AND REPLACE HEATED OXYGEN SENSOR, AND CHECK AND REPAIR EXHAUST GAS LEAKAGE**

A

3 CHECK FOR EXHAUST GAS LEAKAGE

OK:
No gas leakage.

NG → **REPAIR OR REPLACE EXHAUST GAS LEAKAGE POINT**

OK

REPLACE THREE-WAY CATALYTIC CONVERTER

DTC	P043E	Evaporative Emission System Reference Orifice Clog Up

DTC	P043F	Evaporative Emission System Reference Orifice High Flow

DTC SUMMARY

DTCs	Monitoring Items	Malfunction Detection Conditions	Trouble Areas	Detection Timings	Detection Logic
P043E	Reference orifice clogged	P043E, P043F, P2401, P2402 and P2419 present when one of following conditions met during key-off EVAP monitor: • EVAP pressure just after reference pressure measurement greater than -1 kPa-g (-7.5 mmHg-g) • Reference pressure less than -4.85 kPa-g (-36.4 mmHg-g) • Reference pressure greater than -1.057 kPa-g (-7.93 mmHg-g) • Reference pressure not saturated • Reference pressure difference between first and second 0.7 kPa-g (5.25 mmHg-g) or more HINT: Typical example values	• Canister pump module (Reference orifice, leak detection pump, vent valve) • Connector/wire harness (Canister pump module - ECM) • EVAP system hose (pipe from air inlet port to canister pump module, canister filter, fuel tank vent hose) • ECM	While ignition switch OFF	2 trip
P043F	Reference orifice high-flow		• Canister pump module (Reference orifice, leak detection pump, vent valve) • Connector/wire harness (Canister pump module - ECM) • EVAP system hose (pipe from air inlet port to canister pump module, canister filter, fuel tank vent hose) • ECM	While ignition switch OFF	2 trip

HINT:
The reference orifice is located inside the canister pump module.

DESCRIPTION

The description can be found in the EVAP (Evaporative Emission) System (See page ES-352).

INSPECTION PROCEDURE

Refer to the EVAP System (See page ES-357).

MONITOR DESCRIPTION

5 hours* after the ignition switch is turned to OFF, the leak detection pump creates negative pressure (vacuum) in the EVAP system. The ECM monitors for leaks and actuator malfunctions based on the EVAP pressure.
HINT:
*: If the engine coolant temperature is not below 35°C (95°F) 5 hours after the ignition switch is turned to OFF, the monitor check starts 2 hours later. If it is still not below 35°C (95°F) 7 hours after the ignition switch is turned to OFF, the monitor check starts 2.5 hours later.

Sequence	Operations	Descriptions	Duration
-	ECM activation	Activated by soak timer, 5 hours (7 or 9.5 hours) after ignition switch turned to OFF.	-

Sequence	Operations	Descriptions	Duration
A	Atmospheric pressure measurement	Vent valve turned OFF (vent) and EVAP system pressure measured by ECM in order to register atmospheric pressure. If pressure in EVAP system not between 70 kPa-a and 110 kPa-a (525 mmHg-a and 825 mmHg-a), ECM cancels EVAP system monitor.	10 seconds
B	First reference pressure measurement	In order to determine reference pressure, leak detection pump creates negative pressure (vacuum) through reference orifice and then ECM checks if leak detection pump and vent valve operate normally.	60 seconds
C	EVAP system pressure measurement	Vent valve turned ON (closed) to shut EVAP system. Negative pressure (vacuum) created in EVAP system, and EVAP system pressure then measured. Write down measured value as will be used in leak check. If EVAP pressure does not stabilize within 15 minutes, ECM cancels EVAP system monitor.	15 minutes*
D	Purge VSV monitor	Purge VSV opened and then EVAP system pressure measured by ECM. Large increase indicates normality.	10 seconds
E	Second reference pressure measurement	After second reference pressure measurement, leak check performed by comparing first and second reference pressure. If stabilized system pressure higher than second reference pressure, ECM determines that EVAP system leaking.	60 seconds
F	Final check	Atmospheric pressure measured and then monitoring result recorded by ECM.	-

* If only a small amount of fuel is in the fuel tank, it takes longer for the EVAP pressure to stabilize.

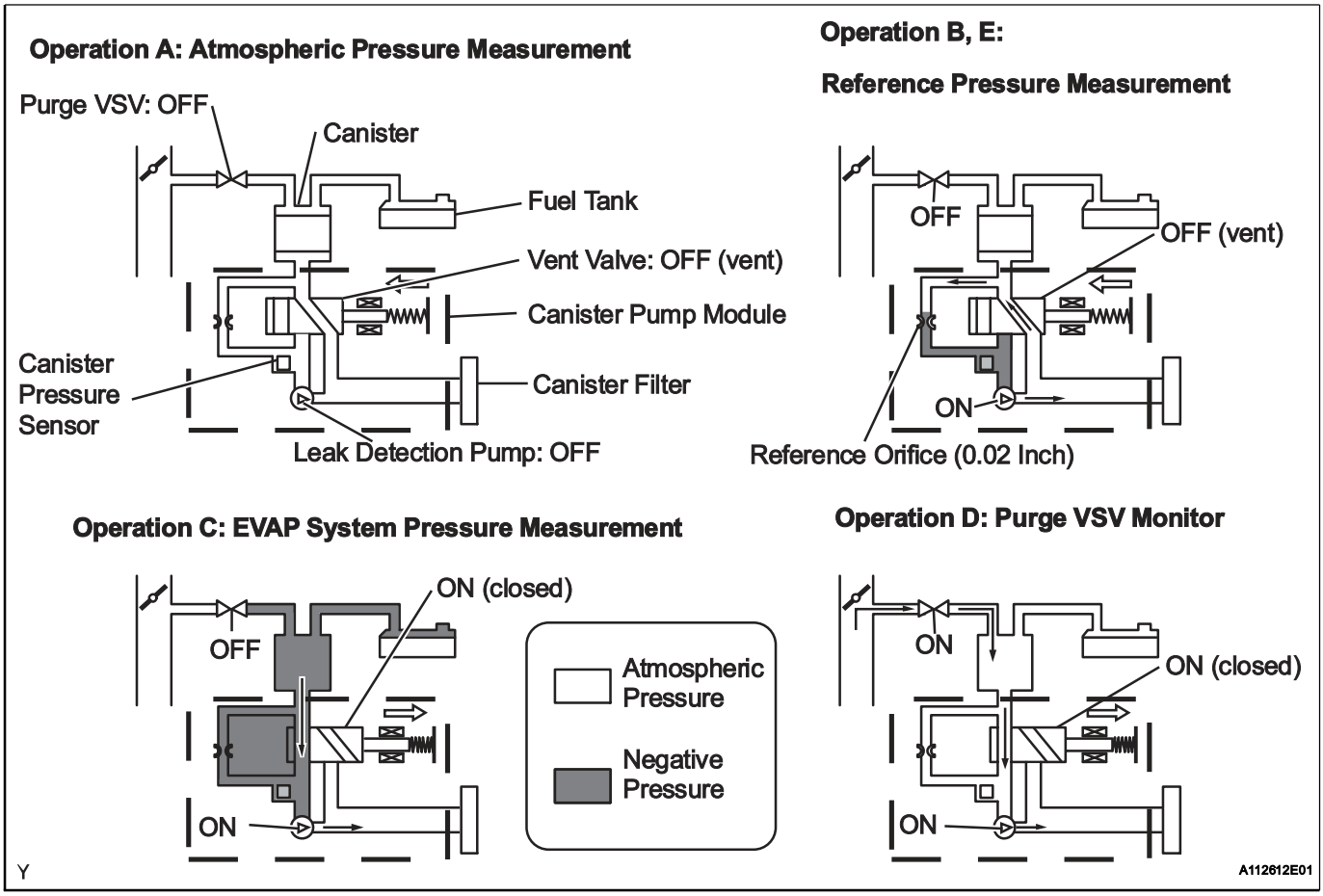

(a) P043E: Reference orifice clogged

In operation B, the leak detection pump creates negative pressure (vacuum) through the reference orifice. The EVAP system pressure is then measured by the ECM, using the canister pressure sensor, to determine the reference pressure. If the pressure is lower than -4.85 kPa-g (-36.4 mmHg-g), the ECM interprets this as a clog malfunction in the reference orifice, and stops the EVAP system monitor. The ECM then illuminates the MIL and sets the DTC (2 trip detection logic).

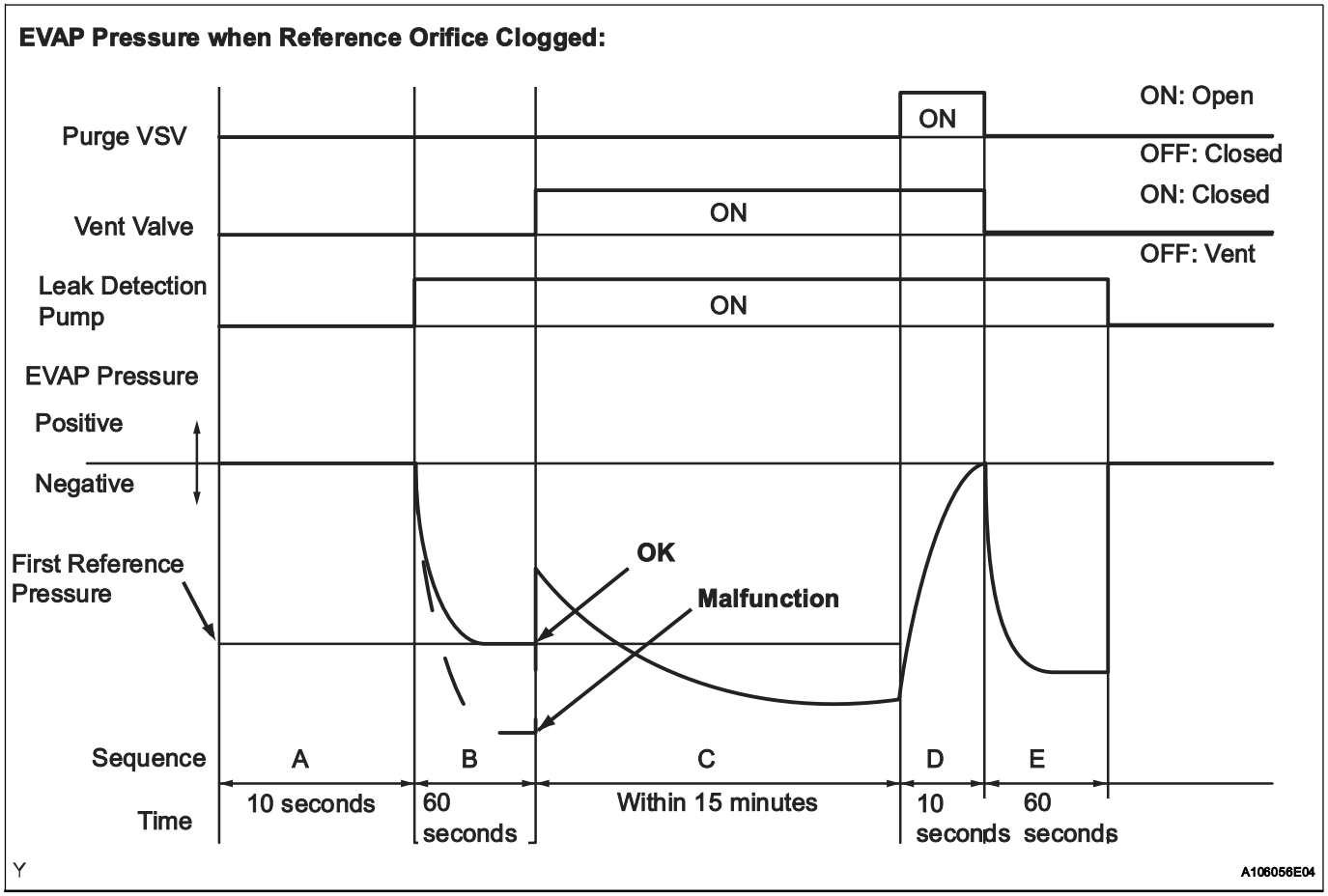

(b) P043F: Reference orifice high-flow

In operation B, the leak detection pump creates negative pressure (vacuum) through the reference orifice. The EVAP system pressure is then measured by the ECM using the canister pressure sensor to determine the reference pressure. If the pressure is higher than -1.057 kPa-g (-7.93 mmHg-g), the ECM interprets this as a high-flow malfunction in the reference orifice, and stops the EVAP system monitor. The ECM then illuminates the MIL and sets the DTC (2 trip detection logic).

EVAP Pressure when Reference Orifice High-flow Malfunction:

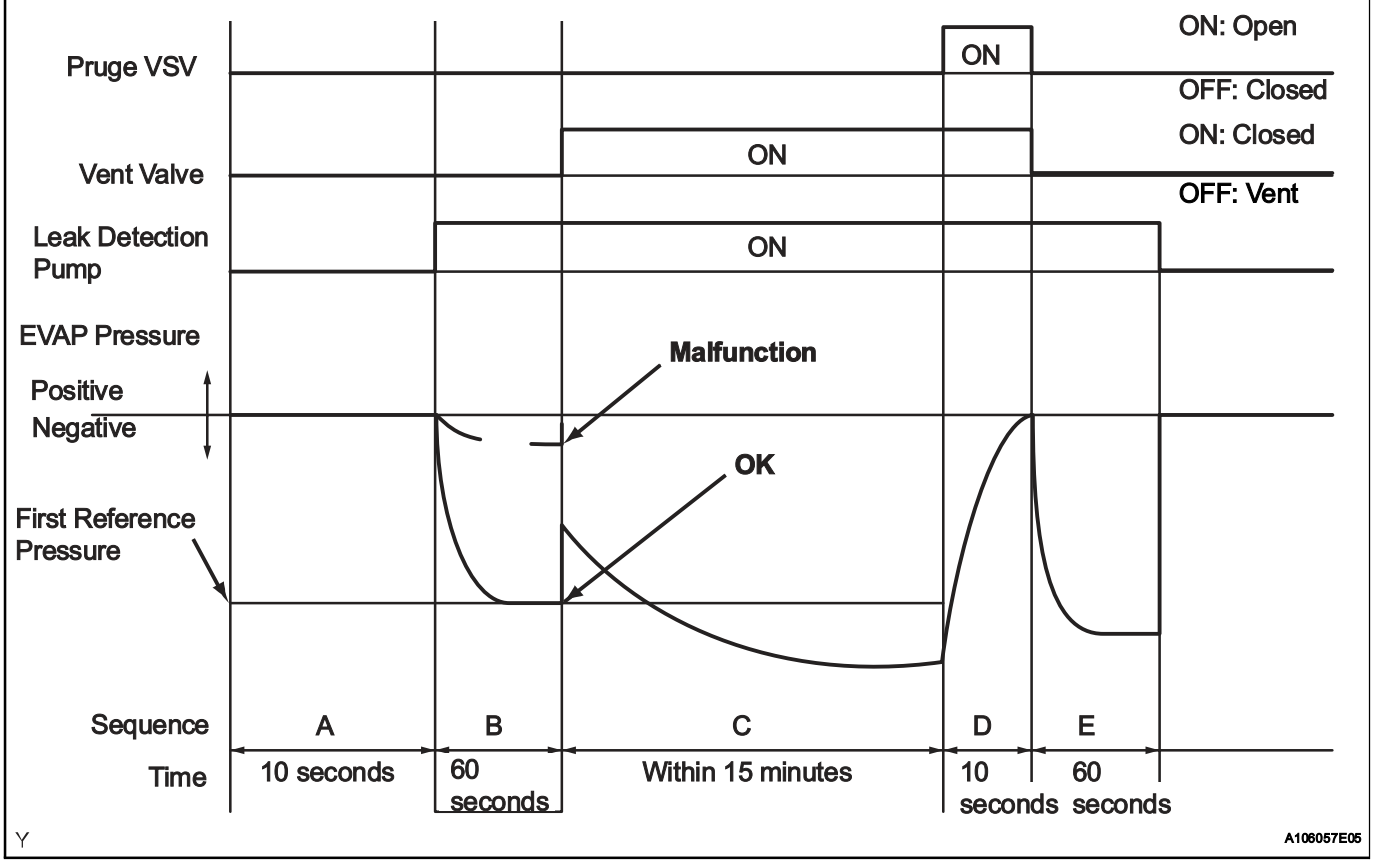

MONITOR STRATEGY

Required Sensors/Components	Canister pump module
Frequency of Operation	Once per driving cycle
Duration	Within 2 minutes
MIL Operation	2 driving cycles
Sequence of Operation	None

TYPICAL ENABLING CONDITIONS

Monitor runs whenever following DTCs not present	None
EVAP key-off monitor runs when all of following conditions met	-
Atmospheric pressure	70 to 110 kPa-a (525 to 825 mmHg-a)
Battery voltage	10.5 V or more
Vehicle speed	Below 2.5 mph (4 km/h)
Ignition switch	OFF
Time after key off	5 or 7 or 9.5 hours
Canister pressure sensor malfunction (P0450, P0451, P0452 and P0453)	Not detected
Purge VSV	Not operated by scan tool
Vent valve	Not operated by scan tool
Leak detection pump	Not operated by scan tool
Both of following conditions met before key off	Conditions 1 and 2
1. Duration that vehicle driven	5 minutes or more
2. EVAP purge operation	Performed

ECT	4.4° to 35°C (40° to 95°F)
IAT	4.4°to 35°C (40° to 95°F)

1. Key-off monitor sequence 1 to 8

1. Atmospheric pressure measurement

Next sequence run if following condition set	-
Atmospheric pressure change	Less than 0.3 kPa-g (2.25 mmHg-g) in 1 second

2. First reference pressure measurement

Next sequence run if all of following conditions set	Condition 1, 2 and 3
1. EVAP pressure just after reference pressure measurement start	-1 kPa-g (-7.5 mmHg-g) or less
2. Reference pressure	-4.85 to -1.057 kPa-g (-36.4 to -7.93 mmHg-g)
3. Reference pressure	Saturated within 60 seconds

3. Vent valve stuck closed check

Next sequence run if following condition set	-
EVAP pressure change after vent valve ON (closed)	0.3 kPa-g (2.25 mmHg-g) or more

4. Vacuum introduction

Next sequence run if following condition set	-
EVAP pressure	Saturated within 15 minutes

5. Purge VSV stuck closed check

Next sequence run if following condition set	-
EVAP pressure change after purge VSV ON (open)	0.3 kPa-g (2.25 mmHg-g) or more

6. Second reference pressure measurement

Next sequence run if all of following conditions set	Condition 1, 2, 3 and 4
1. EVAP pressure just after reference pressure	-1 kPa-g (-7.5 mmHg-g) or less
2. Reference pressure	-4.85 to -1.057 kPa-g (-36.4 to -7.93 mmHg-g)
3. Reference pressure	Saturated within 60 seconds
4. Reference pressure difference between first and second	Less than 0.7 kPa-g (5.25 mmHg-g)

7. Leak check

Next sequence run if following condition set	-
EVAP pressure when vacuum introduction complete	Second reference pressure or less

8. Atmospheric pressure measurement

EVAP monitor complete if following condition set	-
Atmospheric pressure difference between sequence 1 and 8	Within 0.3 kPa-g (2.25 mmHg-g)

TYPICAL MALFUNCTION THRESHOLDS

"Saturated" indicates that the EVAP pressure change is less than 0.286 kPa-g (2.14 mmHg-g) in 60 seconds.

One of following conditions met	-
EVAP pressure just after reference pressure measurement start	More than -1 kPa-g (-7.5 mmHg-g)
Reference pressure	Less than -4.85 kPa-g (-36.4 mmHg-g)
Reference pressure	-1.057 kPa-g (-7.93 mmHg-g) or more
Reference pressure	Not saturated within 60 seconds
Reference pressure difference between first and second	0.7 kPa-g (5.25 mmHg-g) or more

MONITOR RESULT

Refer to CHECKING MONITOR STATUS (See page ES-20).

DTC	P0441	Evaporative Emission Control System Incorrect Purge Flow

DTC SUMMARY

DTC	Monitoring Items	Malfunction Detection Conditions	Trouble Areas	Detection Timings	Detection Logic
P0441	Purge VSV (Vacuum Switching Valve) stuck open	Leak detection pump creates negative pressure (vacuum) in EVAP system and EVAP system pressure measured. Reference pressure measured at start and at end of leak check. If stabilized pressure higher than [second reference pressure x 0.2], ECM determines that purge VSV stuck open	• Purge VSV • Connector/wire harness (Purge VSV - ECM) • ECM • Canister pump module • Leakage from EVAP system	While ignition switch OFF	2 trip
	Purge VSV stuck closed	After EVAP leak check performed, purge VSV turned ON (open), and atmospheric air introduced into EVAP system. Reference pressure measured at start and at end of check. If pressure does not return to near atmospheric pressure, ECM determines that purge VSV stuck closed	• Purge VSV • Connector/wire harness (Purge VSV - ECM) • ECM • Canister pump module • Leakage from EVAP system	While ignition switch OFF	2 trip
	Purge flow	While engine running, following conditions successively met: • Negative pressure not created in EVAP system when purge VSV turned ON (open) • EVAP system pressure change less than 0.5 kPa-g (3.75 mmHg-g) when vent valve turned ON (closed) • Atmospheric pressure change before and after purge flow monitor less than 0.1 kPa-g (0.75 mmHg-g)	• Purge VSV • Connector/wire harness (Purge VSV - ECM) • Leakage from EVAP line (Purge VSV - Intake manifold) • ECM	While engine running	2 trip

DESCRIPTION

The description can be found in the EVAP (Evaporative Emission) System (See page ES-352).

INSPECTION PROCEDURE

Refer to the EVAP System (See page ES-357).

MONITOR DESCRIPTION

The two monitors, Key-Off and Purge Flow, are used to detect malfunctions relating to DTC P0441. The Key-Off monitor is initiated by the ECM internal timer, known as the soak timer, 5 hours* after the ignition switch is turned to OFF. The purge flow monitor runs while the engine is running.

1. KEY-OFF MONITOR

   5 hours* after the ignition switch is turned to OFF, the leak detection pump creates negative pressure (vacuum) in the EVAP system. The ECM monitors for leaks and actuator malfunctions based on the EVAP pressure.

   HINT:

   *: If the engine coolant temperature is not below 35°C (95°F) 5 hours after the ignition switch is turned to OFF, the monitor check starts 2 hours later. If it is still not below 35°C (95°F) 7 hours after the ignition switch is turned to OFF, the monitor check starts 2.5 hours later.

Sequence	Operations	Descriptions	Duration
-	ECM activation	Activated by soak timer, 5 hours (7 or 9.5 hours) after ignition switch turned to OFF.	-

Sequence	Operations	Descriptions	Duration
A	Atmospheric pressure measurement	Vent valve turned OFF (vent) and EVAP system pressure measured by ECM in order to register atmospheric pressure. If pressure in EVAP system not between 70 kPa-a and 110 kPa-a (525 mmHg-a and 825 mmHg-a), ECM cancels EVAP system monitor.	10 seconds
B	First reference pressure measurement	In order to determine reference pressure, leak detection pump creates negative pressure (vacuum) through reference orifice and then ECM checks if leak detection pump and vent valve operate normally.	60 seconds
C	EVAP system pressure measurement	Vent valve turned ON (closed) to shut EVAP system. Negative pressure (vacuum) created in EVAP system, and EVAP system pressure then measured. Write down measured value as will be used in leak check. If EVAP pressure does not stabilize within 15 minutes, ECM cancels EVAP system monitor.	15 minutes*
D	Purge VSV monitor	Purge VSV opened and then EVAP system pressure measured by ECM. Large increase indicates normality.	10 seconds
E	Second reference pressure measurement	After second reference pressure measurement, leak check performed by comparing first and second reference pressure. If stabilized system pressure higher than second reference pressure, ECM determines that EVAP system leaking.	60 seconds
F	Final check	Atmospheric pressure measured and then monitoring result recorded by ECM.	-

* If only a small amount of fuel is in the fuel tank, it takes longer for the EVAP pressure to stabilize.

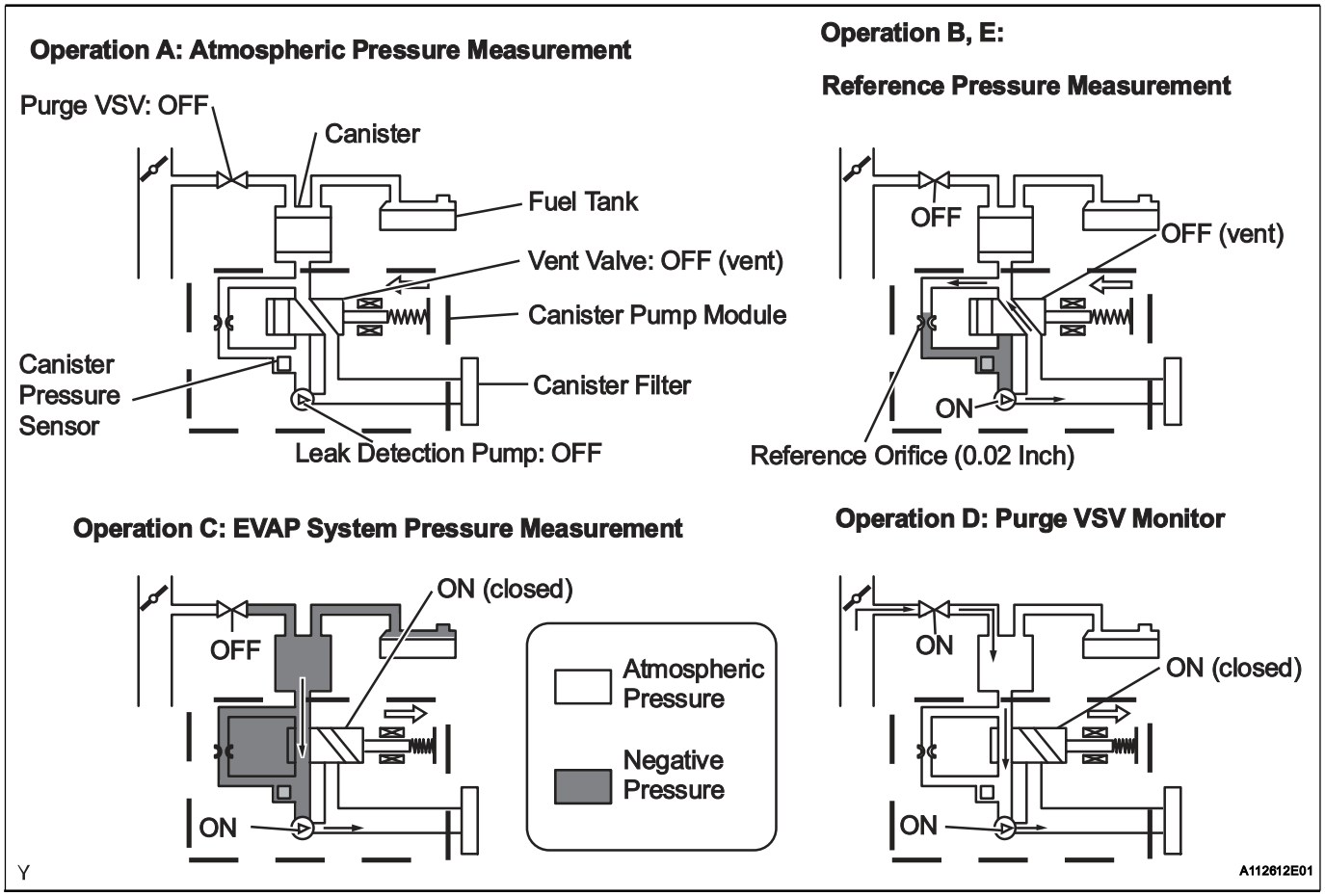

(a) Purge VSV stuck open

In operation C, the leak detection pump creates negative pressure (vacuum) in the EVAP system. The EVAP system pressure is then measured by the ECM using the canister pressure sensor. If the stabilized system pressure is higher than [second reference pressure x 0.2], the ECM interprets this as the purge VSV (Vacuum Switching Valve) being stuck open. The ECM illuminates the MIL and sets the DTC (2 trip detection logic).

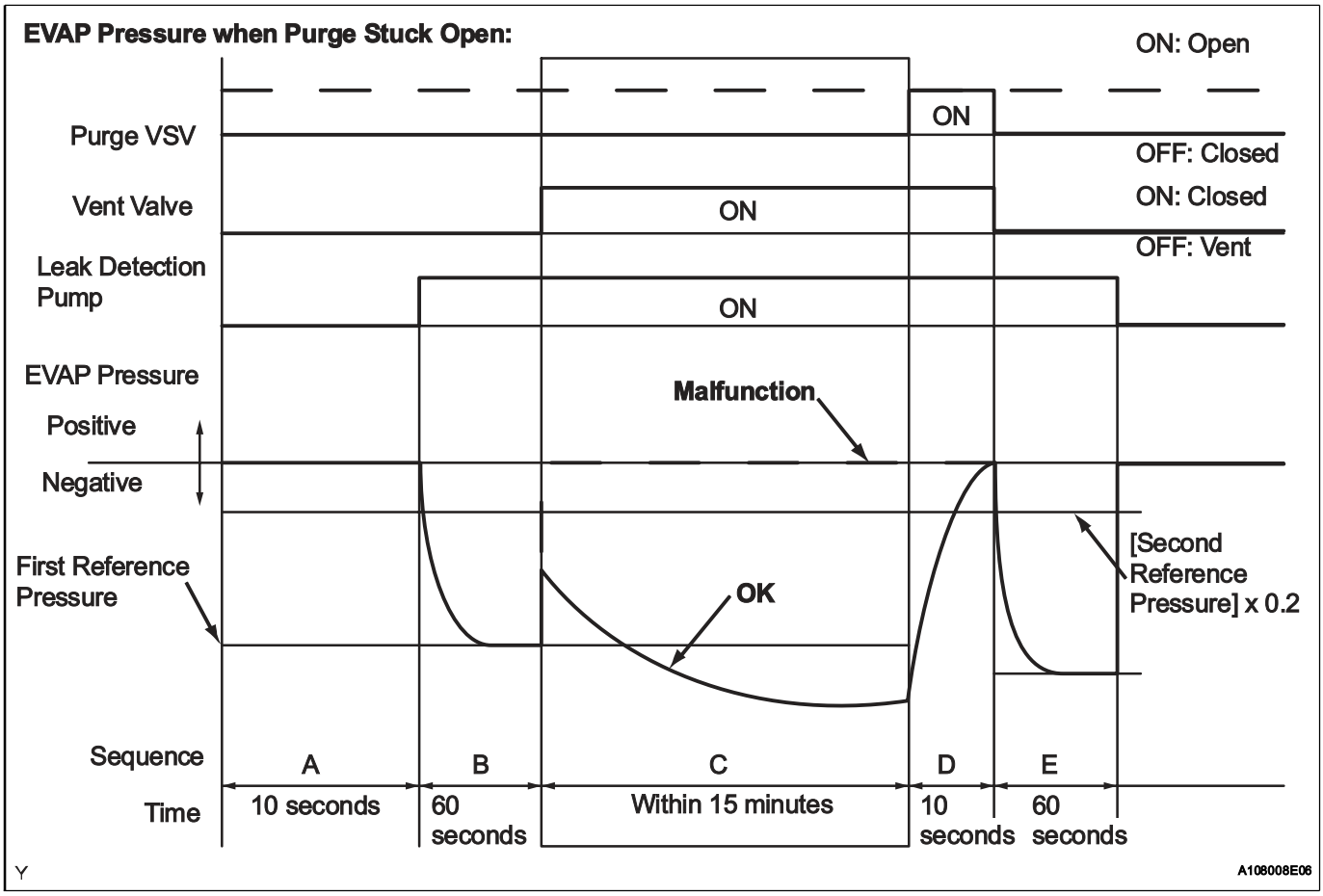

(b) Purge VSV stuck closed

In operation D, the canister pressure sensor measures the EVAP system pressure. The pressure measurement for purge VSV monitor is begun when the purge VSV is turned ON (open) after the EVAP leak check. When the measured pressure indicates an increase of 0.3 kPa-g (2.25 mmHg-g) or more, the purge VSV is functioning normally. If the pressure does not increase, the ECM interprets this as the purge VSV being stuck closed. The ECM illuminates the MIL and sets the DTC (2 trip detection logic).

EVAP Pressure when Purge VSV Stuck Closed:

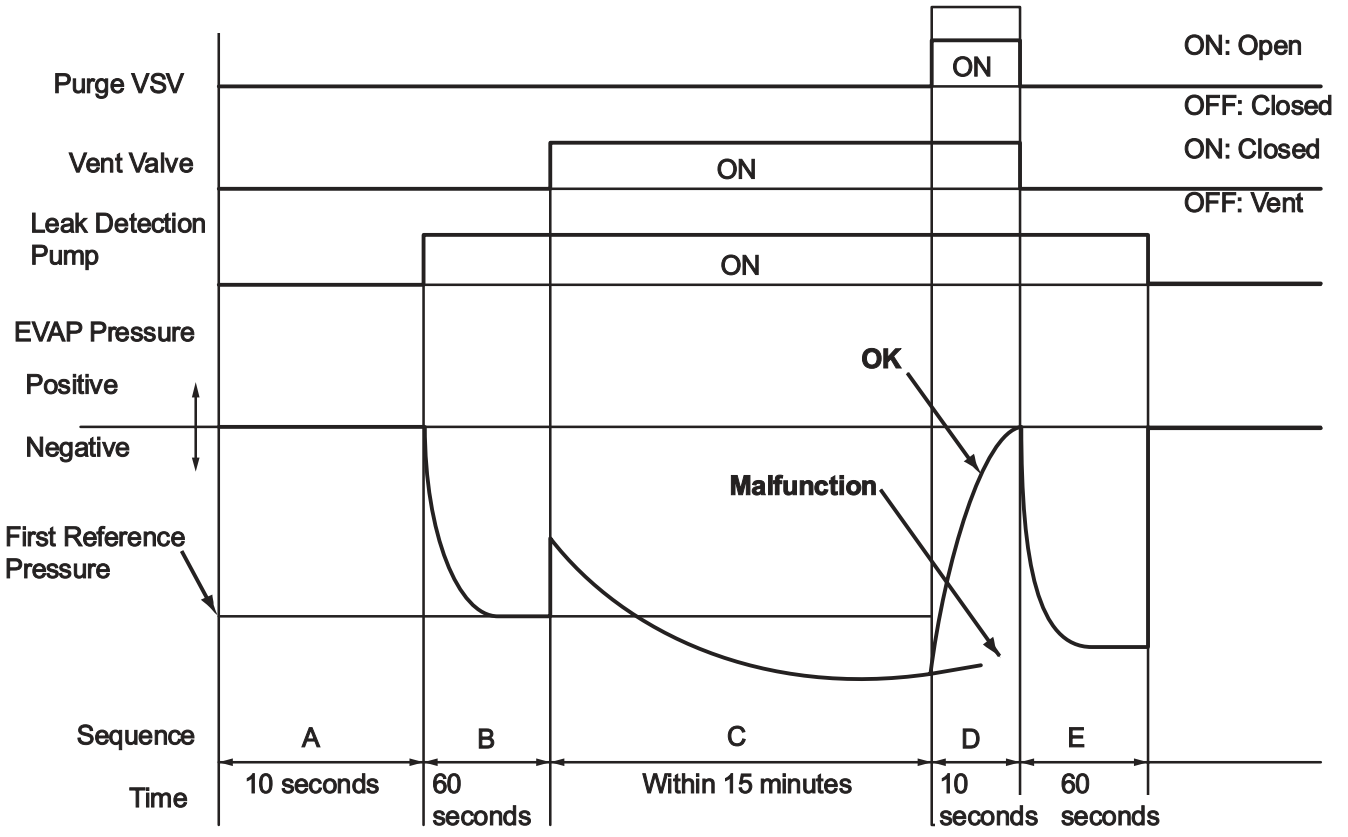

2. PURGE FLOW MONITOR

EVAP Pressure During Purge Flow Monitor:

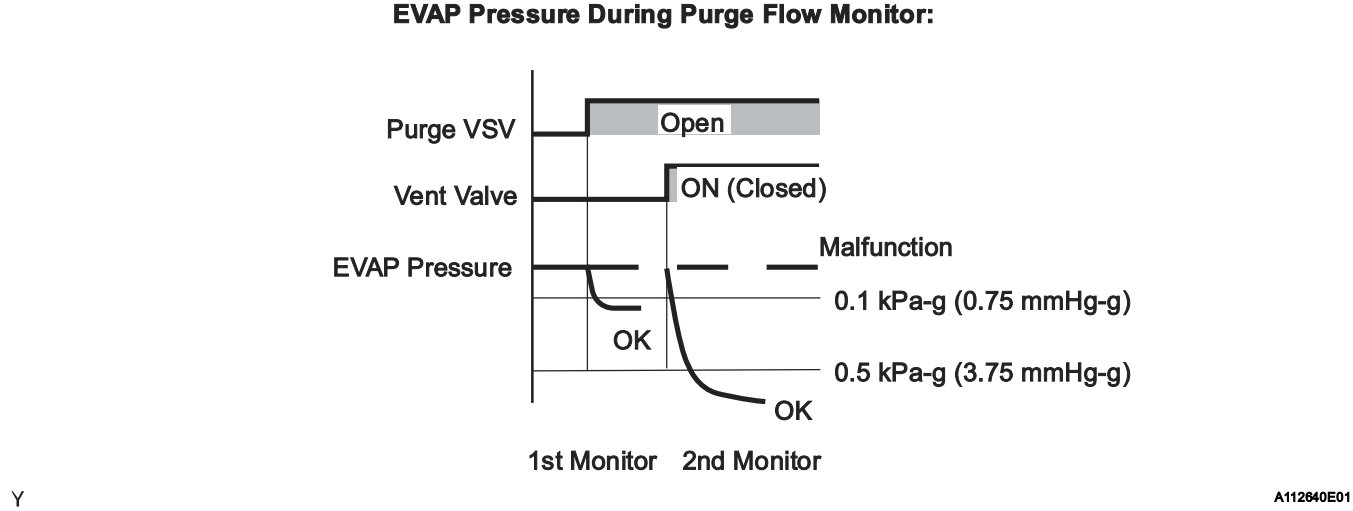

The purge flow monitor consists of the two step monitors. The 1st monitor is conducted every time and the 2nd monitor is activated if necessary.

- The 1st monitor
  While the engine is running and the purge VSV is ON (open), the ECM monitors the purge flow by measuring the EVAP pressure change. If negative pressure is not created, the ECM begins the 2nd monitor.
- The 2nd monitor
  The vent valve is turned ON (closed) and the EVAP pressure is then measured. If the variation in the pressure is less than 0.5 kPa-g (3.75 mmHg-g), the ECM interprets this as the purge VSV being stuck closed, and illuminates the MIL and sets DTC P0441 (2 trip detection logic).

Atmospheric pressure check:
In order to ensure reliable malfunction detection, the variation between the atmospheric pressures, before and after conduction of the purge flow monitor, is measured by the ECM.

ES

OBD II MONITOR SPECIFICATIONS

1. Key-off Monitor

Monitor Strategy

Required Sensors/Components	Purge VSV and canister pump module
Frequency of Operation	Once per driving cycle
Duration	Within 15 minutes (varies with fuel in tank)
MIL Operation	2 driving cycles
Sequence of Operation	None

Typical Enabling Conditions

EVAP key-off monitor runs when all of following conditions met	-
Atmospheric pressure	70 to 110 kPa-a (525 to 825 mmHg-a)
Battery voltage	10.5 V or more
Vehicle speed	Below 2.5 mph (4 km/h)
Ignition switch	OFF
Time after key off	5 or 7 or 9.5 hours
Canister pressure sensor malfunction (P0450, P0451, P0452 and P0453)	Not detected
Purge VSV	Not operated by scan tool
Vent valve	Not operated by scan tool
Leak detection pump	Not operated by scan tool
Both of following conditions met before key off	Conditions 1 and 2
1. Duration that vehicle driven	5 minutes or more
2. EVAP purge operation	Performed
ECT	4.4° to 35°C (40° to 95°F)
IAT	4.4°to 35°C (40° to 95°F)

2. Key-off monitor sequence 1 to 8

1. Atmospheric pressure measurement

Next sequence run if following condition set	-
Atmospheric pressure change	Less than 0.3 kPa-g (2.25 mmHg-g) in 1 second

2. First reference pressure measurement

Next sequence run if all of following conditions set	Condition 1, 2 and 3
1. EVAP pressure just after reference pressure measurement start	-1 kPa-g (-7.5 mmHg-g) or less
2. Reference pressure	-4.85 to -1.057 kPa-g (-36.4 to -7.93 mmHg-g)
3. Reference pressure	Saturated within 60 seconds

3. Vent valve stuck closed check

Next sequence run if following condition set	-
EVAP pressure change after vent valve ON (closed)	0.3 kPa-g (2.25 mmHg-g) or more

4. Vacuum introduction

Next sequence run if following condition set	-
EVAP pressure	Saturated within 15 minutes

5. Purge VSV stuck closed check

Next sequence run if following condition set	-
EVAP pressure change after purge VSV ON (open)	0.3 kPa-g (2.25 mmHg-g) or more

6. Second reference pressure measurement

Next sequence run if all of following conditions set	Condition 1, 2, 3 and 4
1. EVAP pressure just after reference pressure	-1 kPa-g (-7.5 mmHg-g) or less
2. Reference pressure	-4.85 to -1.057 kPa-g (-36.4 to -7.93 mmHg-g)
3. Reference pressure	Saturated within 60 seconds
4. Reference pressure difference between first and second	Less than 0.7 kPa-g (5.25 mmHg-g)

7. Leak check

Next sequence run if following condition set	-
EVAP pressure when vacuum introduction complete	Second reference pressure or less

8. Atmospheric pressure measurement

EVAP monitor complete if following condition set	-
Atmospheric pressure difference between sequence 1 and 8	Within 0.3 kPa-g (2.25 mmHg-g)

Typical Malfunction Thresholds

Purge VSV stuck open:	-
EVAP pressure when vacuum introduction complete	Higher than reference pressure x 0.2

Purge VSV stuck closed:	-
EVAP pressure change after purge VSV ON (open)	Less than 0.3 kPa-g (2.25 mmHg-g)

OBD II MONITOR SPECIFICATIONS

1. Purge Flow Monitor

Monitor Strategy

Required Sensors/Components	Purge VSV and canister pump module
Frequency of Operation	Once per driving cycle
Duration	Within 10 minutes
MIL Operation	2 driving cycles
Sequence of Operation	None

Typical Enabling Conditions

Monitor runs whenever following DTCs not present	P0011 (VVT System 1 - Advance) P0012 (VVT System 1 - Retard) P0021 (VVT System 2 - Advance) P0022 (VVT System 2 - Retard) P0100 - P0103 (MAF meter) P0110 - P0113 (IAT sensor) P0115 - P0118 (ECT sensor) P0120 - P0223, P2135 (TP sensor) P0125 (Insufficient ECT for Closed Loop) P0171, P0172, P0174, P0175 (Fuel system) P0300 - P0306 (Misfire) P0335 (CKP sensor) P0340 (CMP sensor) P0351 - P0356 (Igniter) P0450 - P0453 (EVAP press sensor) P0500 (VSS)
Engine	Running

ECT	4.4°C (40°F) or more
IAT	4.4°C (40°F) or more
Canister pressure sensor malfunction	Not detected
Purge VSV	Not operated by scan tool
EVAP system check	Not operated by scan tool
Battery voltage	10 V or more
Purge duty cycle	8 % or more

Typical Malfunction Thresholds

Both of following conditions met	Conditions 1 and 2
1. EVAP pressure change when purge operation started	Less than 0.1 kPa-g (0.75 mmHg-g)
2. EVAP pressure change during purge operation when vent valve closed	Less than 0.5 kPa-g (3.75 mmHg-g)

MONITOR RESULT

Refer to CHECKING MONITOR STATUS (See page ES-20).

DTC	P0450	Evaporative Emission Control System Pressure Sensor / Switch

DTC	P0451	Evaporative Emission Control System Pressure Sensor Range / Performance

DTC	P0452	Evaporative Emission Control System Pressure Sensor / Switch Low Input

DTC	P0453	Evaporative Emission Control System Pressure Sensor / Switch High Input

ES

DTC SUMMARY

DTC	Monitoring Items	Malfunction Detection Conditions	Trouble Areas	Detection Timings	Detection Logic
P0450	Canister pressure sensor voltage fluctuation abnormal	Sensor output voltage rapidly fluctuates beyond upper and lower malfunction thresholds for 0.5 seconds.	• Canister pump module • EVAP system hose (pipe from air inlet port to canister pump module, canister filter, fuel tank vent hose) • ECM	• EVAP monitoring (ignition OFF) • Ignition ON	1 trip
P0451	Canister pressure sensor noise	Sensor output voltage fluctuates frequently within certain time period.	• Canister pump module • Connector/wire harness (Canister pump module - ECM) • EVAP system hose (pipe from air inlet port to canister pump module, canister filter, fuel tank vent hose) • ECM	• EVAP monitoring (ignition OFF) • Engine running	2 trip
	Canister pressure sensor signal becomes fixed/flat	Sensor output voltage does not vary within certain time period.	• Canister pump module • Connector/wire harness (Canister pump module - ECM) • EVAP system hose (pipe from air inlet port to canister pump module, canister filter, fuel tank vent hose) • ECM	• EVAP monitoring (ignition OFF)	2 trip
P0452	Canister pressure sensor voltage low	Sensor output voltage less than 0.45 V for 0.5 seconds.	• Canister pump module • Connector/wire harness (Canister pump module - ECM) • EVAP system hose (pipe from air inlet port to canister pump module, canister filter, fuel tank vent hose) • ECM	• Ignition ON • EVAP monitoring (ignition OFF)	1 trip

DTC	Monitoring Items	Malfunction Detection Conditions	Trouble Areas	Detection Timings	Detection Logic
P0453	Canister pressure sensor voltage high	Sensor output voltage more than 4.9 V for 0.5 seconds.	• Canister pump module • Connector/wire harness (Canister pump module - ECM) • EVAP system hose (pipe from air inlet port to canister pump module, canister filter, fuel tank vent hose) • ECM	• Ignition ON • EVAP monitoring (ignition OFF)	1 trip

HINT:
The canister pressure sensor is built into the canister pump module.

ES

DESCRIPTION

The description can be found in the EVAP (Evaporative Emission) System (See page ES-352).

MONITOR DESCRIPTION

Canister Pressure Sensor Specification:

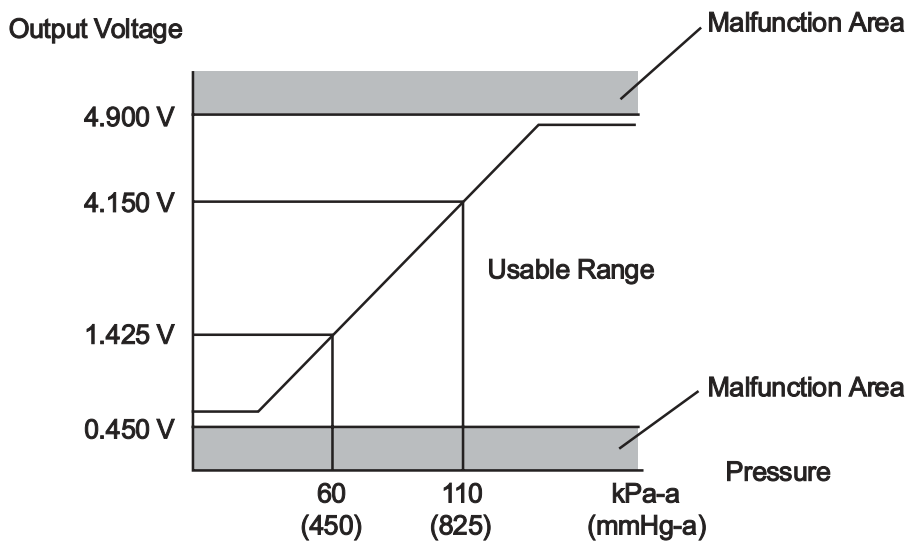

HINT:

Standard atmospheric pressure is 101.3 kPa-a (760 mmHg-a)

A115543E05

1. DTC P0450: Canister pressure sensor voltage abnormal fluctuation
   If the canister pressure sensor voltage output [pressure] rapidly fluctuates between less than 0.45 V [42.1 kPa-a (315.9 mmHg-a)] and more than 4.9 V [123.8 kPa-a (928.4 mmHg-a)], the ECM interprets this as an open or short circuit malfunction in the canister pressure sensor or its circuit, and stops the EVAP (Evaporative Emission) system monitor. The ECM then illuminates the MIL and sets the DTC (1 trip detection logic).

2. DTC P0451: Canister pressure sensor noise or fixed/flat
   If the canister pressure sensor voltage output fluctuates rapidly for 10 seconds, the ECM stops the EVAP system monitor. The ECM interprets this as noise from the canister pressure sensor, and stops the EVAP system monitor. The ECM then illuminates the MIL and sets the DTC.
   Alternatively, if the sensor voltage output does not change for 10 seconds, the ECM interprets this as the sensor being fixed/flat, and stops the monitor. The ECM then illuminates the MIL and sets the DTC. (Both the malfunctions are detected by 2 trip detection logic).
3. DTC P0452: Canister pressure sensor voltage low
   If the canister pressure sensor voltage output [pressure] is below 0.45 V [42.1 kPa-a (315.9 mmHg-a)], the ECM interprets this as an open or short circuit malfunction in the canister pressure sensor or its circuit, and stops the EVAP system monitor. The ECM then illuminates the MIL and sets the DTC (1 trip detection logic).
4. DTC P0453: Canister pressure sensor voltage high
   If the canister pressure sensor voltage output [pressure] is 4.9 V [123.8 kPa-a (928.4 mmHg-a)] or more, the ECM interprets this as an open or short circuit malfunction in the canister pressure sensor or its circuit, and stops the EVAP system monitor. The ECM then illuminates the MIL and sets the DTC (1 trip detection logic).

MONITOR STRATEGY

Required Sensors/Components	Canister pump module
Frequency of Operation	Once per driving cycle: P0451 sensor fixed/flat Continuous: P0451 sensor noise, P0450, P0452 and P0453
Duration	0.5 seconds: P0450, P0452 and P0453 Within 15 seconds: P0451
MIL Operation	Immediate: P0450, P0452 and P0453 2 driving cycles: P0451
Sequence of Operation	None

TYPICAL ENABLING CONDITIONS

P0451 (Noise monitor):

Monitor runs whenever following DTCs not present	None
Atmospheric pressure (absolute pressure)	70 to 110 kPa-a (525 to 825 mmHg-a)
Battery voltage	10.5 V or more
Intake air temperature	4.4°to 35°C (40° to 95°F)
Canister pressure sensor malfunction (P0450, P0452, 0453)	Not detected
Either of following conditions met	A or B
A. Engine condition	Running
B. Time after key off	5 or 7 or 9.5 hours

P0451 (Fixed/flat monitor):

Monitor runs whenever following DTCs not present	None
Battery voltage	10.5 V or more
Intake air temperature	4.4°to 35°C (40° to 95°F)
Canister pressure sensor malfunction (P0450, P0452, 0453)	Not detected
Atmospheric pressure (absolute pressure)	70 to 110 kPa-a (525 to 825 mmHg-a)
Time after key off	5 or 7 or 9.5 hours

P0450, P0452 and P0453:

Monitor runs whenever following DTCs not present	None
Either of following conditions met	(a) or (b)
(a) Ignition switch	ON
(b) Soak timer	ON

TYPICAL MALFUNCTION THRESHOLDS

P0450: Canister pressure sensor chattering

EVAP pressure	Less than 42.1 kPa-a (315.9 mmHg-a), or more than 123.8 kPa-a (928.4 mmHg-a)

P0451: Canister pressure sensor noise

Frequency that EVAP pressure change 0.3 kPa-g (2.25 mmHg-g) or more	10 times or more in 10 seconds

P0451: Canister pressure sensor fixed/flat

EVAP pressure change during reference pressure	Less than 0.65 kPa-g (4.87 mmHg-g)

P0452: Canister pressure sensor low voltage

EVAP pressure	Less than 42.1 kPa-a (315.9 mmHg-a)

P0453: Canister pressure sensor high voltage

EVAP pressure	More than 123.8 kPa-a (928.4 mmHg-a)

WIRING DIAGRAM

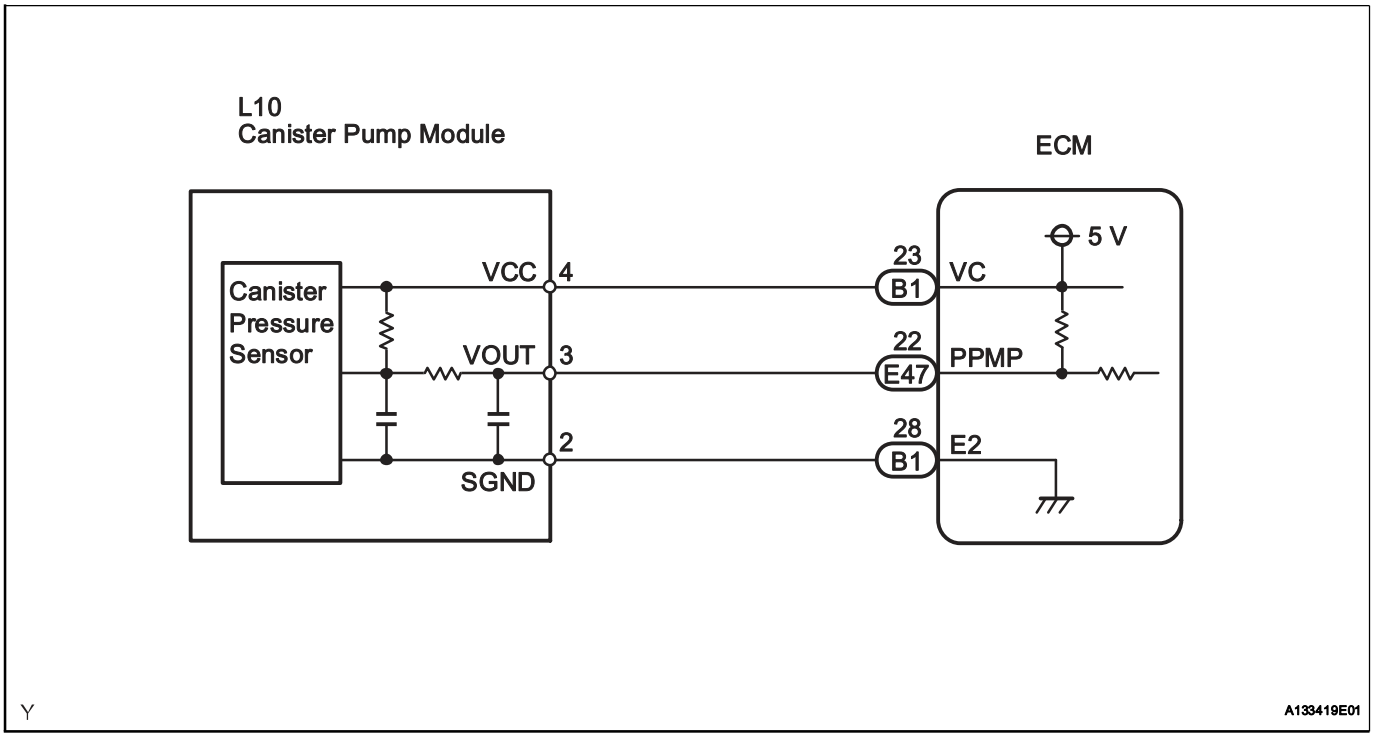

INSPECTION PROCEDURE

NOTICE:

- **When a vehicle is brought into the workshop, leave it as it is. Do not change the vehicle condition. For example, do not tighten the fuel cap.**
- **Do not disassemble the canister pump module.**
- **An intelligent tester is required to conduct the following diagnostic troubleshooting procedure.**

1	CONFIRM DTC AND EVAP PRESSURE

(a) Connect an intelligent tester to the DLC3.
(b) Turn the ignition switch ON (do not start the engine).

(c) Turn the tester ON.
(d) Select the following menu items: DIAGNOSIS / ENHANCED OBD II / DTC INFO / CURRENT CODES.
(e) Read DTCs.
(f) Select the following menu items: DIAGNOSIS / ENHANCED OBD II / DATA LIST / EVAP / VAPOR PRESS.
(g) Read the EVAP (Evaporative Emission) pressure displayed on the tester.

Result

Display (DTC Output)	Test Results	Suspected Trouble Areas	Proceed To
P0451	-	Canister pressure sensor	C
P0452	Less than 45 kPa-a (430 mmHg-a)	• Wire harness/connector (ECM - Canister pressure sensor) • Canister pressure sensor • Short in ECM circuit	A
P0453	More than 120 kPa-a (900 mmHg-a)	• Wire harness/connector (ECM - Canister pressure sensor) • Canister pressure sensor • Open in ECM circuit	B

B → Go to step 4

C → GO TO EVAP SYSTEM (See page ES-350)

A

2 CHECK HARNESS AND CONNECTOR (CANISTER PUMP MODULE - ECM)

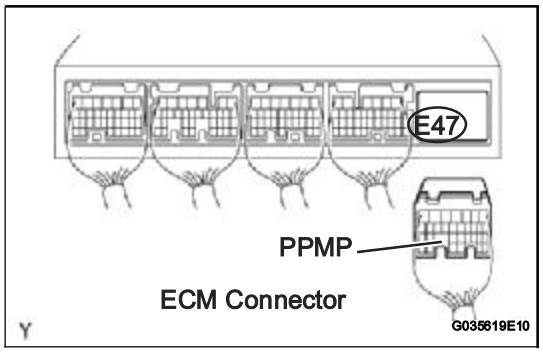

(a) Turn the ignition switch OFF.
(b) Disconnect the E47 ECM connector.
(c) Check the resistance between PPMP terminal of the ECM connector and the body ground.

Result

Test Results	Suspected Trouble Areas	Proceed To
10 Ω or less	• Wire harness/connector (ECM - Canister pressure sensor) • Short in canister pressure sensor circuit	A
10 kΩ or more	• Wire harness/connector (ECM - Canister pressure sensor) • Short in ECM circuit	B

(d) Reconnect the ECM connector.

B → Go to step 7

A

3	CHECK HARNESS AND CONNECTOR (CANISTER PUMP MODULE - ECM)

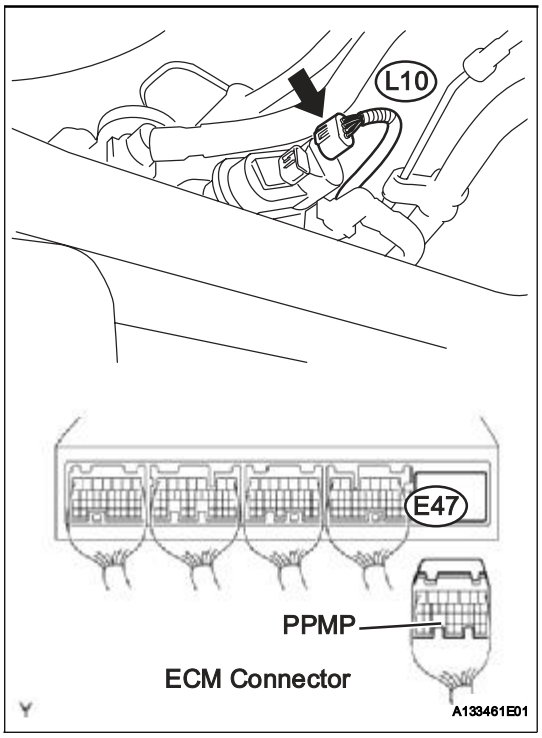

(a) Disconnect the L10 canister pump module connector.
(b) Disconnect the E47 ECM connector.
(c) Check the resistance between PPMP terminal of the ECM connector and the body ground.

ES

Result

Test Results	Suspected Trouble Areas	Proceed To
10 kΩ or more	Short in canister pressure sensor circuit	A
10 Ω or less	Short in wire harness/connector (ECM - Canister pressure sensor)	B

(d) Reconnect the canister pump module connector.
(e) Reconnect the ECM connector.

A	Go to step 5
B	Go to step 6

4 CHECK HARNESS AND CONNECTOR (CANISTER PUMP MODULE - ECM)

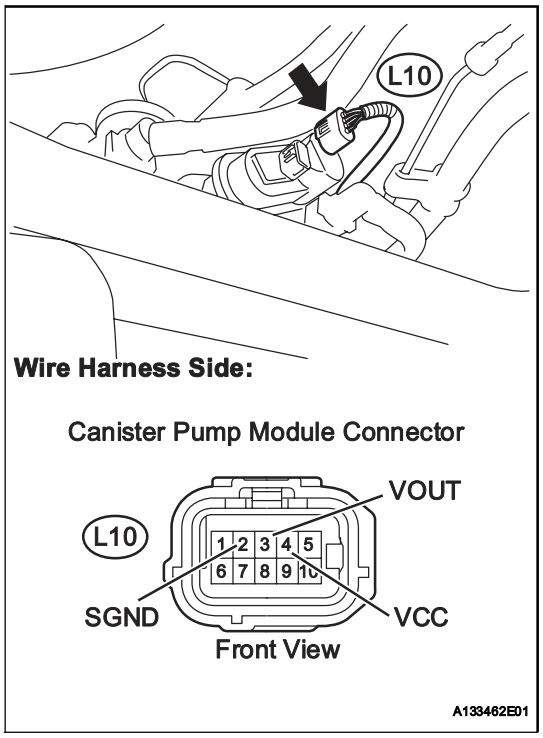

(a) Disconnect the L10 canister pump module connector.
(b) Turn the ignition switch ON.
(c) Measure the voltage and resistance of the canister pump module connector.

Standard

Tester Connections	Specified Conditions
VCC (L10-4) - Body ground	4.5 to 5.5 V
VOUT (L10-3) - Body ground	4.5 to 5.5 V
SGND (L10-2) - Body ground	100 Ω or less

ES

Result

Test Results	Suspected Trouble Areas	Proceed To
Voltage and resistance within standard ranges	Open in canister pressure sensor circuit	A
Voltage and resistance outside standard ranges	Open in wire harness/connector (ECM - Canister pressure sensor)	B

(d) Reconnect the canister pump module connector.

A	Go to step 5
B	Go to step 6

5 REPLACE CHARCOAL CANISTER ASSEMBLY

(a) Replace the canister assembly (See page EC-9).
NOTICE:
When replacing the canister, check the canister pump module interior and related pipes for water, fuel and other liquids. If liquids are present, check for disconnections and/or cracks in the following: 1) the pipe from the air inlet port to the canister pump module; 2) the canister filter; and 3) the fuel tank vent hose.

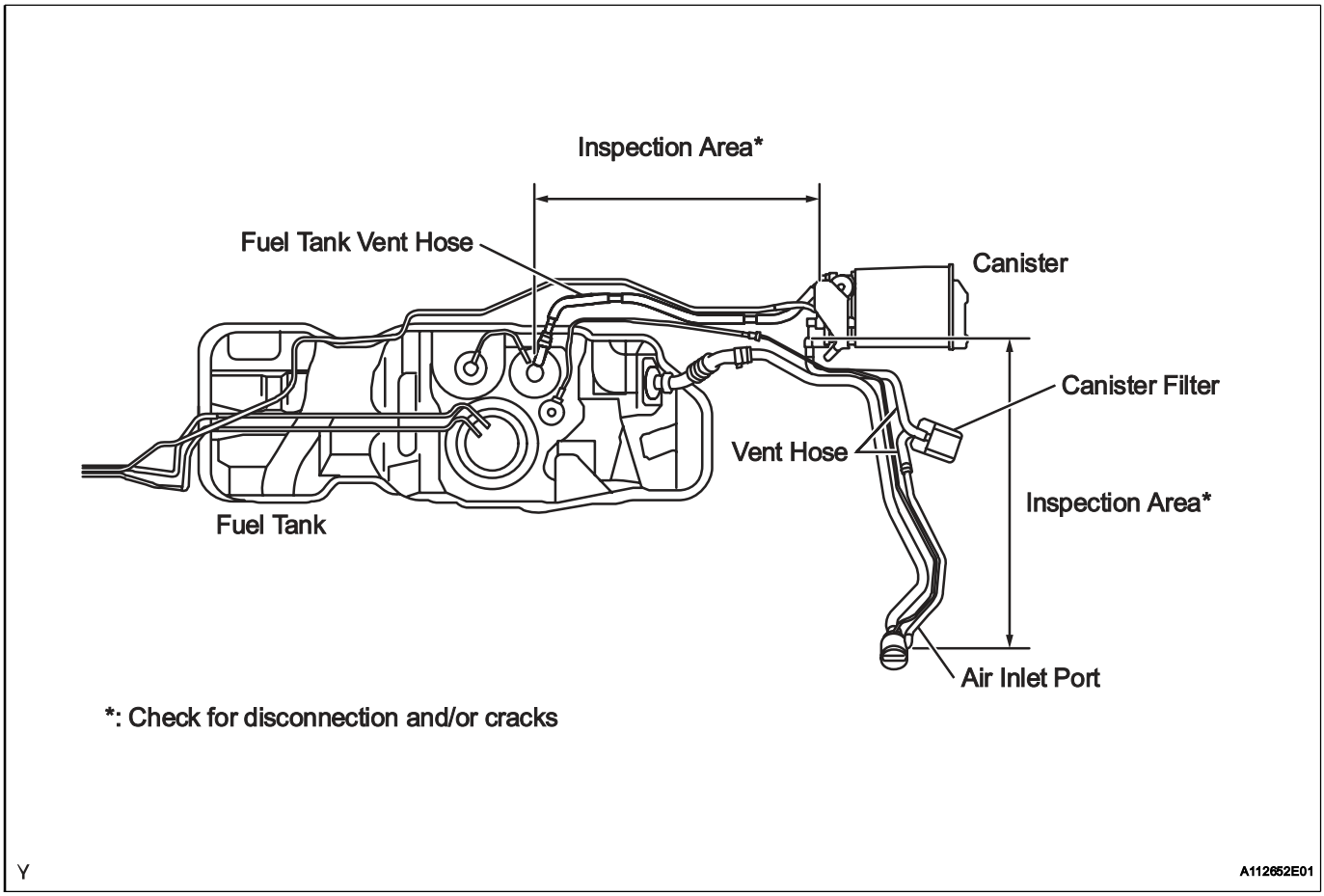

NEXT → **Go to step 8**

6	**REPAIR OR REPLACE HARNESS OR CONNECTOR**

HINT:
If the exhaust tail pipe has been removed, go to the next step before reinstalling it.

NEXT → **Go to step 8**

7	**REPLACE ECM**

(a) Replace the ECM (See page ES-446).

NEXT → **Go to step 8**

8	**CHECK WHETHER DTC OUTPUT RECURS (AFTER REPAIR)**

(a) Connect the intelligent tester to the DLC3.
(b) Turn the ignition switch ON and turn the tester ON.
(c) Wait for at least 60 seconds.
(d) On the tester, select the following menu items: DIAGNOSIS / ENHANCED OBD II / DTC INFO / PENDING CODES.

HINT:
If no pending DTCs are displayed on the tester, the repair has been successfully completed.

NEXT

COMPLETED

DTC	P0455	Evaporative Emission Control System Leak Detected (Gross Leak)

DTC	P0456	Evaporative Emission Control System Leak Detected (Very Small Leak)

DTC SUMMARY

DTCs	Monitoring Items	Malfunction Detection Conditions	Trouble Areas	Detection Timings	Detection Logic
P0455	EVAP gross leak	Leak detection pump creates negative pressure (vacuum) in EVAP system and EVAP system pressure measured. Reference pressure measured at start and at end of leak check. If stabilized pressure higher than [second reference pressure x 0.2], ECM determines that EVAP system has large leak.	• Fuel cap (loose) • Leakage from EVAP line (Canister - Fuel tank) • Leakage from EVAP line (Purge VSV - Canister) • Canister pump module • Leakage from fuel tank • Leakage from canister	While ignition switch OFF	2 trip
P0456	EVAP small leak	Leak detection pump creates negative pressure (vacuum) in EVAP system and EVAP system pressure measured. Reference pressure measured at start and at end of leak check. If stabilized pressure higher than second reference pressure, ECM determines that EVAP system has small leak.	• Fuel cap (loose) • Leakage from EVAP line (Canister - Fuel tank) • Leakage from EVAP line (Purge VSV - Canister) • Canister pump module • Leakage from fuel tank • Leakage from canister	While ignition switch OFF	2 trip

ES

DESCRIPTION

The description can be found in the EVAP (Evaporative Emission) System (See page ES-352).

INSPECTION PROCEDURE

Refer to the EVAP System (See page ES-357).

MONITOR DESCRIPTION

5 hours* after the ignition switch is turned to OFF, the leak detection pump creates negative pressure (vacuum) in the EVAP system. The ECM monitors for leaks and actuator malfunctions based on the EVAP pressure.

HINT:

*: If the engine coolant temperature is not below 35°C (95°F) 5 hours after the ignition switch is turned to OFF, the monitor check starts 2 hours later. If it is still not below 35°C (95°F) 7 hours after the ignition switch is turned to OFF, the monitor check starts 2.5 hours later.

Sequence	Operations	Descriptions	Duration
-	ECM activation	Activated by soak timer, 5 hours (7 or 9.5 hours) after ignition switch turned to OFF.	-
A	Atmospheric pressure measurement	Vent valve turned OFF (vent) and EVAP system pressure measured by ECM in order to register atmospheric pressure. If pressure in EVAP system not between 70 kPa-a and 110 kPa-a (525 mmHg-a and 825 mmHg-a), ECM cancels EVAP system monitor.	10 seconds
B	First reference pressure measurement	In order to determine reference pressure, leak detection pump creates negative pressure (vacuum) through reference orifice and then ECM checks if leak detection pump and vent valve operate normally.	60 seconds

Sequence	Operations	Descriptions	Duration
C	EVAP system pressure measurement	Vent valve turned ON (closed) to shut EVAP system. Negative pressure (vacuum) created in EVAP system, and EVAP system pressure then measured. Write down measured value as will be used in leak check. If EVAP pressure does not stabilize within 15 minutes, ECM cancels EVAP system monitor.	15 minutes*
D	Purge VSV monitor	Purge VSV opened and then EVAP system pressure measured by ECM. Large increase indicates normality.	10 seconds
E	Second reference pressure measurement	After second reference pressure measurement, leak check performed by comparing first and second reference pressure. If stabilized system pressure higher than second reference pressure, ECM determines that EVAP system leaking.	60 seconds
F	Final check	Atmospheric pressure measured and then monitoring result recorded by ECM.	-

* If only a small amount of fuel is in the fuel tank, it takes longer for the EVAP pressure to stabilize.

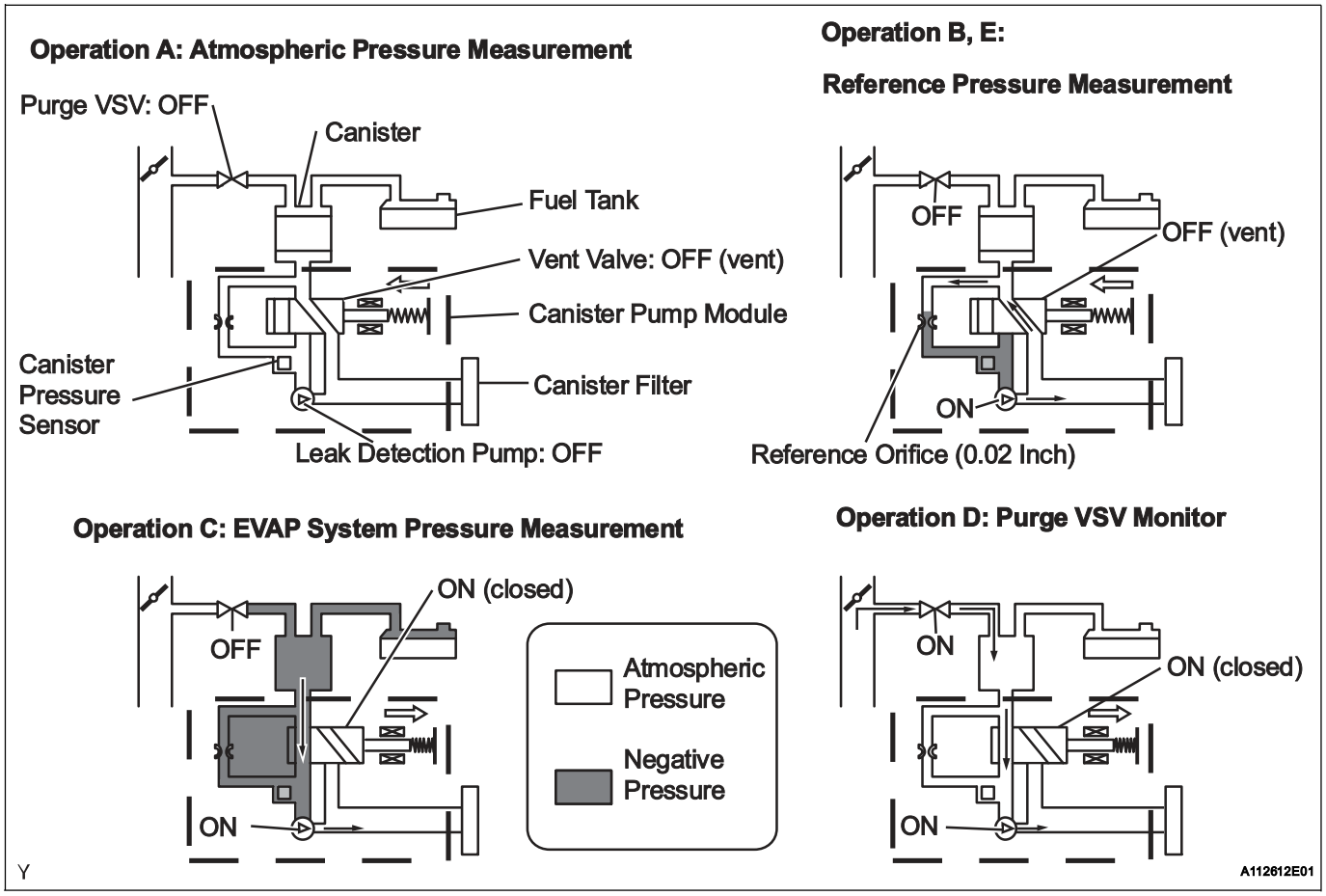

(a) P0455: EVAP gross leak

In operation C, the leak detection pump creates negative pressure (vacuum) in the EVAP system and the EVAP system pressure is measured. If the stabilized system pressure is higher than [second reference pressure x 0.2] (near atmospheric pressure), the ECM determines that the EVAP system has a large leakage, illuminates the MIL and sets the DTC (2 trip detection logic).

(b) P0456: EVAP very small leak
In operation C, the leak detection pump creates negative pressure (vacuum) in the EVAP system and the EVAP system pressure is measured. If the stabilized system pressure is higher than the second reference pressure, the ECM determines that the EVAP system has a small leakage, illuminates the MIL and sets the DTC (2 trip detection logic).

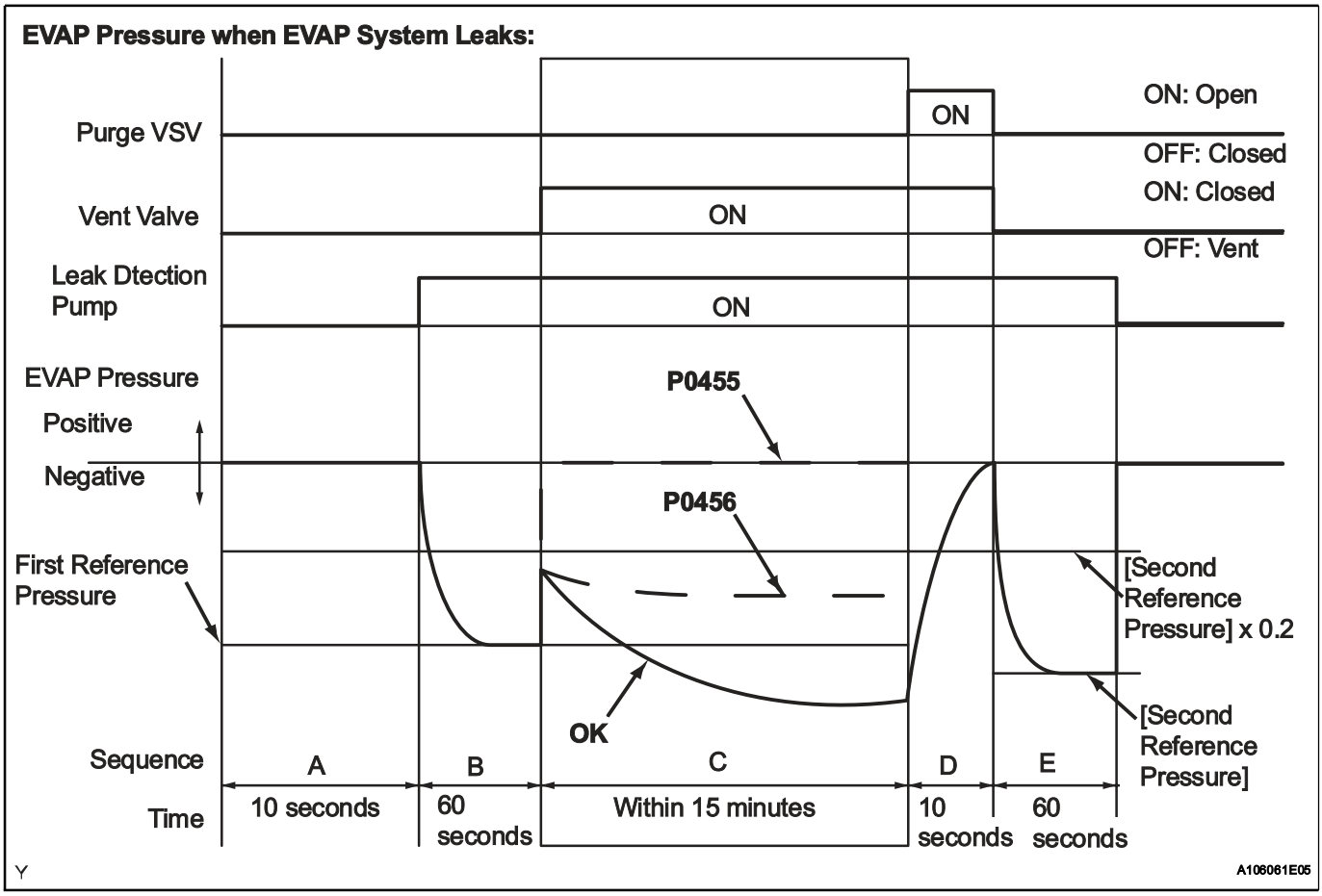

MONITOR STRATEGY

Required Sensors/Components	Purge VSV and canister pump module
Frequency of Operation	Once per driving cycle
Duration	Within 15 minutes (varies with amount of fuel in tank)
MIL Operation	2 driving cycles
Sequence of Operation	None

TYPICAL ENABLING CONDITIONS

Monitor runs whenever following DTCs not present	None
EVAP key-off monitor runs when all of following conditions met	-
Atmospheric pressure	70 to 110 kPa-a (525 to 825 mmHg-a)
Battery voltage	10.5 V or more
Vehicle speed	Below 2.5 mph (4 km/h)
Ignition switch	OFF
Time after key off	5 or 7 or 9.5 hours
Canister pressure sensor malfunction (P0450, P0451, P0452 and P0453)	Not detected
Purge VSV	Not operated by scan tool
Vent valve	Not operated by scan tool

Leak detection pump	Not operated by scan tool
Both of following conditions met before key off	Conditions 1 and 2
1. Duration that vehicle driven	5 minutes or more
2. EVAP purge operation	Performed
ECT	4.4° to 35°C (40° to 95°F)
IAT	4.4°to 35°C (40° to 95°F)

1. Key-off monitor sequence 1 to 8

1. Atmospheric pressure measurement

Next sequence run if following condition set	-
Atmospheric pressure change	Less than 0.3 kPa-g (2.25 mmHg-g) in 1 second

2. First reference pressure measurement

Next sequence run if all of following conditions set	Condition 1, 2 and 3
1. EVAP pressure just after reference pressure measurement start	-1 kPa-g (-7.5 mmHg-g) or less
2. Reference pressure	-4.85 to -1.057 kPa-g (-36.4 to -7.93 mmHg-g)
3. Reference pressure	Saturated within 60 seconds

3. Vent valve stuck closed check

Next sequence run if following condition set	-
EVAP pressure change after vent valve ON (closed)	0.3 kPa-g (2.25 mmHg-g) or more

4. Vacuum introduction

Next sequence run if following condition set	-
EVAP pressure	Saturated within 15 minutes

5. Purge VSV stuck closed check

Next sequence run if following condition set	-
EVAP pressure change after purge VSV ON (open)	0.3 kPa-g (2.25 mmHg-g) or more

6. Second reference pressure measurement

Next sequence run if all of following conditions set	Condition 1, 2, 3 and 4
1. EVAP pressure just after reference pressure	-1 kPa-g (-7.5 mmHg-g) or less
2. Reference pressure	-4.85 to -1.057 kPa-g (-36.4 to -7.93 mmHg-g)
3. Reference pressure	Saturated within 60 seconds
4. Reference pressure difference between first and second	Less than 0.7 kPa-g (5.25 mmHg-g)

7. Leak check

Next sequence run if following condition set	-
EVAP pressure when vacuum introduction complete	Second reference pressure or less

8. Atmospheric pressure measurement

EVAP monitor complete if following condition set	-
Atmospheric pressure difference between sequence 1 and 8	Within 0.3 kPa-g (2.25 mmHg-g)

TYPICAL MALFUNCTION THRESHOLDS

P0455: EVAP gross leak

EVAP pressure when vacuum introduction complete	Higher than reference pressure x 0.2

P0456: EVAP small leak

EVAP pressure when vacuum introduction complete	Between reference pressure and reference pressure x 0.2

MONITOR RESULT

Refer to CHECKING MONITOR STATUS (See page ES-20).

DTC	P0500	Vehicle Speed Sensor "A"

DESCRIPTION

Automatic Transmission Models:

Vehicles, which are equipped with ABS (Anti-lock Brake System), detect the vehicle speed using the skid control ECU and wheel speed sensor. The wheel speed sensor monitors the wheel rotation speed and sends a signal to the skid control ECU. The skid control ECU converts the wheel speed signal into a 4-pulse signal and transmits it to the ECM via the combination meter. The ECM determines the vehicle speed based on the frequency of the pulse signal.

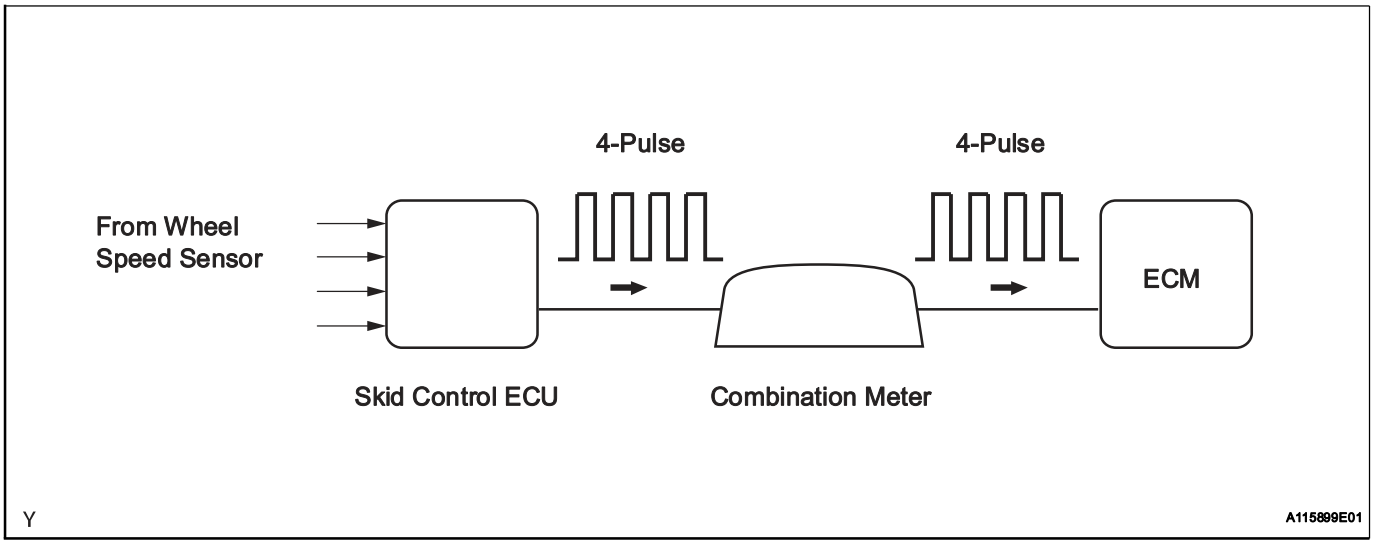

Manual Transmission Models:

Vehicles, which are equipped with manual transmission, detect the vehicle speed using the No. 1 vehicle speed sensor. The No. 1 vehicle speed sensor transmits a 4-pulse signal for every revolution of the rotor shaft, which is rotated by the transmission or transfer output shaft via the driven gear. The 4-pulse signal is converted into a more precise rectangular waveform by the waveform shaping circuit inside the combination meter. The signal is then transmitted to the ECM. The ECM determines the vehicle speed based on the frequency of the pulse signal.

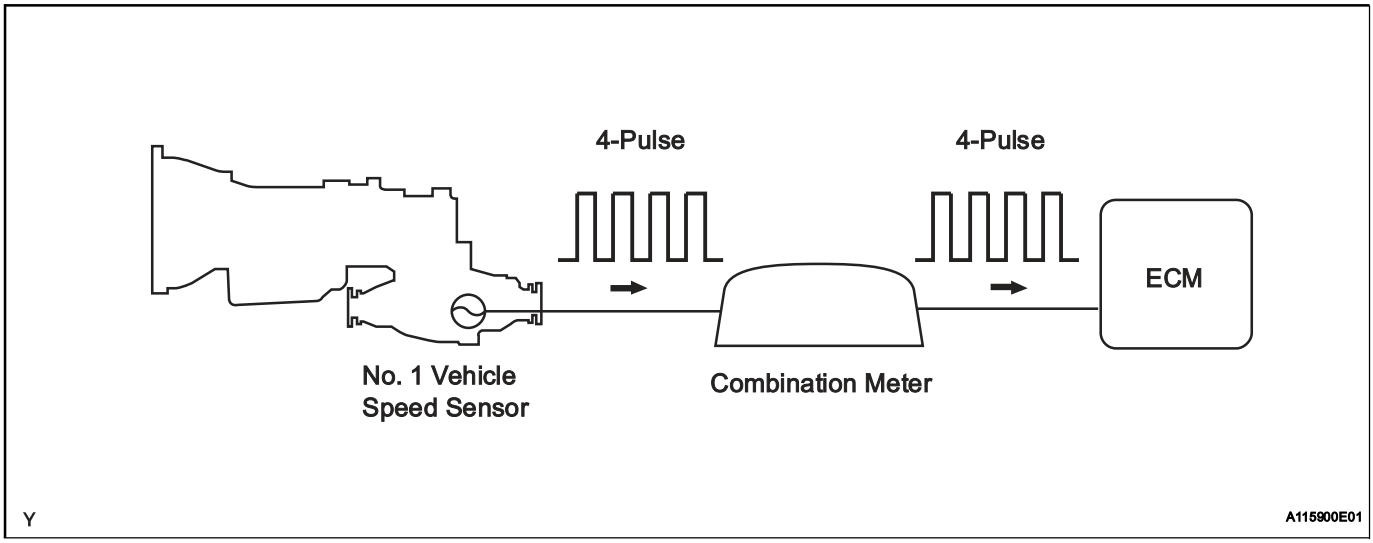

DTC No.	DTC Detection Conditions	Trouble Areas
P0500	Automatic Transmission Models: ECM detects following conditions simultaneously 500 times (1 trip detection logic) • No SP1 (speed sensor) signal while ECM detects SP2 (No. 2 speed sensor) signal • Vehicle speed 6 mph (9 km/h) or more for 4 seconds • Park/Neutral position switch OFF (shift lever other than P and N positions) • Transfer lever in other than N position (4WD)	• Open or short in speed signal circuit • Vehicle speed sensor • Combination meter • ECM • Skid control ECU
	Manual Transmission Models: Following conditions met for 5 seconds or more (2 trip detection logic): • Engine coolant temperature 70°C (158°F) or more • Engine speed 1,500 to 4,000 rpm • Fuel cut at high engine speed not executing • Engine load 31.6 % or more	

ES

MONITOR DESCRIPTION

Automatic Transmission Models:

The ECM assumes that the vehicle is being driven, while the vehicle speed sensor signal is being transmitted by the combination meter. If there is no signal from the combination meter, despite the ECM detecting the speed signal from the speed sensor No. 2, the ECM interprets this as a malfunction in the speed signal circuit. The ECM then illuminates the MIL and sets a DTC.

Manual Transmission Models:

The ECM assumes that the vehicle is being driven, when the indicated engine speed is more than 1,500 rpm and the engine load calculated by the ECM is more than certain level. If there is no signal from the vehicle speed sensor, despite these conditions being met, the ECM interprets this as a malfunction in the speed signal circuit. The ECM then illuminates the MIL and sets a DTC.

MONITOR STRATEGY

Related DTCs	P0500: Vehicle speed sensor "A" pulse input error
Required Sensors/Components (Main)	Vehicle Speed Sensor (VSS), Combination meter and Skid control ECU
Required Sensors/Components (Related)	Park/neutral Position (PNP) switch, Engine Coolant Temperature (ECT) sensor, Crankshaft Position (CKP) sensor and Mass Air Flow (MAF) meter
Frequency of Operation	Continuous
Duration	8 seconds: Manual transmission Conditions met 500 times: Automatic transmission
MIL Operation	2 driving cycles: Manual transmission Immediate: Automatic transmission
Sequence of Operation	None

TYPICAL ENABLING CONDITIONS

Monitor runs whenever following DTCs not present	None

Automatic Transmission:

Time after following conditions met:	4 seconds or more
Ignition switch	ON
Park/neutral position switch	OFF
Vehicle speed	5.59 mph (9 km/h) or more
Time after ignition switch OFF to ON	More than 0.5 seconds
Transfer neutral switch (only for 4WD)	Not N position

Manual Transmission:

Engine coolant temperature	70°C (158°F) or more

Engine speed	1,500 to 4,000 rpm
Fuel cut at high engine speed	Not executing
Engine load	31.6 % or more

TYPICAL MALFUNCTION THRESHOLDS

Vehicle speed sensor signal	No pulse input

WIRING DIAGRAM

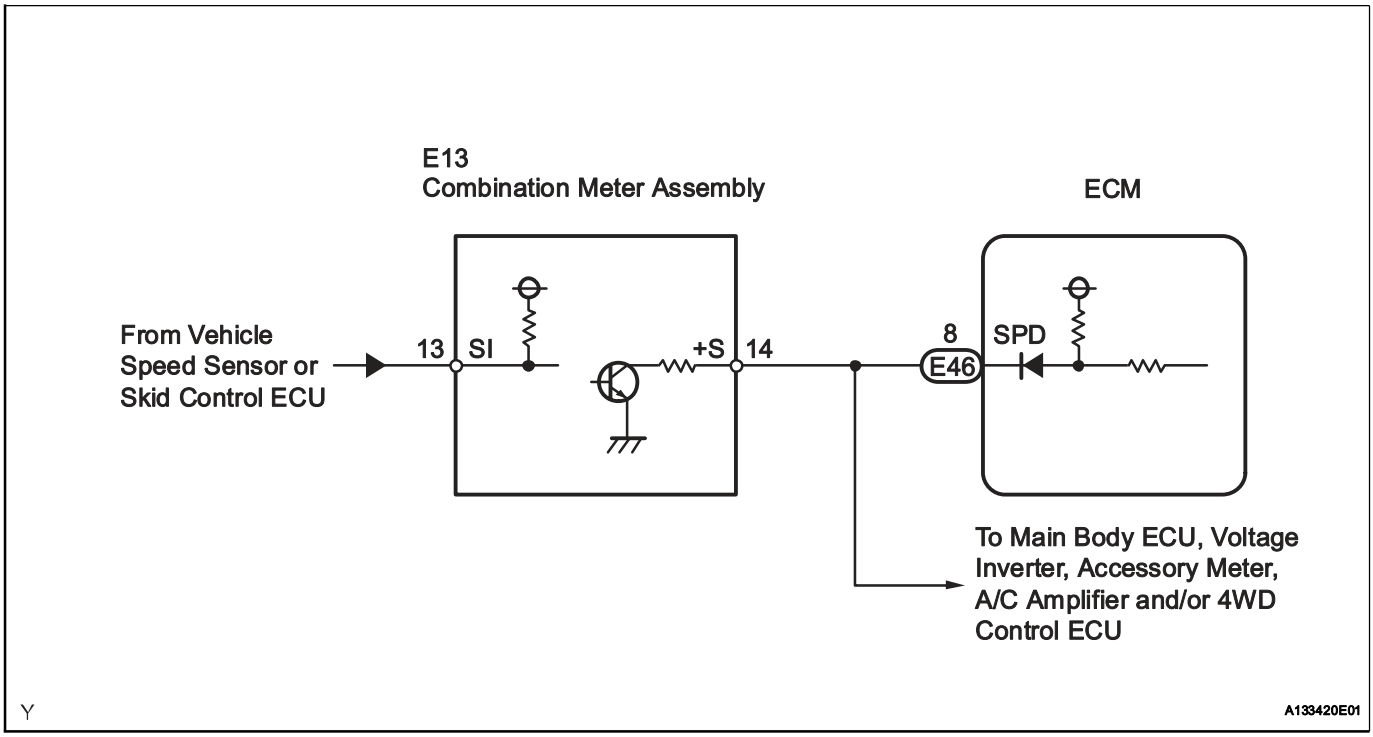

INSPECTION PROCEDURE

HINT:

Read freeze frame data using an intelligent tester. Freeze frame data record the engine condition when malfunctions are detected. When troubleshooting, freeze frame data can help determine if the vehicle was moving or stationary, if the engine was warmed up or not, if the air-fuel ratio was lean or rich, and other data, from the time the malfunction occurred.

1	CHECK OPERATION OF SPEEDOMETER

(a) Drive the vehicle and check if the operation of the speedometer in the combination meter is normal.

HINT:

- The vehicle speed sensor is operating normally if the speedometer reading is normal.
- If the speedometer does not operate, check it by following the procedure described in Speedometer Malfunction (See page ME-37).

NG	GO TO MALFUNCTION IN SPEEDOMETER

OK

2	INSPECT ECM (SPD VOLTAGE)

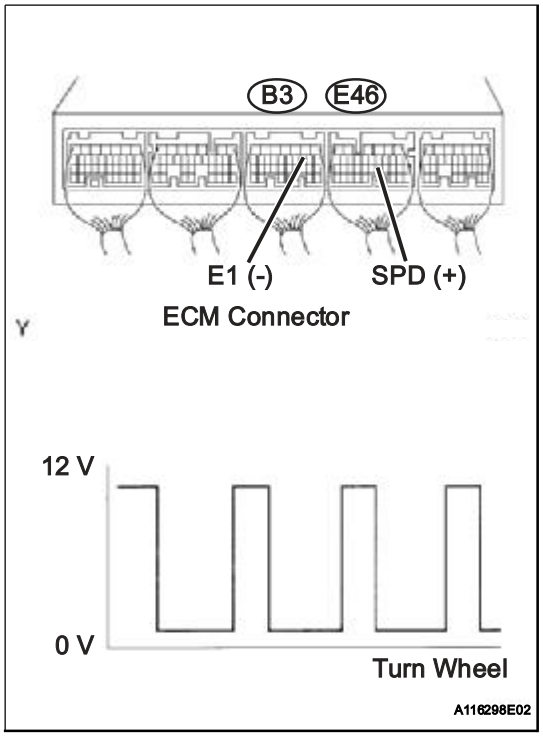

(a) Shift the transmission gear selector lever to the neutral position.
(b) Jack up the vehicle.
(c) Turn the ignition switch ON.
(d) Check the voltage between the terminals of the B3 and E46 ECM connectors as the wheel is turned slowly.

Standard

Tester Connections	Specified Conditions
SPD (E46-8) - E1 (B3-1)	Voltage generated intermittently

HINT:
The output voltage should fluctuate up and down similarly to the diagram on the left when the wheel is turned slowly.

NG → **REPAIR OR REPLACE HARNESS OR CONNECTOR**

OK

REPLACE ECM (See page ES-446)

DTC	P0504	Brake Switch "A" / "B" Correlation

DESCRIPTION

The stop light switch is a duplex system that transmits two signals: STP and ST1-. These two signals are used by the ECM to monitor whether or not the brake system is working properly. If the signals, which indicate the brake pedal is being depressed and released, are detected simultaneously, the ECM interprets this as a malfunction in the stop light switch and sets the DTC.

HINT:

The normal conditions are as shown in the table below. The signals can be read using an intelligent tester.

Signals	Brake Pedal Released	In Transition	Brake Pedal Depressed
STP	OFF	ON	ON
ST1-	ON	ON	OFF

ES

DTC No.	DTC Detection Conditions	Trouble Areas
P0504	Conditions (a), (b) and (c) continue for 0.5 seconds or more (1 trip detection logic) (a) Ignition switch ON (b) Brake pedal released (c) STP signal OFF when ST1- signal OFF	• Short in stop light switch signal circuit • STOP fuse • Stop light switch • ECM

WIRING DIAGRAM

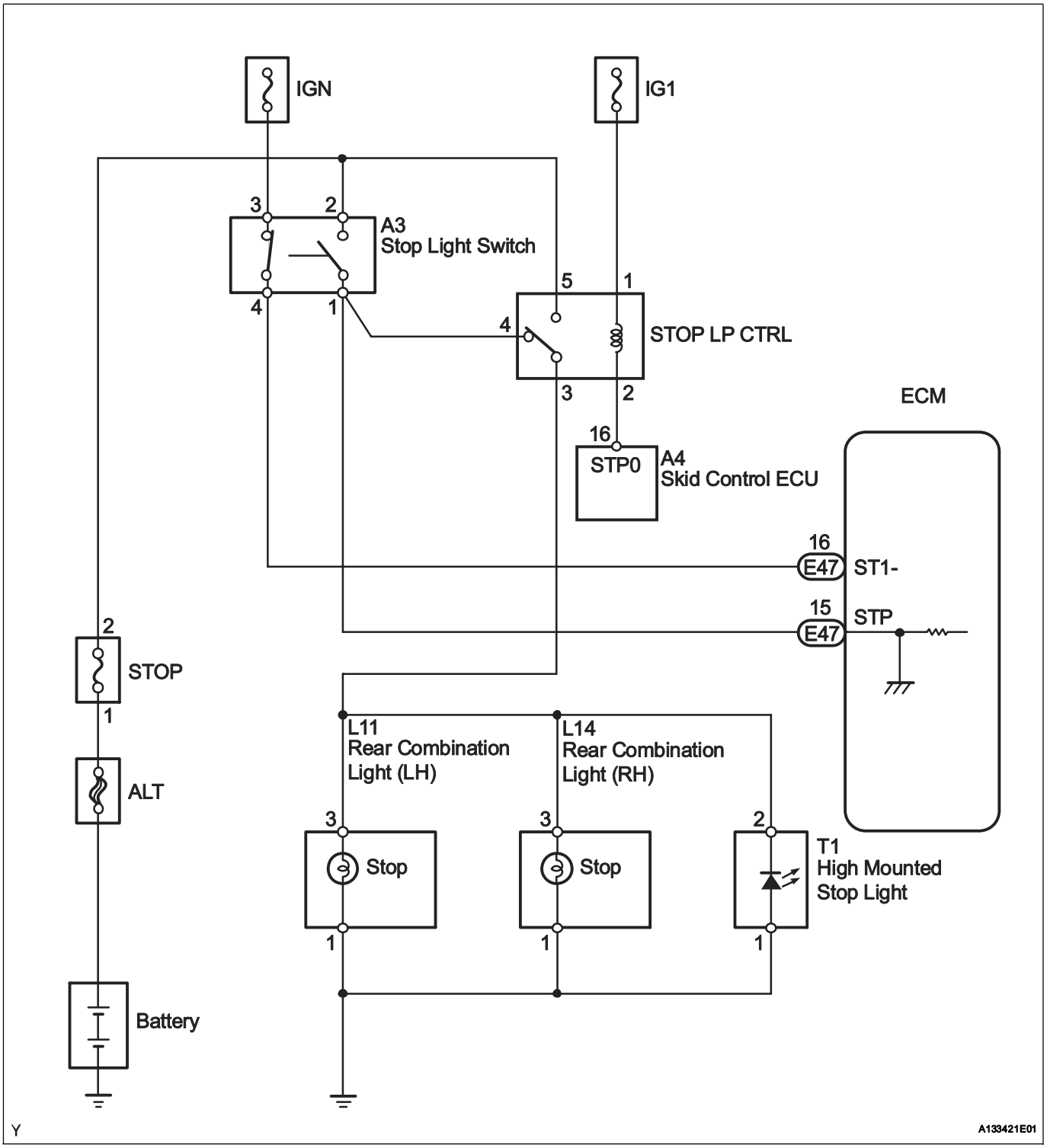

INSPECTION PROCEDURE

HINT:

Read freeze frame data using an intelligent tester. Freeze frame data record the engine condition when malfunctions are detected. When troubleshooting, freeze frame data can help determine if the vehicle was moving or stationary, if the engine was warmed up or not, if the air-fuel ratio was lean or rich, and other data, from the time the malfunction occurred.

1 CHECK OPERATION OF STOP LIGHT

(a) Check whether the stop lights turn on and off normally when the brake pedal is depressed and released.
OK:
Stop lights turn ON when brake pedal is depressed.

NG → **REPAIR OR REPLACE STOP LIGHT SWITCH CIRCUIT**

OK

ES

2 INSPECT STOP LIGHT SWITCH ASSEMBLY

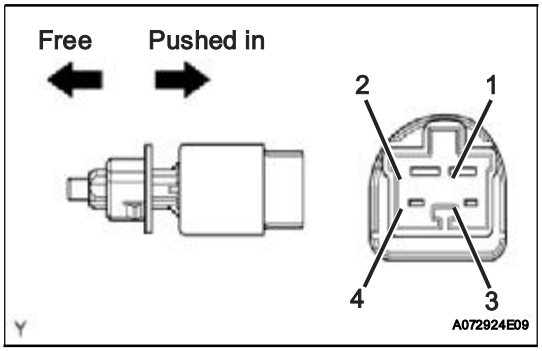

(a) Remove the stop light switch assembly.
(b) Check the resistance.
Standard Resistance

Switch Positions	Tester Connections	Specified Conditions
Switch pin free	1 - 2	Below 1 Ω
	3 - 4	10 kΩ or higher
Switch pin pushed in	1 - 2	10 kΩ or higher
	3 - 4	Below 1 Ω

(c) Reinstall the stop light switch assembly.

NG → **REPLACE STOP LIGHT SWITCH ASSEMBLY**

OK

3 READ VALUE USING INTELLIGENT TESTER (STP SIGNAL AND ST1- VOLTAGE)

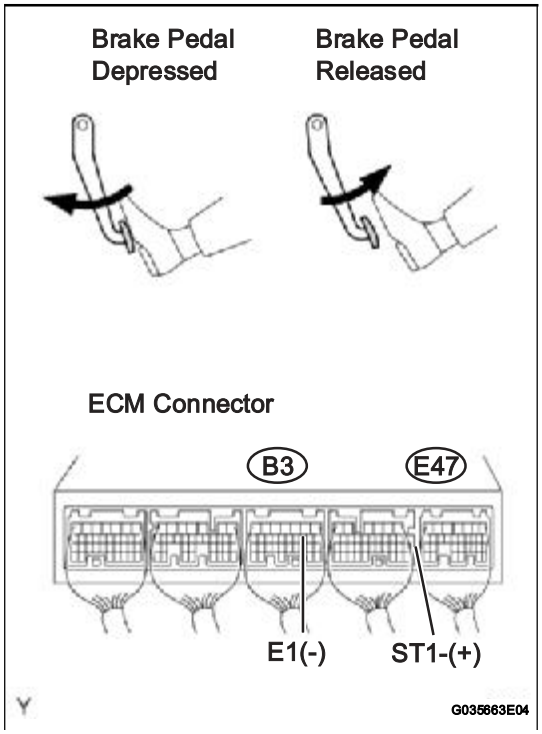

(a) Connect an intelligent tester to the DLC3.
(b) Turn the ignition switch ON and turn the tester ON.
(c) Select the following menu items: DIAGNOSIS / ENHANCED OBD II / DATA LIST / PRIMARY / STOP LIGHT SW.
(d) Check the STP signal when the brake pedal is depressed and released.
Standard

Brake Pedal Operations	Specified Conditions
Depressed	STP signal ON
Released	STP signal OFF

(e) Measure the voltage between the terminals of the B3 and E47 ECM connectors.
Standard Voltage

Tester Connections	Brake Pedal Operations	Specified Conditions
ST1- (E47-16) - E1 (B3-1)	Depressed	Below 1.5 V
	Released	7.5 to 14 V

OK → **CHECK FOR INTERMITTENT PROBLEMS**

NG

4	CHECK HARNESS AND CONNECTOR (STOP LIGHT SWITCH - ECM)

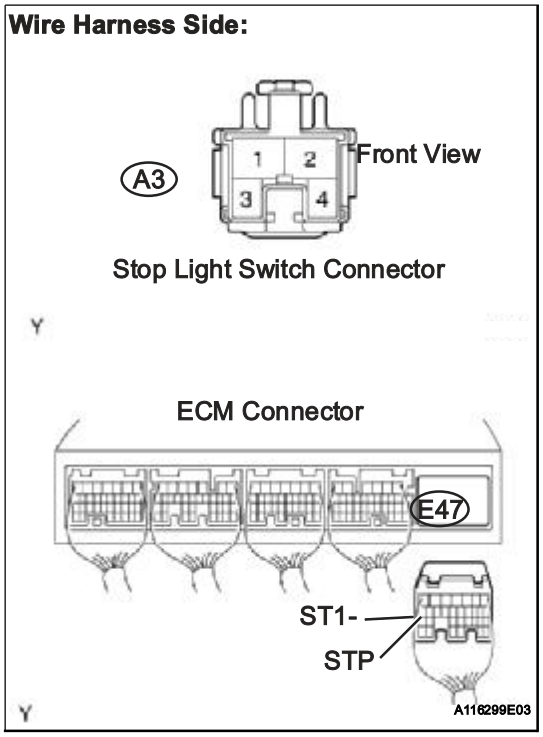

(a) Disconnect the A3 stop light switch connector.
(b) Disconnect the E47 ECM connector.
(c) Check the resistance.

Standard Resistance (Check for open)

Tester Connections	Specified Conditions
Stop light switch (A3-1) - STP (E47-15)	Below 1 Ω
Stop light switch (A3-4) - ST1- (E47-16)	

Standard Resistance (Check for short)

Tester Connections	Specified Conditions
Stop light switch (A3-1) or STP (E47-15) - Body ground	10 kΩ or higher
Stop light switch (A3-4) or ST1- (E47-16) - Body ground	

(d) Reconnect the stop light switch connector.
(e) Reconnect the ECM connector.

NG → **REPAIR OR REPLACE HARNESS OR CONNECTOR**

OK

REPLACE ECM (See page ES-446)

DTC	P0505	Idle Control System Malfunction

DESCRIPTION

The idling speed is controlled by the ETCS (Electronic Throttle Control System). The ETCS is comprised of: 1) the one valve type throttle body; 2) the throttle actuator, which operates the throttle valve; 3) the Throttle Position (TP) sensor, which detects the opening angle of the throttle valve; 4) the Accelerator Pedal Position (APP) sensor, which detects the accelerator pedal position; and 5) the ECM, which controls the ETCS. Based on the target idling speed, the ECM controls the throttle actuator to provide the proper throttle valve opening angle.

DTC No.	DTC Detection Conditions	Trouble Areas
P0505	Idling speed continues to vary greatly from target idling speed (2 trip detection logic)	• ETCS • Air induction system • PCV hose connection • ECM

ES

MONITOR DESCRIPTION

The ECM monitors the idling speed and idling air flow volume to conduct Idle Speed Control (ISC). The ECM determines that the ISC system is malfunctioning if the following conditions apply:

- The learned idling air flow volume remains at the maximum or minimum volume 5 times or more during a drive cycle.
- While driving at 6.25 mph (10 km/h) or more, the actual engine idling speed varies from the target idling speed by between 100 rpm and 200 rpm, 5 times or more during a drive cycle.

Example:

If the actual idling speed varies from the target idling speed by more than 200 rpm* 5 times during a drive cycle, the ECM illuminates the MIL and sets the DTC.

*: Threshold idling speed varies with engine load.

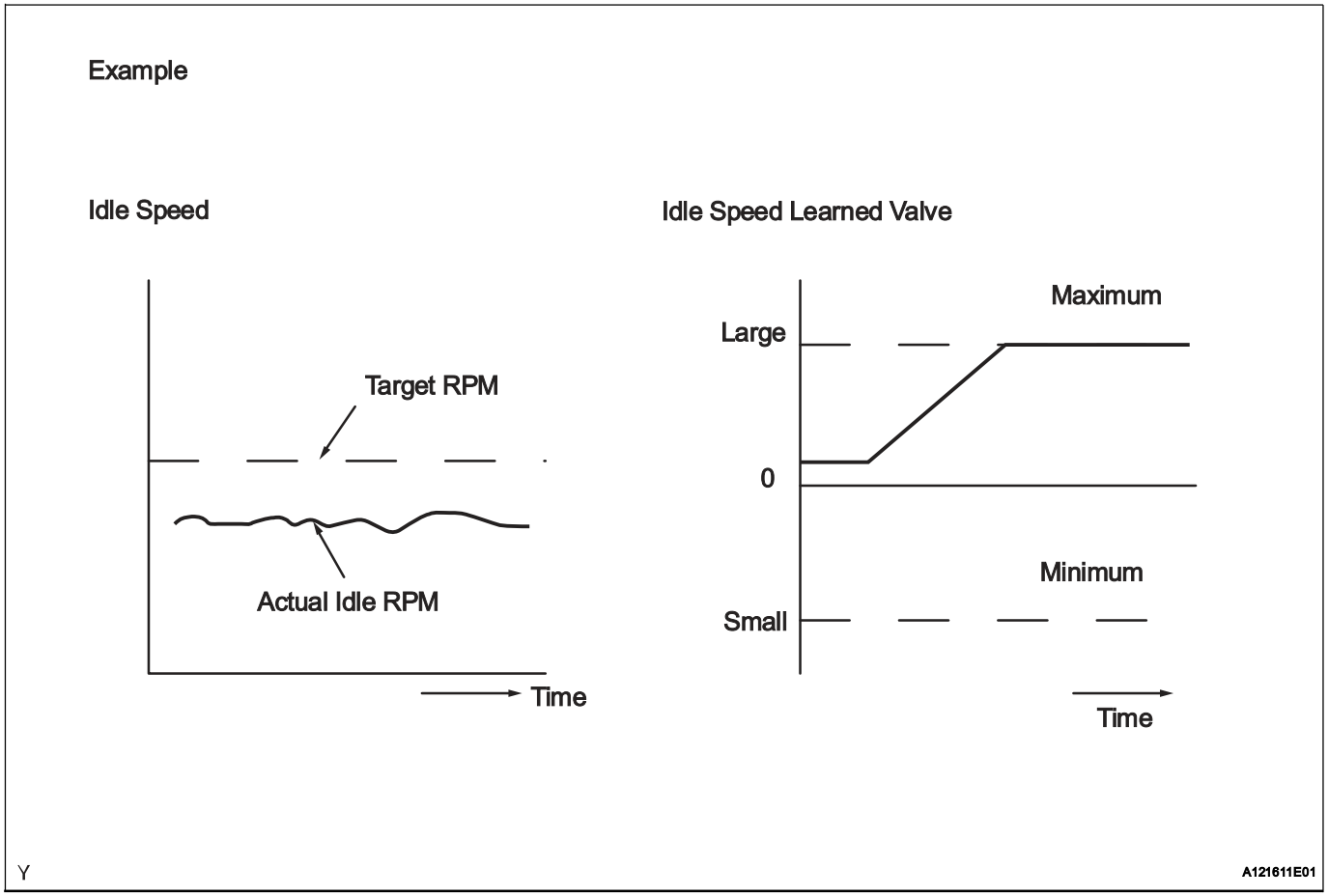

MONITOR STRATEGY

Related DTCs	P0505: ISC Function
Required Sensors/Components (Main)	ETCS
Required Sensors/Components (Related)	Crankshaft position sensor, Engine coolant temperature sensor, and Vehicle speed sensor
Frequency of Operation	Continuous
Duration	10 minutes
MIL Operation	2 driving cycles
Sequence of Operation	None

TYPICAL ENABLING CONDITIONS

Functional check:

Monitor runs whenever following DTCs not present	None
Engine	Running

TYPICAL MALFUNCTION THRESHOLDS

Functional check:

Either of following conditions 1 or 2 met	-
1. Frequency that following conditions (a) and (b) met	5 times or more
(a) Engine RPM - target engine RPM (A/C OFF and NSW OFF)	Below -100 rpm, or 150 rpm or more
(b) Vehicle condition	Stop after vehicle was driven by 6.25 mph (10 km/h) or more
2. Frequency that following conditions (c) and (d) met	Once
(c) Engine RPM - target engine RPM (A/C OFF and NSW OFF)	Below -100 rpm, or 150 rpm or more
(d) ISC airflow rate (learning value)	1.3 L/sec. or less, or 8.5 L/sec. or more

INSPECTION PROCEDURE

HINT:

- The following conditions may also cause DTC P0505 to be set:
  (1) The floor carpet overlapping slightly onto the accelerator pedal, causing the accelerator pedal to be slightly depressed and therefore the throttle valve position to be slightly open.
  (2) The accelerator pedal being not fully released.
- Read freeze frame data using an intelligent tester. Freeze frame data record the engine condition when malfunctions are detected. When troubleshooting, freeze frame data can help determine if the vehicle was moving or stationary, if the engine was warmed up or not, if the air-fuel ratio was lean or rich, and other data, from the time the malfunction occurred.

ES

1 CHECK ANY OTHER DTCS OUTPUT (IN ADDITION TO DTC P0505)

(a) Connect an intelligent tester to the DLC3.
(b) Turn the ignition switch ON.
(c) Turn the tester ON.
(d) Select the following menu items: DIAGNOSIS / ENHANCED OBD II / DTC INFO / CURRENT CODES.
(e) Read DTCs.

Result

Display (DTC Output)	Proceed To
P0505	A
P0505 and other DTCs	B

HINT:
If any DTCs other than P0505 are output, troubleshoot those DTCs first.

B → **GO TO DTC CHART (See page ES-57)**

A

2 CHECK PCV HOSE CONNECTIONS

OK:
PCV hose is connected correctly and is not damaged.

NG → **REPAIR OR REPLACE PCV HOSE**

OK

3 CHECK AIR INDUCTION SYSTEM

(a) Check the air induction system for vacuum leakage.
OK:
No leakage from air induction system.

NG → **REPAIR OR REPLACE AIR INDUCTION SYSTEM**

OK

4	CHECK THROTTLE VALVE

(a) Check the throttle valve condition.
OK:
Throttle valve is not contaminated with foreign objects and moves smoothly.

NG → **REPAIR OR REPLACE THROTTLE WITH MOTOR BODY ASSEMBLY**

OK

REPLACE ECM (See page ES-446)

DTC	P050A	Cold Start Idle Air Control System Performance

DTC	P050B	Cold Start Ignition Timing Performance

DESCRIPTION

The Electronic Throttle Control System (ETCS) controls the engine idling speed. The ETCS operates the throttle actuator to open and close the throttle valve, and adjusts the intake air amount to achieve the target idling speed.
In addition, the ECM retards the ignition timing and the ETCS increases the intake air amount to quickly increase the catalyst temperature at cold start to reduce emissions.

ES

DTC No.	DTC Detection Conditions	Trouble Areas
P050A	Accumulated intake air amount during 10 seconds of idling after cold start, less than threshold (2 trip detection logic)	• Throttle body assembly • Mass air flow meter • Air induction system • PCV hose connections • VVT system • Air cleaner filter element • ECM
P050B	Ignition timing retard value insufficient for 5 seconds or more during 10 seconds of P050A monitoring duration at cold start (2 trip detection logic)	• Throttle body assembly • Mass air flow meter • Air induction system • PCV hose connections • VVT system • Air cleaner filter element • ECM

MONITOR DESCRIPTION

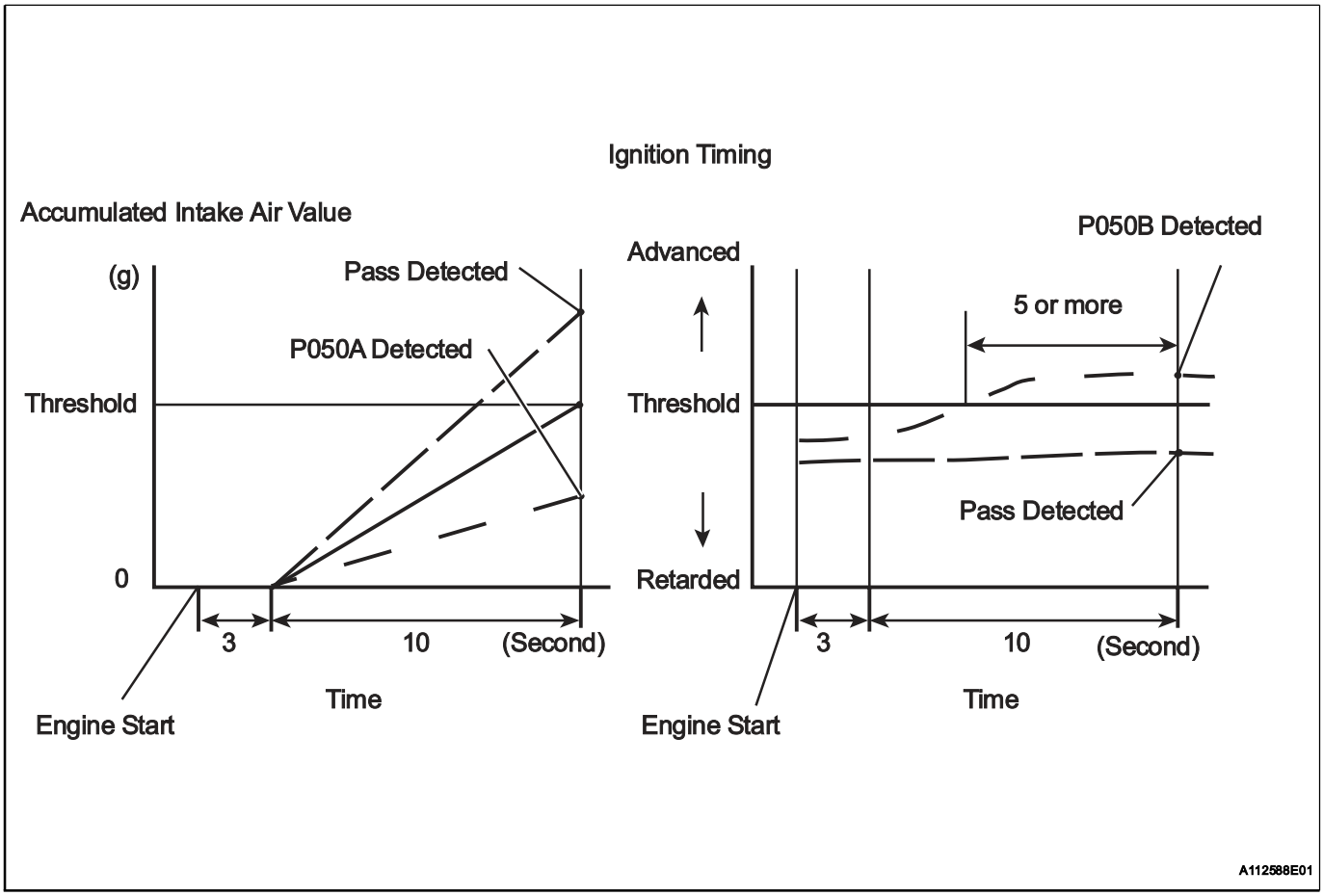

The ECM monitors the intake air amount during idling and the ignition timing.
When the Engine Coolant Temperature (ECT) is between -10°C and 50 °C (14°F and 122°F), the ECM calculates the idling intake air amount for 10 seconds, beginning 3 seconds after the engine starts.
When the accumulated value is below the threshold, the ECM interprets this as a malfunction in the Idle Speed Control (ISC) system at cold start.
The ECM also monitors the ignition timing at cold start, and judges it to be incorrect when it is advanced to the same value for a warm engine for 5 seconds or more of the 10 second monitoring period.
Example:
P050A is detected when all conditions below are met (2 trip detection logic).
1. The ECT is between -10°C and 50 °C (14°F and 122°F) when the engine starts.
2. The engine idles for 13 seconds after engine start.
3. The accumulated intake air amount is below the threshold.

The ECM sets the DTC and illuminates the MIL 13 seconds after the engine is next started.

NOTICE:

When the negative battery terminal is disconnected during inspection or repairs, the ISC learning values are cleared. The ISC learning must be performed by warming up the engine and idling for 5 minutes with the ECT at 75°C (167°F) or more because DTCs cannot be detected with the ISC learning values cleared.

MONITOR STRATEGY

Related DTCs	P050A: Idle speed control problem at cold P050B: Idle ignition timing problem at cold
Required Sensors/Components (Main)	Mass air flow meter
Required Sensors/Components (Related)	Engine Coolant Temperature (ECT) sensor, Throttle position sensor, Vehicle speed sensor
Frequency of Operation	Once per driving cycle
Duration	10 seconds
MIL Operation	2 driving cycles
Sequence of Operation	None

TYPICAL ENABLING CONDITIONS

P050A:

Battery voltage	8 V or more
Time after engine start	3 seconds or more
Starter	OFF
ECT at engine start	-10°C (14°F) or more
ECT	-10°C to 50°C (14°F to 122°F)
Engine idling time	3 seconds or more
Fuel-cut	OFF
Vehicle speed	Less than 1.875 mph (3 km/h)
Time after shift position changed (A/T)	1 second or more
Atmospheric pressure	76 kPa (570 mmHg) or more

P050B:

Battery voltage	8 V or more
Time after engine start	3 seconds or more
Starter	OFF
ECT at engine start	-10°C (14°F) or more
ECT	-10°C to 50°C (14°F to 122°F)
Engine idling time	3 seconds or more
Fuel-cut	OFF
Vehicle speed	Less than 1.875 mph (3 km/h)

TYPICAL MALFUNCTION THRESHOLDS

P050A:

Accumulated air flow amount (M/T)	Varies with ECT (Example: Less than 42.5 g)
Accumulated air flow amount (A/T)	Varies with ECT (Example: Less than 47.5 g)

P050B:

Accumulated time when ignition timing retard value insufficient	5 seconds or more

INSPECTION PROCEDURE

HINT:

Read freeze frame data using an intelligent tester. Freeze frame data record the engine condition when malfunctions are detected. When troubleshooting, freeze frame data can help determine if the vehicle was moving or stationary, if the engine was warmed up or not, if the air-fuel ratio was lean or rich, and other data, from the time the malfunction occurred.

ES

1	CHECK ANY OTHER DTCS OUTPUT (IN ADDITION TO DTC P050A AND/OR P050B)

(a) Connect an intelligent tester to the DLC3.
(b) Turn the ignition switch ON.
(c) Turn the tester ON.
(d) Select the following the menu items: DIAGNOSIS / ENHANCED OBD II / DTC INFO / CURRENT CODES.
(e) Read the DTCs.

Result

Display (DTC Output)	Proceed To
P050A and/or P050B	A
P050A and/or P050B and other DTCs	B

HINT:

If any DTCs other than P050A and P050B are output, troubleshoot those DTCs first.

B → **GO TO DTC CHART (See page ES-57)**

A

2	READ VALUE USING INTELLIGENT TESTER (FUEL TRIM)

HINT:

Calculate the total fuel trim values to check the characteristic deviation of the mass air flow meter.

(a) Connect the intelligent tester to the DLC3.
(b) Turn the ignition switch ON.
(c) Turn the tester ON.
(d) Select the following menu items: DIAGNOSIS / ENHANCED OBD II / DATA LIST / PRIMARY / SHORT FT #1 and LONG FT #1, or SHORT FT #2 and LONG FT #2.
(e) Read the values displayed on the tester.
(f) Add together the SHORT FT #1 and LONG FT #1, or SHORT FT #2 and LONG FT #2 values to obtain the total FUEL TRIM.

OK:
Total of SHORT FT #1 and LONG FT #1, or SHORT FT #2 and LONG FT #2 values is between -20 % and 20 %.

OK → **Go to step 12**

NG

3 PERFORM ACTIVE TEST USING INTELLIGENT TESTER (OPERATE OCV)

(a) Connect the intelligent tester to the DLC3.
(b) Start the engine and turn the tester ON.
(c) Warm up the engine.
(d) Select the following menu items: DIAGNOSIS / ENHANCED OBD II / ACTIVE TEST / VVT CTRL B1 and VVT CTRL B2.
(e) Check the engine speed while operating the Oil Control Valve (OCV) using the tester.

OK

Tester Operations	Specified Conditions
OCV OFF	Normal engine speed
OCV ON	Engine idles roughly or stalls (soon after OCV switched from OFF to ON)

NG → **Go to step 8**

OK

4 CHECK PCV HOSE CONNECTIONS

OK:
PCV hose is connected correctly and is not damaged.

NG → **Go to step 9**

OK

5 CHECK AIR INDUCTION SYSTEM

(a) Check the air induction system for vacuum leakage.
OK:
No leakage from air induction system.

NG → **Go to step 10**

OK

6 CHECK AIR CLEANER FILTER ELEMENT SUB-ASSEMBLY

(a) Visually check that the air cleaner filter element is not excessively contaminated with dirt or oil.

OK:
Air cleaner filter element is not excessively contaminated with dirt or oil.

NG → **Go to step 11**

OK

7	REPLACE MASS AIR FLOW METER

Replace the mass air flow meter (See page ES-409).

NEXT → **Go to step 15**

ES

8	CHECK AND REPAIR VVT SYSTEM

NEXT → **Go to step 15**

9	REPAIR OR REPLACE PCV HOSE

NEXT → **Go to step 15**

10	REPAIR OR REPLACE AIR INDUCTION SYSTEM

NEXT → **Go to step 15**

11	REPLACE AIR CLEANER FILTER ELEMENT SUB-ASSEMBLY

NEXT → **Go to step 15**

12	CHECK THROTTLE VALVE

(a) Check for deposits around the throttle valve and throttle valve condition.
OK:
No deposits around throttle valve and throttle valve moves smoothly.

NG → **Go to step 14**

OK

13	REPLACE ECM

Replace the ECM (See page ES-446).

NEXT → **Go to step 15**

14	REPAIR OR REPLACE THROTTLE WITH MOTOR BODY ASSEMBLY

NEXT → Go to step 15

15	CHECK WHETHER DTC OUTPUT RECURS (DTC P050A AND/OR P050B)

NOTICE:
In this operation, the engine must be cold (the same level as the engine coolant temperature recorded in the freeze frame data).

(a) Connect the intelligent tester to the DLC3.
(b) Turn the ignition switch ON.
(c) Turn the tester ON.
(d) Clear DTCs (See page ES-38).
(e) Switch the ECM from normal mode to check mode using the tester (See page ES-42).
(f) Start the engine to idle for a minute.
OK:
Stable fast idling.
(g) Read DTCs.
OK:
No DTC output.

NEXT

END

ES

DTC	P0560	System Voltage

DESCRIPTION

The battery supplies electricity to the ECM even when the ignition switch is in the OFF position. This power allows the ECM to store data such as DTC history, freeze frame data and fuel trim values. If the battery voltage falls below a minimum level, these memories are cleared and the ECM determines that there is a malfunction in the power supply circuit. When the engine is next started, the ECM illuminates the MIL and sets the DTC.

DTC No.	DTC Detection Conditions	Trouble Areas
P0560	Open in ECM back up power source circuit (1 trip detection logic)	• Open in back up power source circuit • EFI fuse • ECM

HINT:
If DTC P0560 is set, the ECM does not store other DTCs.

MONITOR STRATEGY

Related DTCs	P0560: ECM system voltage
Required Sensors/Components (Main)	ECM
Required Sensors/Components (Related)	-
Frequency of Operation	Continuous
Duration	3 seconds
MIL Operation	Immediate (MIL illuminated after next engine start)
Sequence of Operation	None

TYPICAL ENABLING CONDITIONS

Monitor runs whenever following DTCs not present	None
Stand-by RAM	Initialized

TYPICAL MALFUNCTION THRESHOLDS

ECM power source	Less than 3.5 V

WIRING DIAGRAM

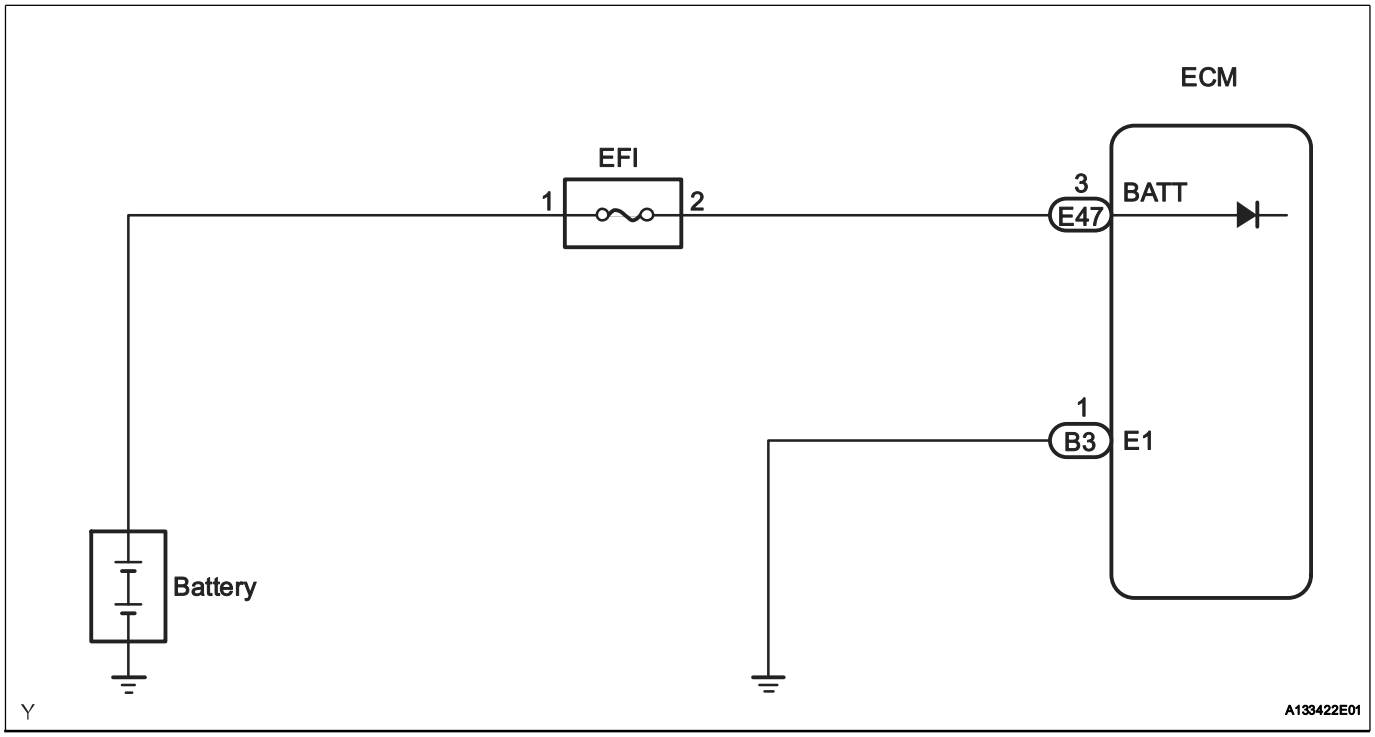

INSPECTION PROCEDURE

HINT:

Read freeze frame data using an intelligent tester. Freeze frame data record the engine condition when malfunctions are detected. When troubleshooting, freeze frame data can help determine if the vehicle was moving or stationary, if the engine was warmed up or not, if the air-fuel ratio was lean or rich, and other data, from the time the malfunction occurred.

1	CHECK FUSE (EFI FUSE)

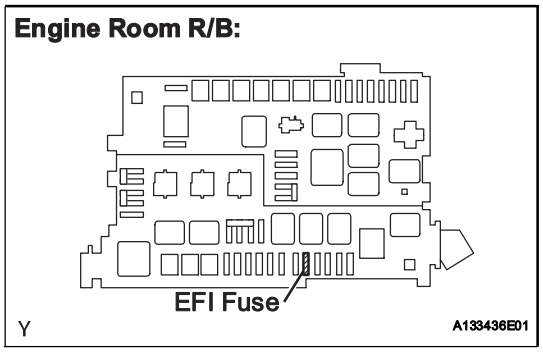

(a) Remove the EFI fuse from the engine room R/B.

(b) Check the EFI fuse resistance.

Standard Resistance:

Below 1 Ω

(c) Reinstall the EFI fuse.

NG → **CHECK FOR SHORT IN ALL HARNESSES AND CONNECTORS CONNECTED TO FUSE AND REPLACE FUSE**

OK

2 INSPECT ECM (BATT VOLTAGE)

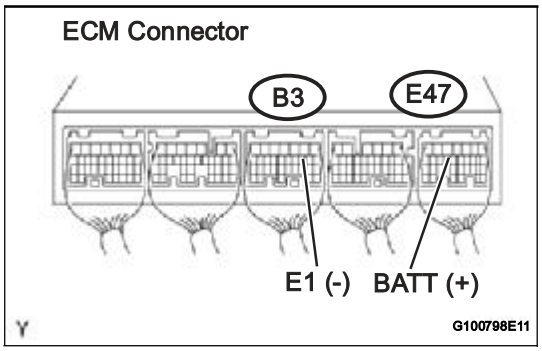

(a) Measure the voltage between the terminals of the B3 and E47 ECM connectors.

Standard Voltage

Tester Connections	Specified Conditions
BATT (E47-3) - E1 (B3-1)	11 to 14 V

NG → **Go to step 3**

OK

REPLACE ECM (See page ES-446)

3 CHECK HARNESS AND CONNECTOR (ECM - EFI FUSE, EFI FUSE - BATTERY)

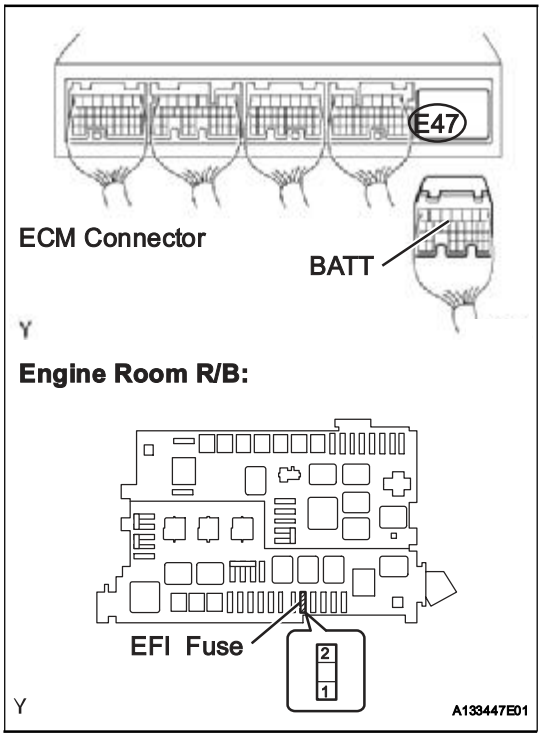

(a) Check the harness and the connector between the EFI fuse and ECM.
  (1) Remove the EFI fuse from the engine room R/B.
  (2) Disconnect the E47 ECM connector.
  (3) Check the resistance.

Standard Resistance (Check for open)

Tester Connections	Specified Conditions
EFI fuse (2) - BATT (E47-3)	Below 1 Ω

Standard Resistance (Check for short)

Tester Connections	Specified Conditions
EFI fuse (2) or BATT (E47-3) - Body ground	10 kΩ or higher

  (4) Reconnect the ECM connector.
  (5) Reinstall the EFI fuse.

(b) Check the harness and the connector between the EFI fuse and battery.
  (1) Remove the EFI fuse from the engine room R/B.
  (2) Disconnect the positive battery terminal.
  (3) Check the resistance.

Standard Resistance (Check for open)

Tester Connections	Specified Conditions
Battery positive terminal - EFI fuse (1)	Below 1 Ω

Standard Resistance (Check for short)

Tester Connections	Specified Conditions
Battery positive terminal or EFI fuse (1) - Body ground	10 kΩ or higher

  (4) Reconnect the positive battery terminal.
  (5) Reinstall the EFI fuse.

NG → **REPAIR OR REPLACE HARNESS OR CONNECTOR**

OK

4	INSPECT BATTERY

(a) Check that the battery is not depleted.
OK:
Battery is not depleted.

NG → **REPLACE BATTERY**

OK

CHECK AND REPLACE ENGINE ROOM RELAY BLOCK

DTC	P0604	Internal Control Module Random Access Memory (RAM) Error

DTC	P0606	ECM / PCM Processor

DTC	P0607	Control Module Performance

DTC	P0657	Actuator Supply Voltage Circuit / Open

ES

DESCRIPTION

The ECM continuously monitors its own internal memory status, internal circuits, and output signals transmitted to the throttle actuator. This self-check insures that the ECM is functioning properly. If any malfunction is detected, the ECM sets the appropriate DTC and illuminates the MIL.
The ECM memory status is diagnosed by internal mirroring of the main CPU and the sub CPU to detect Random Access Memory (RAM) errors. The two CPUs also perform continuous mutual monitoring. The ECM illuminates the MIL and sets a DTC if: 1) outputs from the two CPUs are different or deviate from the standards, 2) the signals sent to the throttle actuator deviate from the standards, 3) a malfunction is found in the throttle actuator supply voltage, and 4) any other ECM malfunction is found.

DTC No.	DTC Detection Conditions	Trouble Areas
P0604 P0606 P0607 P0657	ECM internal error (1 trip detection logic)	ECM

MONITOR STRATEGY

Related DTCs	P0604: ECM RAM error P0606: ECM range check P0607: ECM CPU malfunction P0657: ETCS power supply
Required Sensors/Components (Main)	ECM
Required Sensors/Components (Related)	-
Frequency of Operation	Once per driving cycle: P0657 Continuous: P0604, P0606, P0607
Duration	P0604: 6 times or more P0606, P0607 and P0657: Within 1 second
MIL Operation	Immediate
Sequence of Operation	None

TYPICAL ENABLING CONDITIONS

Monitor runs whenever following DTCs not present	None

TYPICAL MALFUNCTION THRESHOLDS

ECM RAM errors (P0604):

RAM mirror check	fail

ECM CPU range check (P0606):

Either of following conditions met:	-
Difference between throttle valve position of main CPU and throttle valve position of sub CPU	0.3 V or more
Difference between accelerator pedal position of main CPU and accelerator pedal position of sub CPU	0.3 V or more

ECM CPU malfunction (P0607):

Either A or B met	-
A. Following conditions met	
CPU reset	1 time or more
Learned TP - learned APP	0.4 V or more
Throttle actuator	OFF
B. CPU reset	2 times or more

Electronic throttle control system power supply function of ECM malfunctions (P0657):

ETCS (Electronic Throttle Control System) power supply when ignition switch turned ON	7 V or more

INSPECTION PROCEDURE

Read freeze frame data using an intelligent tester. Freeze frame data record the engine condition when malfunctions are detected. When troubleshooting, freeze frame data can help determine if the vehicle was moving or stationary, if the engine was warmed up or not, if the air-fuel ratio was lean or rich, and other data, from the time the malfunction occurred.

ES

1	CHECK ANY OTHER DTCS OUTPUT (IN ADDITION TO DTC P0604/P0606/P0607/P0657)

(a) Connect an intelligent tester to the DLC3.
(b) Turn the ignition switch ON.
(c) Turn the tester ON.
(d) Enter the following menus: DIAGNOSIS / ENHANCED II / DTC INFO / CURRENT CODES.
(e) Read the DTC.

Result

Display (DTC Output)	Proceed To
P0604, P0606, P0607, P0657	A
No output DTC	B

B → **GO TO DTC CHART (See page ES-57)**

A

REPLACE ECM (See page ES-446)

DTC	P0617	Starter Relay Circuit High

DESCRIPTION

While the engine is being cranked, the positive battery voltage is applied to terminal STA of the ECM. If the ECM detects the Starter Control (STA) signal while the vehicle is being driven, it determines that there is a malfunction in the STA circuit. The ECM then illuminates the MIL and sets the DTC.
This monitor runs when the vehicle is driven at 12.4 mph (20 km/h) for over 20 seconds.

DTC No.	DTC Detection Conditions	Trouble Areas
P0617	When conditions (a), (b) and (c) met for 20 seconds (1 trip detection logic) (a) Vehicle speed more than 12.4 mph (20 km/h) (b) Engine speed more than 1,000 rpm (c) STA signal ON	• Park/Neutral Position (PNP) switch (A/T*) • Clutch start switch (M/T*) • Starter relay circuit • Ignition switch • ECM

ES

*: A/T denotes Automatic Transmission models and M/T denotes Manual Transmission models.

MONITOR STRATEGY

Related DTCs	P0617: Starter signal
Required Sensors/Components (Main)	STARTER relay, PNP switch, Clutch start switch and Ignition switch
Required Sensors/Components (Related)	Vehicle Speed Sensor (VSS), Crankshaft Position (CKP) sensor
Frequency of Operation	Continuous
Duration	20 seconds
MIL Operation	Immediate
Sequence of Operation	None

TYPICAL ENABLING CONDITIONS

Monitor runs whenever following DTCs not present	None
Battery voltage	10.5 V or more
Vehicle speed	12.4 mph (20 km/h) or more
Engine speed	1,000 rpm or more

TYPICAL MALFUNCTION THRESHOLDS

Starter signal	ON

WIRING DIAGRAM

For Manual Transmission Models:

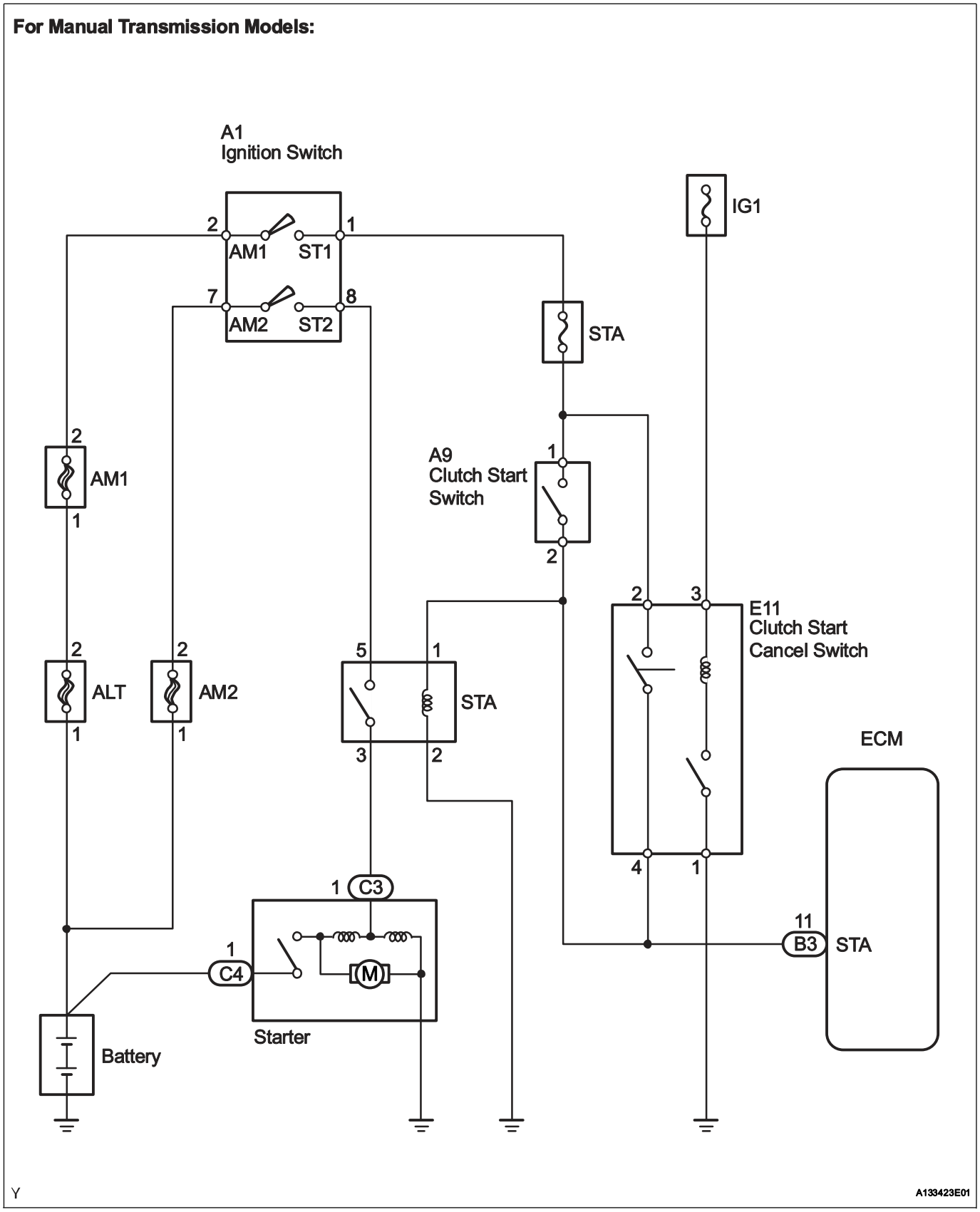

For Automatic Transmission Models:

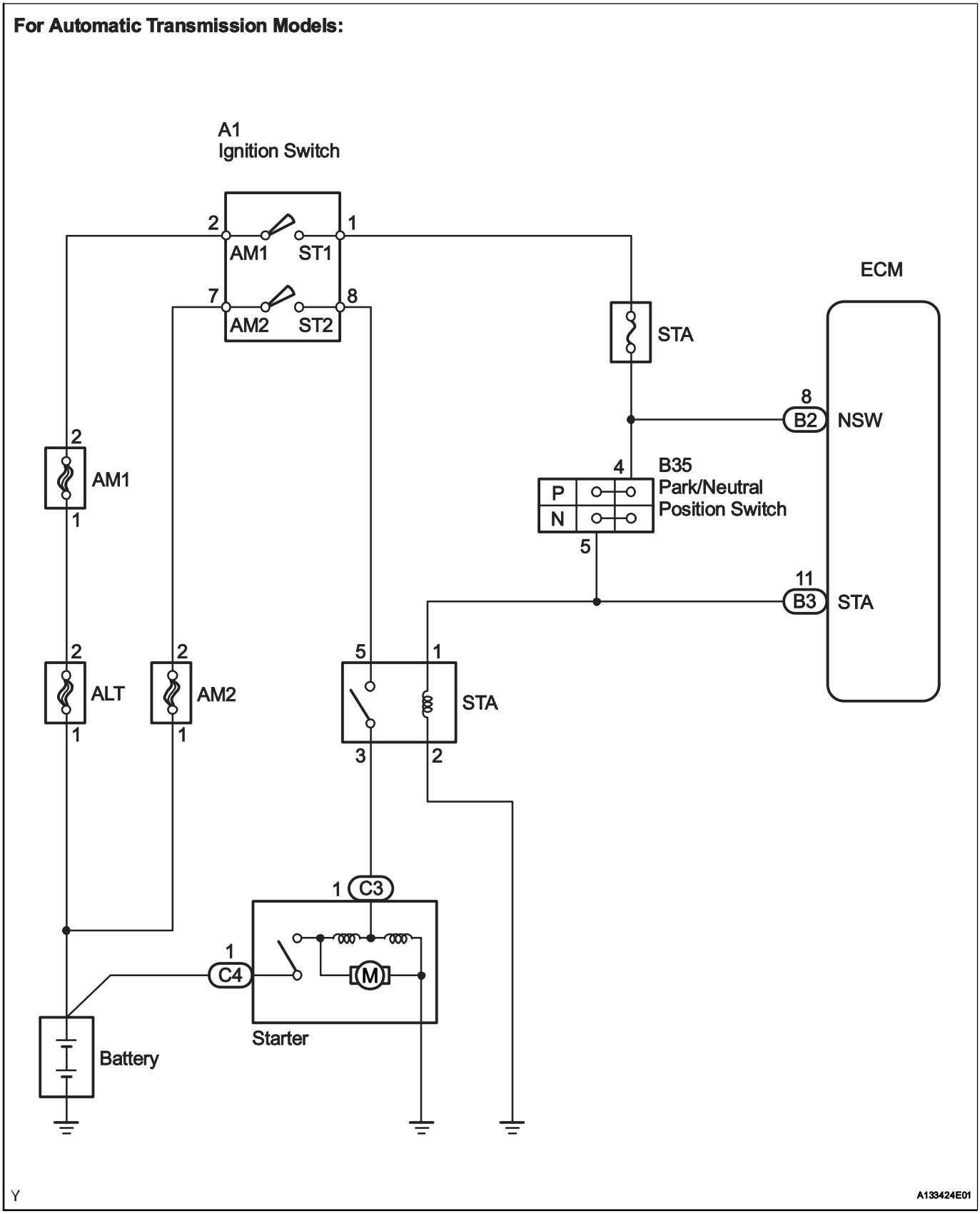

INSPECTION PROCEDURE

HINT:

- The following troubleshooting flowchart is based on the premise that the engine is cranked normally. If the engine will not crank, proceed to the problem symptoms table (See page ES-28).

- Read freeze frame data using an intelligent tester. Freeze frame data record the engine condition when malfunctions are detected. When troubleshooting, freeze frame data can help determine if the vehicle was moving or stationary, if the engine was warmed up or not, if the air-fuel ratio was lean or rich, and other data, from the time the malfunction occurred.

1 READ VALUE USING INTELLIGENT TESTER (STARTER SIGNAL)

(a) Connect an intelligent tester to the DLC3.
(b) Turn the ignition switch ON and turn the tester ON.
(c) Select the following menu items: DIAGNOSIS / ENHANCED OBD II / DATA LIST / PRIMARY / STARTER SIG.
(d) Check the value displayed on the tester when the ignition switch is turned to ON and START positions.

OK

Ignition Switch Positions	ON	START
STARTER SIG	OFF	ON

OK → **CHECK FOR INTERMITTENT PROBLEMS**

NG

2 INSPECT PARK/NEUTRAL POSITION SWITCH OR CLUTCH START SWITCH

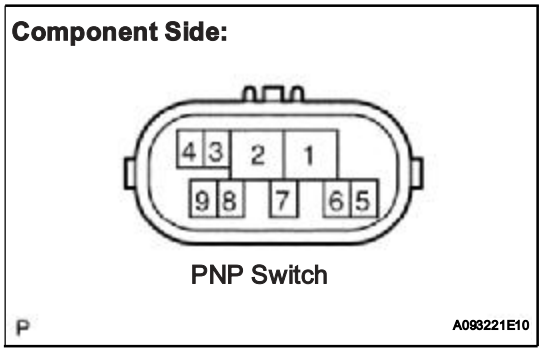

(a) Inspect the Park/Neutral Position (PNP) switch (For Automatic Transmission models).
(1) Disconnect the B35 PNP switch connector.
(2) Check the resistance when the transmission gear selector lever is moved to each position.
Standard Resistance

Gear Selector Lever Positions	Tester Connections	Specified Conditions
P	2 - 6, 4 - 5	Below 1 Ω
R	1 - 2	
N	2 - 9, 4 - 5	
D	2 - 7	
2	2 - 3	
L	2 - 8	

(3) Reconnect the PNP switch connector.

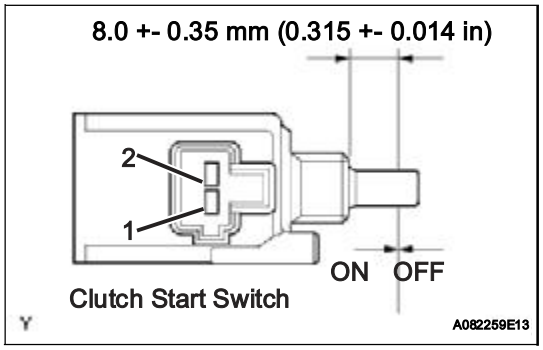

(b) Inspect the clutch start switch (For Manual Transmission models).
(1) Disconnect the A9 clutch start switch connector.
(2) Check the resistance when the clutch start switch is ON and OFF.
Standard Resistance

Switch Positions	Tester Connections	Specified Conditions
ON (pushed)	1 - 2	Below 1 Ω
OFF (free)	1 - 2	10 kΩ or higher

(3) Reconnect the clutch start switch connector.

OK → **Go to step 4**

NG

3	REPLACE PARK / NEUTRAL POSITION SWITCH ASSEMBLY

Replace the park/neutral position switch assembly (See page AT-153).

NEXT

4	READ VALUE USING INTELLIGENT TESTER (STARTER SIGNAL)

ES

(a) Connect an intelligent tester to the DLC3.
(b) Turn the ignition switch ON and turn the tester ON.
(c) Select the following menu items: DIAGNOSIS / ENHANCED OBD II / DATA LIST / PRIMARY / STARTER SIG.
(d) Check the value displayed on the tester when the ignition switch is turned to ON and START positions.

OK

Ignition Switch Positions	ON	START
STARTER SIG	OFF	ON

OK → **SYSTEM OK**

NG

5	INSPECT IGNITION OR STARTER SWITCH ASSEMBLY

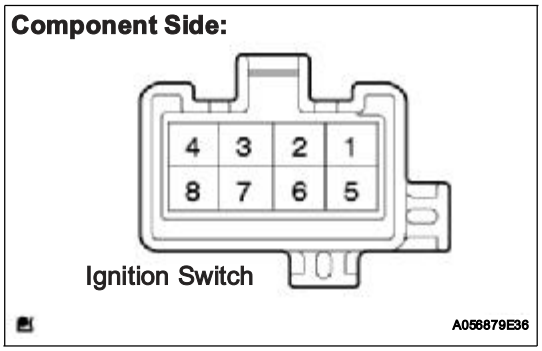

(a) Disconnect the A1 ignition switch connector.
(b) Check the resistance.

Standard Resistance

Ignition Switch Positions	Tester Connections	Specified Conditions
LOCK	All Terminals	10 kΩ or higher
ACC	2 - 3	Below 1 Ω
ON	2 - 3 - 4, 6 - 7	
START	1 - 2 - 4, 6 - 7 - 8	

(c) Reconnect the ignition switch connector.

OK → **Go to step 7**

NG

6	REPLACE IGNITION OR STARTER SWITCH ASSEMBLY

Replace the ignition or starter switch assembly (See page ST-19).

NEXT

7	READ VALUE USING INTELLIGENT TESTER (STARTER SIGNAL)

(a) Connect an intelligent tester to the DLC3.
(b) Turn the ignition switch ON and turn the tester ON.
(c) Select the following menu items: DIAGNOSIS / ENHANCED OBD II / DATA LIST / PRIMARY / STARTER SIG.
(d) Check the value displayed on the tester when the ignition switch is turned to ON and START positions.

OK

Ignition Switch Positions	ON	START
STARTER SIG	OFF	ON

ES

OK → **SYSTEM OK**

NG

REPAIR OR REPLACE HARNESS OR CONNECTOR

DTC	P0630	VIN not Programmed or Mismatch - ECM / PCM

DESCRIPTION

DTC P0630 is set when the Vehicle Identification Number (VIN) is not stored in the Engine Control Module (ECM) or the input VIN is not accurate. Input the VIN with an intelligent tester.

DTC No.	DTC Detection Conditions	Trouble Areas
P0630	• VIN not stored in ECM • Input VIN in ECM not accurate	• ECM

MONITOR STRATEGY

ES

Related DTCs	P0630: VIN not programmed
Required Sensors/Components (Main)	ECM
Required Sensors/Components (Related)	-
Frequency of Operation	Continuous
Duration	0.5 seconds
MIL Operation	Immediate
Sequence of Operation	None

TYPICAL ENABLING CONDITIONS

Battery voltage	8 V or more
Ignition switch	ON
Starter	OFF

TYPICAL MALFUNCTION THRESHOLDS

VIN code	Not programmed

COMPONENT OPERATING RANGE

VIN code	Programmed

INSPECTION PROCEDURE

1	READ CURRENT DTC

(a) Connect an intelligent tester to the DLC3.
(b) Turn the ignition switch ON and turn the tester ON.
(c) Select the following menu items: DIAGNOSIS / ENHANCED OBD II / DTC INFO / CURRENT CODES.
(d) Read DTCs.

Result

Display (DTC Output)	Proceed To
P0630	A
P0630 and other DTCs	B

If any DTCs other than P0630 are output, troubleshoot those DTCs first.

NOTICE:
If P0630 is set, the VIN must be input to the ECM using an intelligent tester. However, all DTCs are cleared automatically by the tester when inputting the VIN. If DTCs other than P0630 are set, check them first.

B → **GO TO DTC CHART (See page ES-57)**

A

2	INPUT VIN WITH INTELLIGENT TESTER

Refer to REGISTRATION (See page ES-15).

NEXT

END

DTC	P0724	Brake Switch "B" Circuit High

DESCRIPTION

The purpose of this circuit is to prevent the engine from stalling, while driving in lock-up condition, when brakes are suddenly applied.
When the brake pedal is depressed, this switch sends a signals to the ECM. Then the ECM cancels the operation of the lock-up clutch while braking is in progress.

DTC No.	DTC Detection Conditions	Trouble Areas
P0724	The stop light switch remains ON even when the vehicle repeats 5 cycles of STOP (less than 1.86 mph (3 km/h)) and GO (18.65 mph (30 km/h) or more) (2 trip detection logic)	• Short in stop light switch signal circuit • Stop light switch • ECM

ES

MONITOR DESCRIPTION

This DTC indicates that the stop light switch remains ON. When the stop light switch remains ON during "stop and go" driving, the ECM interprets this as a fault in the stop light switch and the MIL comes on and the ECM stores the DTC. The vehicle must stop (less than 1.86 mph (3 km/h)) and go (18.65 mph (30 km/h) or more) 5 times during 2 driving cycles, in order to detect a malfunction.

MONITOR STRATEGY

Related DTCs	P0724: Stop light switch/Range check/Rationality
Required sensors/Components (Main)	Stop light switch
Required sensors/Components (Related)	Speed sensor
Frequency of Operation	Continuous
Duration	5 times
MIL Operation	2 driving cycles
Sequence of Operation	None

TYPICAL ENABLING CONDITIONS

The stop light switch remains ON during GO and STOP 5 times.
GO and STOP are defined as follows;

Monitor will run whenever following DTCs not present	None
GO: Vehicle speed	18.65 mph (30 km/h) or more
STOP: Vehicle speed	Less than 1.86 mph (3 km/h)

TYPICAL MALFUNCTION THRESHOLDS

Stop light switch status	Stuck ON

WIRING DIAGRAM

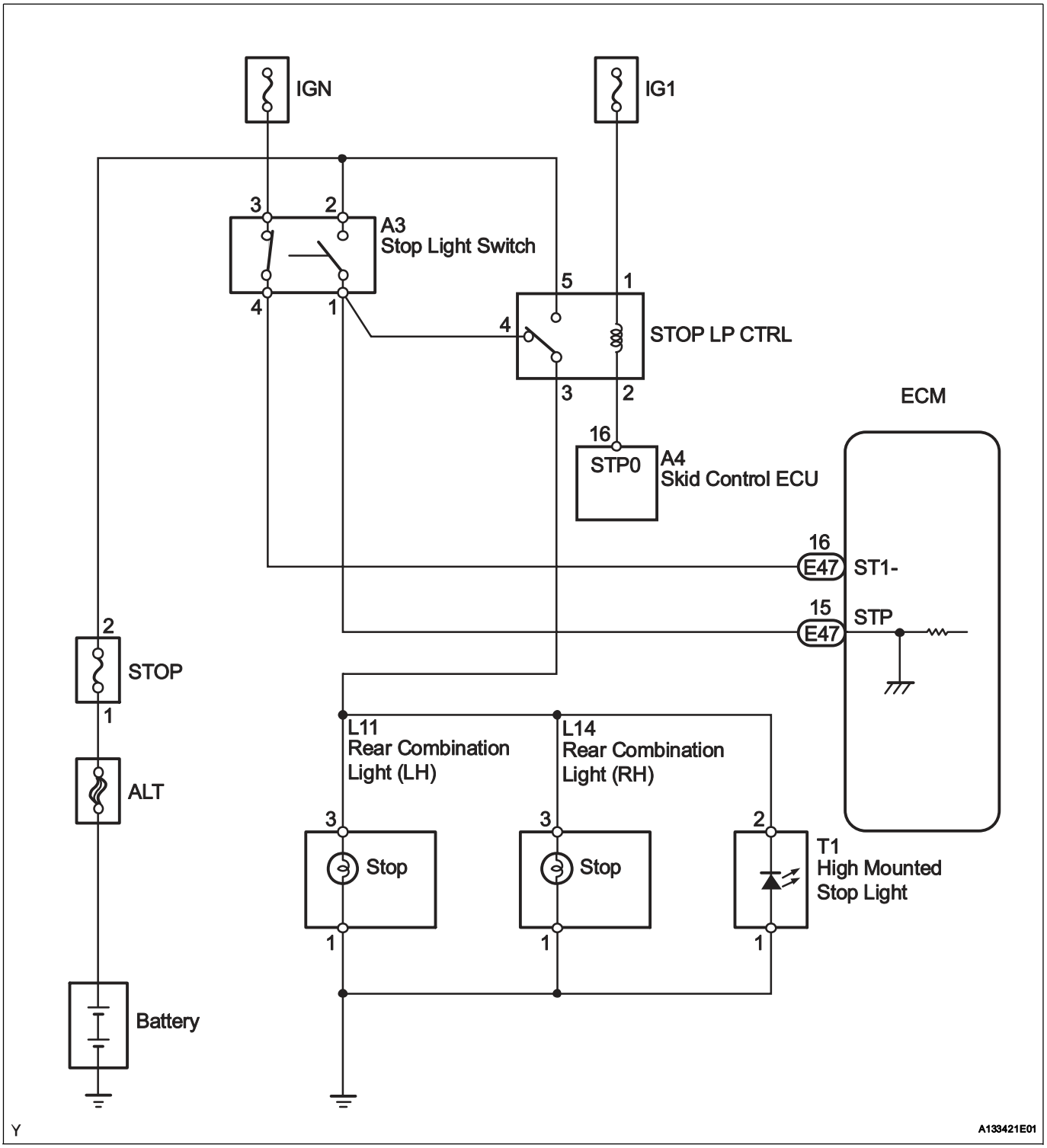

INSPECTION PROCEDURE

HINT:

Read freeze frame data using an intelligent tester. Freeze frame data record the engine condition when malfunctions are detected. When troubleshooting, freeze frame data can help determine if the vehicle was moving or stationary, if the engine was warmed up or not, if the air-fuel ratio was lean or rich, and other data, from the time the malfunction occurred.

1 READ VALUE USING INTELLIGENT TESTER (STOP LIGHT SW)

(a) Connect an intelligent tester to the DLC3.
(b) Turn the ignition switch ON and turn the tester ON.
(c) Select the following menu items: DIAGNOSIS / ENHANCED OBD II / DATA LIST / PRIMARY / STOP LIGHT SW.
(d) Read the values displayed on the tester.

OK

Item	Measurement Item: Range (display)	Normal Condition
STOP LIGHT SW	Stop light switch status: ON or OFF	• ON: Brake pedal is depressed • OFF: Brake pedal is released

ES

OK → **CHECK FOR INTERMITTENT PROBLEMS**

NG

2 INSPECT STOP LIGHT SWITCH ASSEMBLY (See page ES-254)

NG → **REPLACE STOP LIGHT SWITCH ASSEMBLY (See page LI-111)**

OK

3 CHECK HARNESS AND CONNECTOR (STOP LIGHT SWITCH - ECM) (See page ES-255)

NG → **REPAIR OR REPLACE HARNESS OR CONNECTOR**

OK

REPLACE ECM (See page ES-446)

DTC	P1500	AC Inverter Malfunction

DESCRIPTION

This vehicle is equipped with a voltage inverter, which supplies power to various electrical appliances. When the main switch of the voltage inverter is turned ON, the inverter relay turns ON, and the inverter then converts the 12 V Direct Current (DC) of the battery into an 115 V Alternating Current (AC). The voltage inverter can output a maximum of 400 W from an outlet.
When the AC 115 V is output, a load is applied to the engine. The ECM controls the engine idling speed according to the vehicle speed and engine load. A speed signal is input to the inverter and an idle-up signal is transmitted to the ECM.

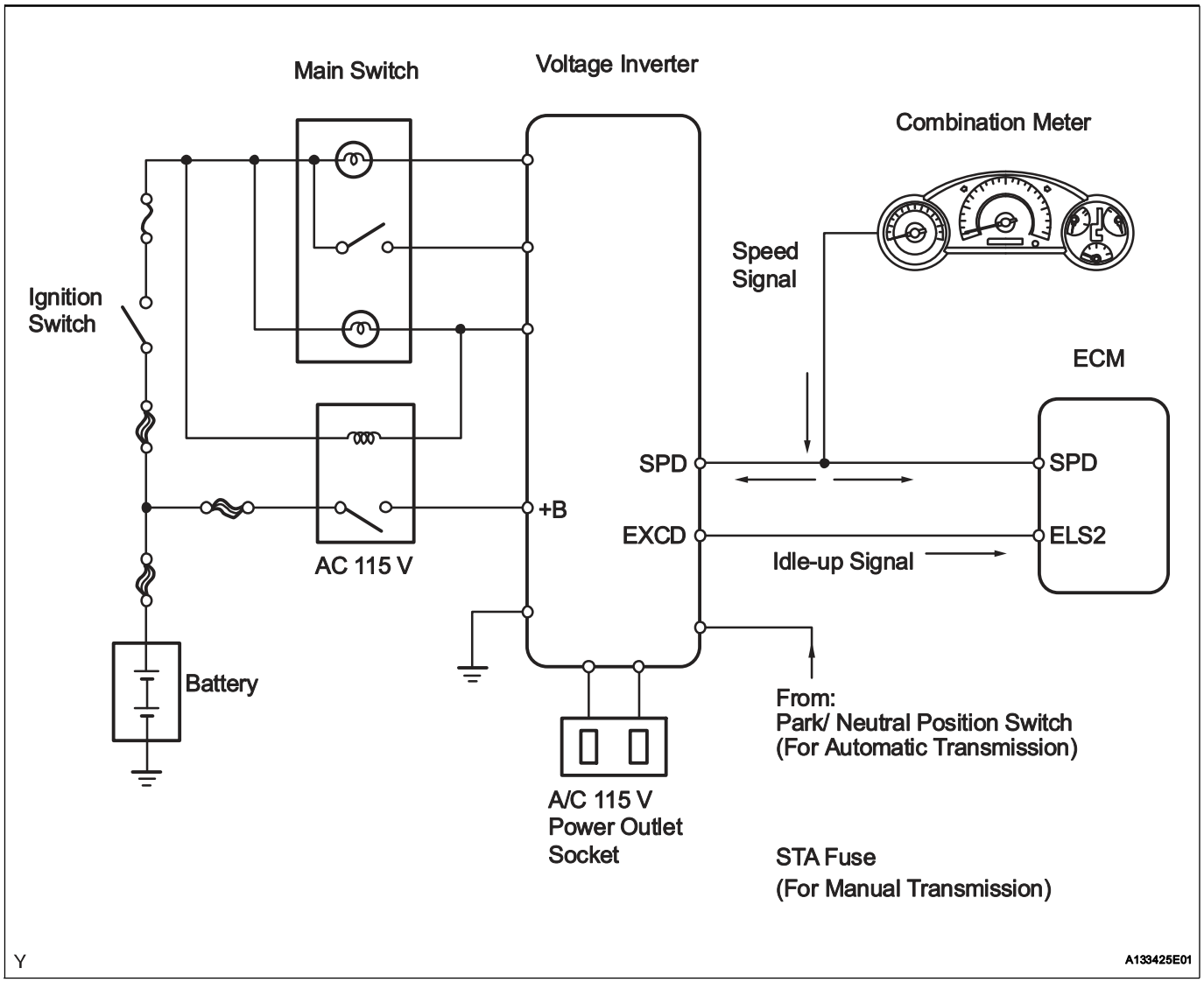

DTC No.	DTC Detection Conditions	Trouble Areas
P1500	While vehicle running, idle-up signal input to ECM for 10 seconds (2 trip detection logic)	• Open or short in speed signal circuit • Short between idle-up signal and +B circuits • Voltage inverter • ECM

MONITOR DESCRIPTION

While the engine is idling, the ECM performs idle-up according to the power supply of the inverter to stabilize the engine idling speed.

When the vehicle is stationary and the inverter input exceeds 8.3 A, the inverter sends an idle-up signal from the EXCD terminal of the inverter to the ELS2 terminal of the ECM.
If the idle-up signal is input into the ECM for 10 seconds while the vehicle is running, the ECM interprets this as a malfunction in the inverter circuit and sets the DTC.

MONITOR STRATEGY

Related DTCs	P1500: Voltage inverter performance
Required Sensors/Components (Main)	Voltage inverter
Required Sensors/Components (Related)	-
Frequency of Operation	Continuous
Duration	10 seconds
MIL Operation	2 driving cycles
Sequence of Operation	None

ES

TYPICAL ENABLING CONDITIONS

Monitor runs whenever following DTCs not present	None
Vehicle speed	3.11 mph (5 km/h) or more
Battery voltage	8 V or more
Ignition switch	ON
Starter	OFF

TYPICAL MALFUNCTION THRESHOLDS

Electric load signal 2	ON

WIRING DIAGRAM

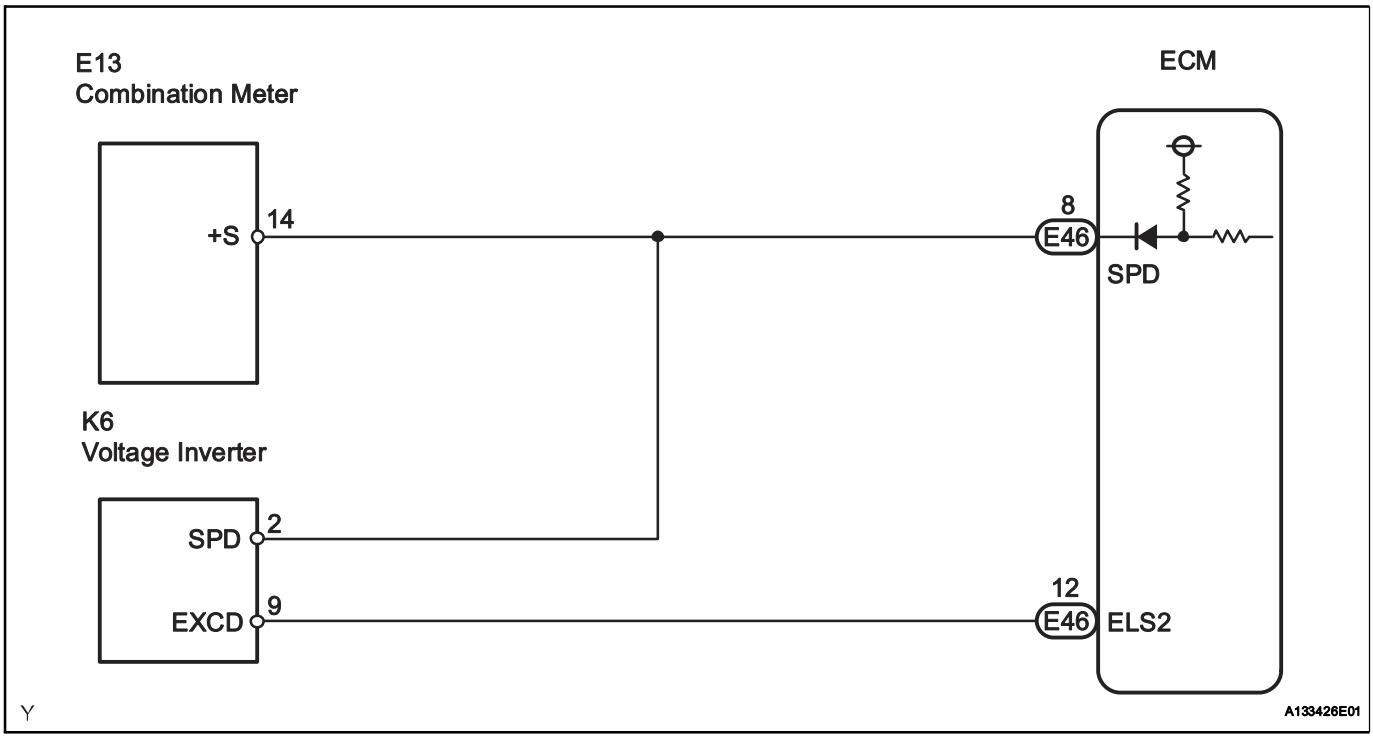

INSPECTION PROCEDURE

1	CHECK ANY OTHER DTCS OUTPUT (IN ADDITION TO DTC P1500)

(a) Connect an intelligent tester to the DLC3.
(b) Turn the ignition switch ON and turn the tester ON.
(c) Select the following menu items: DIAGNOSIS / ENHANCED OBD II / DTC INFO / CURRENT CODES.
(d) Read DTCs.

Result

Display (DTC Output)	Proceed To
P1500	A
P1500 and other DTCs	B

HINT:
If any DTCs other than P1500 are output, troubleshoot those DTCs first.

NG → GO TO DTC CHART (See page ES-57)

OK

2	INSPECT VOLTAGE INVERTER ASSEMBLY (SPD SIGNAL)

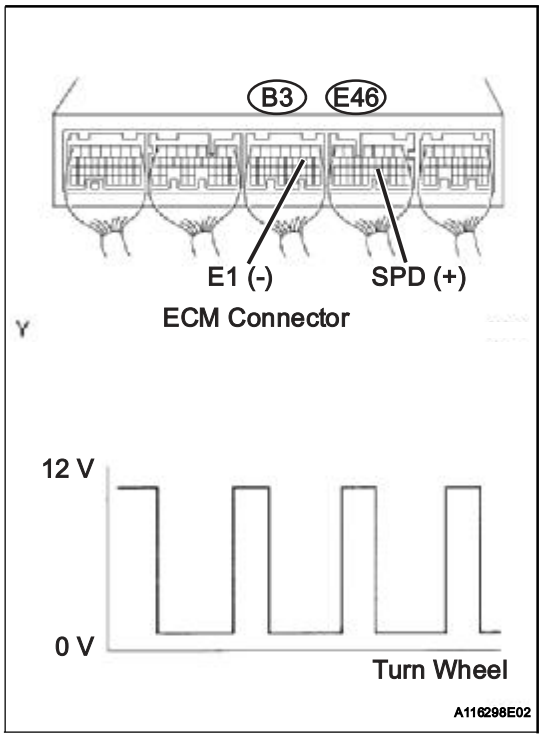

(a) Shift the transmission gear selector lever to the neutral position.
(b) Jack up the vehicle.
(c) Turn the ignition switch ON.
(d) Check the voltage between the terminals of the ECM connectors as the wheel is turned slowly.

Standard Voltage

Tester Connections	Specified Conditions
SPD (E46-8) - E1 (B3-1)	Voltage generated intermittently

HINT:
The output voltage should fluctuate up and down similarly to the diagram on the left when the wheel is turned slowly.

NG → REPAIR OR REPLACE HARNESS OR CONNECTOR

OK

3 INSPECT ECM

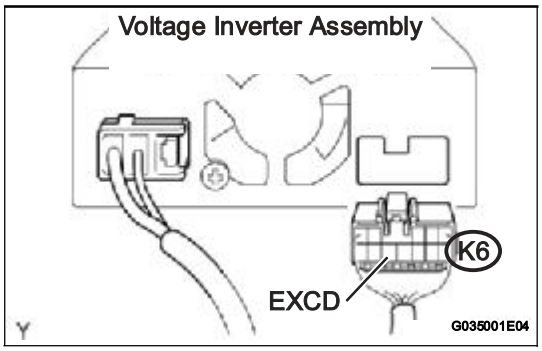

(a) Disconnect the K6 inverter connector.
(b) Start the engine.
(c) Measure the voltage between the OUT terminal of inverter and the body ground.
Standard Voltage

Tester Connections	Specified Conditions
EXCD (K6-9) - Body ground	1 V or less

(d) Reconnect the inverter connector.

OK → **REPLACE VOLTAGE INVERTER ASSEMBLY (See page OT-17)**

NG

4 CHECK HARNESS AND CONNECTOR (ECM - INVERTER, INVERTER - POWER SOURCE)

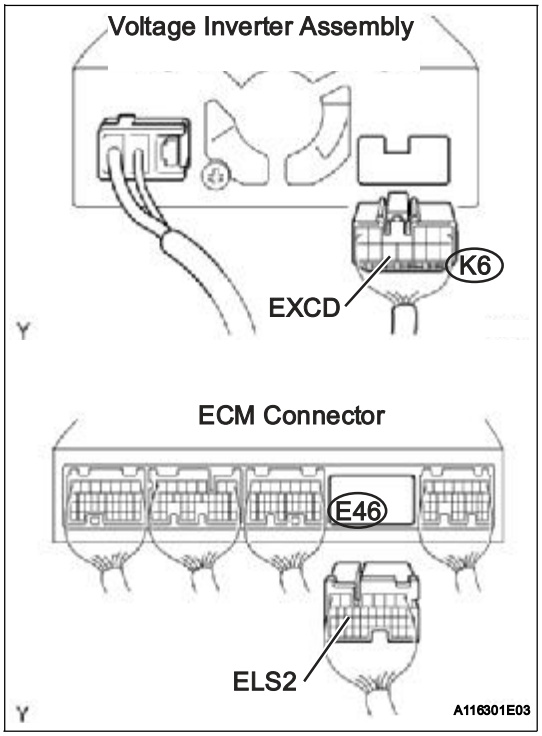

(a) Disconnect the K6 inverter connector.
(b) Disconnect the E46 ECM connector.
(c) Turn the ignition switch ON.
(d) Measure the voltage between the terminals of the wire harness side connectors and body ground.
Standard Voltage (Check for short in idling up signal circuit)

Tester Connections	Specified Conditions
EXCD (K6-9) - Body ground	1 V or less
ELS2 (E46-12) - Body ground	

(e) Reconnect the inverter connector and the ECM connector.

NG → **REPAIR OR REPLACE HARNESS OR CONNECTOR**

OK

REPLACE ECM (See page ES-446)

DTC	P2102	Throttle Actuator Control Motor Circuit Low

DTC	P2103	Throttle Actuator Control Motor Circuit High

DESCRIPTION

The throttle actuator is operated by the ECM and opens and closes the throttle valve using gears.
The opening angle of the throttle valve is detected by the Throttle Position (TP) sensor, which is mounted on the throttle body. The TP sensor provides feedback to the ECM. This feedback allows the ECM to appropriately control the throttle actuator and monitor the throttle opening angle as the ECM responds to driver inputs.
HINT:
This ETCS (Electronic Throttle Control System) does not use a throttle cable.

ES

DTC No.	DTC Detection Conditions	Trouble Areas
P2102	Conditions (a) and (b) continue for 2.0 seconds (1 trip detection logic) (a) Throttle actuator duty ratio 80 % or more (b) Throttle actuator current 0.5 A or less	• Open in throttle actuator circuit • Throttle actuator • ECM
P2103	Throttle actuator current 7 A or more for 0.6 seconds (1 trip detection logic)	• Short in throttle actuator circuit • Throttle actuator • Throttle valve • Throttle body assembly • ECM

MONITOR DESCRIPTION

The ECM monitors the electrical current through the electronic actuator, and detects malfunctions and open circuits in the throttle actuator based on this value. If the current is outside the standard range, the ECM determines that there is a malfunction in the throttle actuator. In addition, if the throttle valve does not function properly (for example, stuck on), the ECM determines that there is a malfunction. The ECM then illuminates the MIL and sets a DTC.
Example:
When the electrical current is more than 7 A, or less than 0.5 A and the throttle actuator duty ratio exceeds 80 %, the ECM interprets this as the current being outside the standard range, and illuminates the MIL and sets a DTC.
If the malfunction is not repaired successfully, a DTC is set when the engine is quickly revved to a high rpm several times after the engine has idled for 5 seconds after engine start.

MONITOR STRATEGY

Related DTCs	P2102: Throttle actuator current (low current) P2103: Throttle actuator current (high current)
Required Sensors/Components (Main)	Throttle actuator (throttle body)
Required Sensors/Components (Related)	None
Frequency of Operation	Continuous
Duration	P2102: 2 seconds P2103: 0.6 seconds
MIL Operation	Immediate
Sequence of Operation	None

TYPICAL ENABLING CONDITIONS

Monitor runs whenever following DTCs not present	None

P2102:

Electronic throttle actuator	ON

Electronic throttle actuator drive duty	80 % or more
Electronic throttle actuator power supply voltage	8 V or more
Motor current change during latest 0.016 seconds	Less than 0.2 A

P2103:

Electronic throttle actuator	ON
Either of the following conditions 1 or 2 met:	-
1. Electronic throttle actuator power supply voltage	8 V or more
2. Electronic throttle actuator power	ON
Battery voltage	8 V or more
Starter	OFF

TYPICAL MALFUNCTION THRESHOLDS

P2102:

Motor current	Less than 0.5 A

P2103:

Hybrid IC diagnosis signal	Fail
Hybrid IC current limiter port	Fail

FAIL-SAFE

When either of these DTCs, as well as other DTCs relating to ETCS (Electronic Throttle Control System) malfunctions, is set, the ECM enters fail-safe mode. During fail-safe mode, the ECM cuts the current to the throttle actuator off, and the throttle valve is returned to a 6° throttle angle by the return spring. The ECM then adjusts the engine output by controlling the fuel injection (intermittent fuel-cut) and ignition timing, in accordance with the accelerator pedal opening angle, to allow the vehicle to continue at a minimal speed. If the accelerator pedal is depressed firmly and gently, the vehicle can be driven slowly. Fail-safe mode continues until a pass condition is detected, and the ignition switch is then turned OFF.

WIRING DIAGRAM

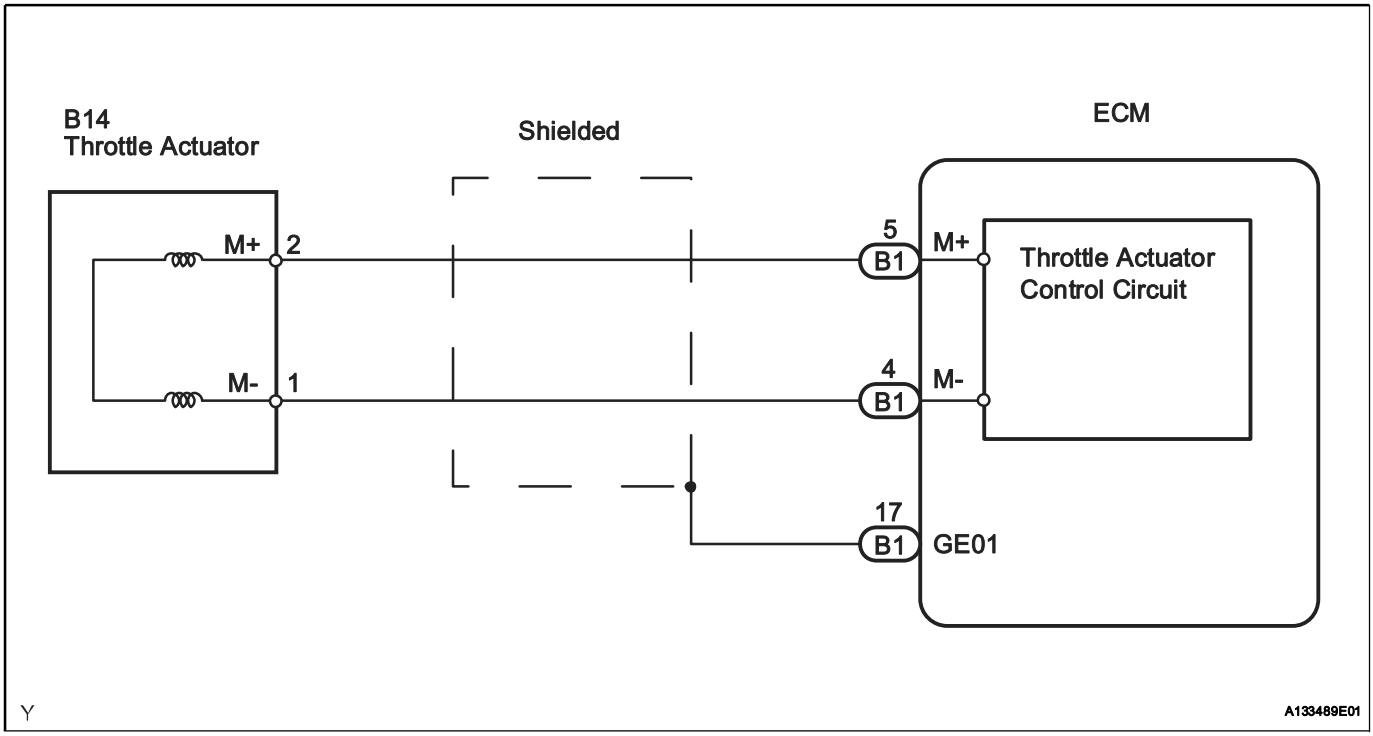

INSPECTION PROCEDURE

HINT:

- Read freeze frame data using an intelligent tester. Freeze frame data record the engine condition when malfunctions are detected. When troubleshooting, freeze frame data can help determine if the vehicle was moving or stationary, if the engine was warmed up or not, if the air-fuel ratio was lean or rich, and other data, from the time the malfunction occurred.
- The throttle actuator current (THROTTLE MOT) and the throttle actuator duty ratio (THROTTLE OPN / THROTTLE CLS) can be read using an intelligent tester. However the ECM shuts off the throttle actuator current when the ETCS malfunctions.

1 INSPECT THROTTLE WITH MOTOR BODY ASSEMBLY (RESISTANCE OF THROTTLE CONTROL MOTOR)

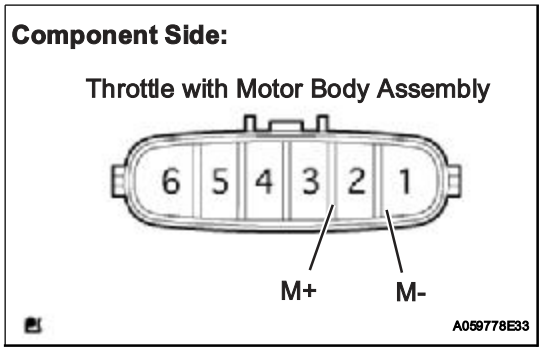

(a) Disconnect the B14 throttle with motor body connector.
(b) Measure the resistance between the terminals of the throttle control motor.

Standard Resistance

Tester Connections	Specified Conditions
M+ (2) - M- (1)	0.3 to 100 Ω at 20°C (68°F)

(c) Reconnect the throttle with motor body connector.

NG → **REPLACE THROTTLE WITH MOTOR BODY ASSEMBLY (See page ES-428)**

OK

2 CHECK HARNESS AND CONNECTOR (THROTTLE CONTROL MOTOR - ECM)

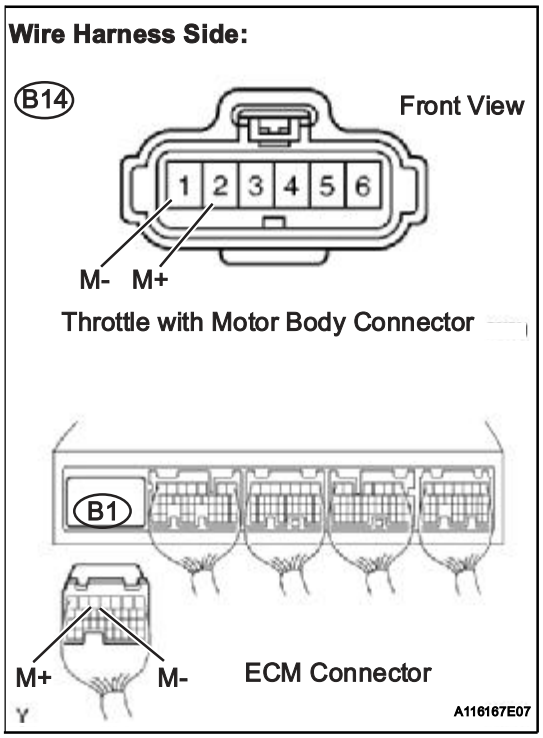

(a) Disconnect the B14 throttle with motor body connector.
(b) Disconnect the B1 ECM connector.
(c) Check the resistance.

Standard Resistance (Check for open)

Tester Connections	Specified Conditions
M+ (B14-2) - M+ (B1-5)	Below 1 Ω
M- (B14-1) - M- (B1-4)	

Standard Resistance (Check for short)

Tester Connections	Specified Conditions
M+ (B14-2) or M+ (B1-5) - Body ground	10 kΩ or higher
M- (B14-1) or M- (B1-4) - Body ground	

(d) Reconnect the throttle with motor body connector.
(e) Reconnect the ECM connector.

NG → **REPAIR OR REPLACE HARNESS OR CONNECTOR**

OK

3	INSPECT THROTTLE WITH MOTOR BODY ASSEMBLY

(a) Check for foreign objects between the throttle valve and the housing.
OK:
No foreign objects between throttle valve and housing.

NG → **REMOVE FOREIGN OBJECT AND CLEAN THROTTLE BODY**

OK

ES

4	INSPECT THROTTLE VALVE

(a) Check if the throttle valve opens and closes smoothly.
OK:
Throttle valve opens and closes smoothly.

NG → **REPLACE THROTTLE WITH MOTOR BODY ASSEMBLY (See page ES-428)**

OK

REPLACE ECM (See page ES-446)

DTC	P2111	Throttle Actuator Control System - Stuck Open

DTC	P2112	Throttle Actuator Control System - Stuck Closed

DESCRIPTION

The throttle actuator is operated by the ECM, and opens and closes the throttle valve using gears. The opening angle of the throttle valve is detected by the Throttle Position (TP) sensor, which is mounted on the throttle body. The TP sensor provides feedback to the ECM in order that it can control the throttle actuator, and therefore the throttle valve, appropriately in response to driver inputs.
HINT:
This ETCS (Electronic Throttle Control System) does not use a throttle cable.

ES

DTC No.	DTC Detection Conditions	Trouble Areas
P2111	ECM signals throttle actuator to close, but stuck (1 trip detection logic)	• Throttle actuator • Throttle body assembly • Throttle valve
P2112	ECM signals throttle actuator to open, but stuck (1 trip detection logic)	

MONITOR DESCRIPTION

The ECM determines that there is a malfunction in the ETCS when the throttle valve remains at a fixed angle despite a high drive current from the ECM. The ECM illuminates the MIL and sets a DTC.
If the malfunction is not repaired successfully, a DTC is set when the accelerator pedal is fully depressed and released quickly (to fully open and close the throttle valve) after the engine is next started.

MONITOR STRATEGY

Related DTCs	P2111: Throttle actuator stuck open P2112: Throttle actuator stuck closed
Required Sensors/Components (Main)	Throttle actuator
Required Sensors/Components (Related)	-
Frequency of Operation	Continuous
Duration	0.5 seconds
MIL Operation	Immediate
Sequence of Operation	None

TYPICAL ENABLING CONDITIONS

ALL:

Monitor runs whenever following DTCs not present	None

P2111 (Throttle actuator stuck open):

All of following conditions met	-
System guard*	ON
Throttle motor current	2 A or more
Throttle motor close duty	80 % or more

P2112 (Throttle actuator stuck closed):

All of following conditions met	-
System guard*	ON
Throttle motor current	2 A or more
Throttle motor open duty	80 % or more
* System guard set when following conditions met	-

Throttle motor	ON
Motor duty calculation	Executing
TPS fail determination	Fail determined
Motor current-cut operation	Not executing
Actuator power supply voltage	4 V or more
Motor fail determination	Fail determined

TYPICAL MALFUNCTION THRESHOLDS

P2111 (Throttle actuator stuck open):

TP sensor voltage change for 0.016 seconds	Less than 0.1 V for 0.5 seconds or more

P2112 (Throttle actuator stuck closed):

ES

TP sensor voltage change for 0.016 seconds	Less than 0.1 V for 0.5 seconds or more

FAIL-SAFE

When either of these DTCs, as well as other DTCs relating to ETCS (Electronic Throttle Control System) malfunctions, is set, the ECM enters fail-safe mode. During fail-safe mode, the ECM cuts the current to the throttle actuator off, and the throttle valve is returned to a 6° throttle angle by the return spring. The ECM then adjusts the engine output by controlling the fuel injection (intermittent fuel-cut) and ignition timing, in accordance with the accelerator pedal opening angle, to allow the vehicle to continue at a minimal speed.
If the accelerator pedal is depressed firmly and gently, the vehicle can be driven slowly.
Fail-safe mode continues until a pass condition is detected, and the ignition switch is then turned OFF.

WIRING DIAGRAM

Refer to DTC P2102 (See page ES-283).

INSPECTION PROCEDURE

HINT:
Read freeze frame data using an intelligent tester. Freeze frame data record the engine condition when malfunctions are detected. When troubleshooting, freeze frame data can help determine if the vehicle was moving or stationary, if the engine was warmed up or not, if the air-fuel ratio was lean or rich, and other data, from the time the malfunction occurred.

1	CHECK ANY OTHER DTCS OUTPUT (IN ADDITION TO DTC P2111 OR P2112)

(a) Connect an intelligent tester to the DLC3.
(b) Turn the ignition switch ON.
(c) Turn the tester ON.
(d) Select the following menu items: DIAGNOSIS / ENHANCED OBD II / DTC INFO / CURRENT CODES.
(e) Read DTCs.

Result

Display (DTC Output)	Proceed To
P2111 or P2112	A
P2111 or P2112 and other DTCs	B

HINT:
If any DTCs other than P2111 or P2112 are output, troubleshoot those DTCs first.

B → GO TO DTC CHART (See page ES-57)

A

2	INSPECT THROTTLE WITH MOTOR BODY ASSEMBLY (VISUALLY CHECK THROTTLE VALVE)

(a) Check for contamination between the throttle valve and the housing. If necessary, clean the throttle body. And check that the throttle valve moves smoothly.
OK:
Throttle valve is not contaminated with foreign objects and moves smoothly.

NG → REPLACE THROTTLE WITH MOTOR BODY ASSEMBLY (See page ES-428)

OK

3	CHECK WHETHER DTC OUTPUT RECURS (DTC P2111 OR P2112)

(a) Connect an intelligent tester to the DLC3.
(b) Turn the ignition switch ON.
(c) Turn the tester ON.
(d) Clear DTCs (See page ES-38).
(e) Start the engine, and fully depress and release the accelerator pedal quickly (to fully open and close the throttle valve).
(f) Select the following menu items: DIAGNOSIS / ENHANCED OBD II / DTC INFO / CURRENT CODES.
(g) Read DTCs.

Result

Display (DTC Output)	Proceed To
No DTC	A
P2111 or P2112	B

B → REPLACE THROTTLE WITH MOTOR BODY ASSEMBLY (See page ES-428)

A

CHECK FOR INTERMITTENT PROBLEMS

DTC	P2118	Throttle Actuator Control Motor Current Range / Performance

DESCRIPTION

The ETCS (Electronic Throttle Control System) has a dedicated power supply circuit. The voltage (+BM) is monitored and when it is low (less than 4 V), the ECM determines that there is a malfunction in the ETCS and cuts off the current to the throttle actuator.
When the voltage becomes unstable, the ETCS itself becomes unstable. For this reason, when the voltage is low, the current to the throttle actuator is cut. If repairs are made and the system returns to normal, turn the ignition switch OFF. The ECM then allows the current to flow to the throttle actuator so that it can be restarted.

ES

HINT:
The ETCS does not use a throttle cable.

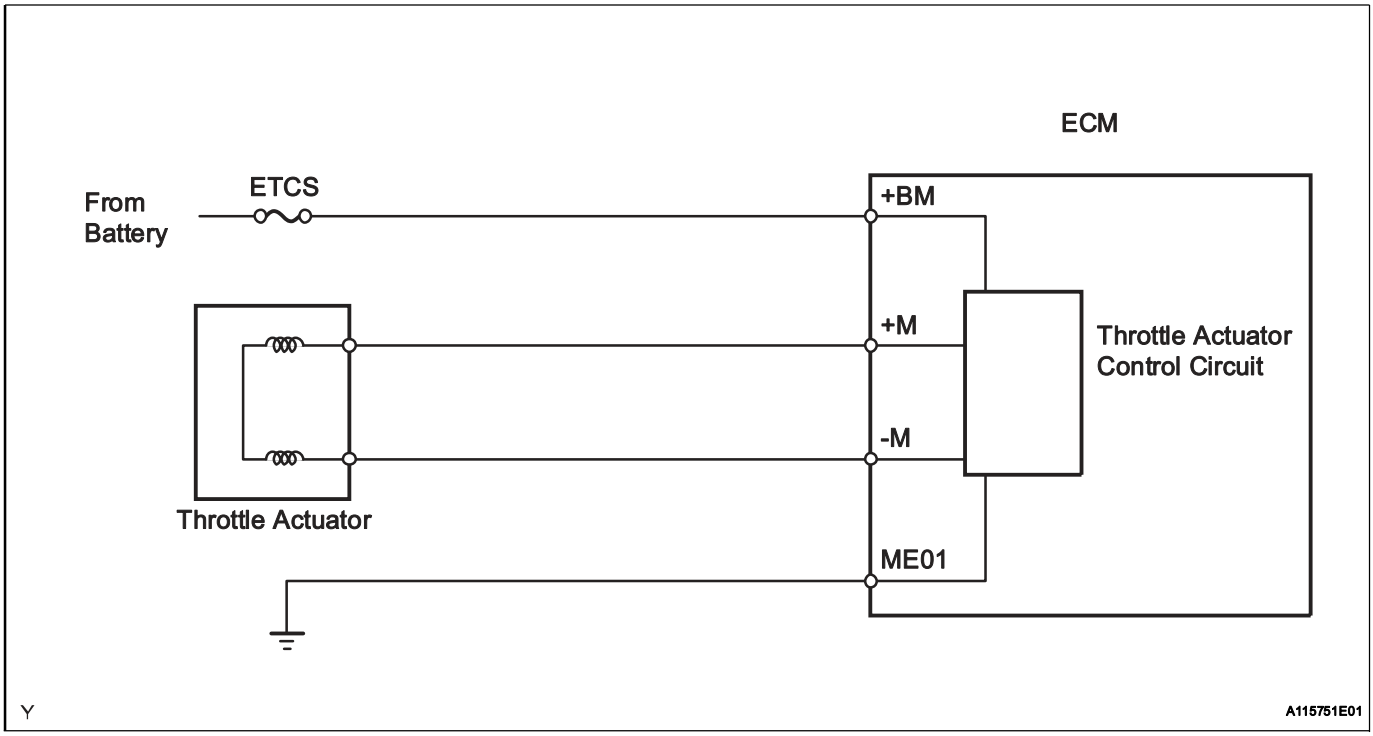

DTC No.	DTC Detection Conditions	Trouble Areas
P2118	Open in ETCS power source (+BM) circuit (1 trip detection logic)	• Open in ETCS power source circuit • ETCS fuse • ECM

MONITOR DESCRIPTION

The ECM monitors the battery supply voltage applied to the throttle actuator.
When the power supply voltage (+BM) drops to below 4 V for 0.8 seconds or more, the ECM interprets this as an open in the power supply circuit (+BM). The ECM illuminates the MIL and sets the DTC.
If the malfunction is not repaired successfully, the DTC is set 5 seconds after the engine is next started.

MONITOR STRATEGY

Related DTCs	P2118: Throttle actuator power supply
Required Sensors/Components (Main)	Throttle actuator, throttle valve, ETCS fuse
Required Sensors/Components (Related)	None
Frequency of Operation	Continuous
Duration	0.8 seconds

MIL Operation	Immediate
Sequence of Operation	None

TYPICAL ENABLING CONDITIONS

Monitor runs whenever following DTCs not present	None
Electronic throttle actuator power	ON
Battery voltage	8 V or more

TYPICAL MALFUNCTION THRESHOLDS

Electronic throttle actuator power supply voltage (+BM)	Less than 4 V

COMPONENT OPERATING RANGE

Throttle actuator power supply voltage	11 to 14 V

FAIL-SAFE

When this DTC, as well as other DTCs relating to ETCS (Electronic Throttle Control System) malfunctions, is set, the ECM enters fail-safe mode. During fail-safe mode, the ECM cuts the current to the throttle actuator off, and the throttle valve is returned to a 6° throttle angle by the return spring. The ECM then adjusts the engine output by controlling the fuel injection (intermittent fuel-cut) and ignition timing, in accordance with the accelerator pedal opening angle, to allow the vehicle to continue at a minimal speed. If the accelerator pedal is depressed firmly and gently, the vehicle can be driven slowly. Fail-safe mode continues until a pass condition is detected, and the ignition switch is then turned OFF.

WIRING DIAGRAM

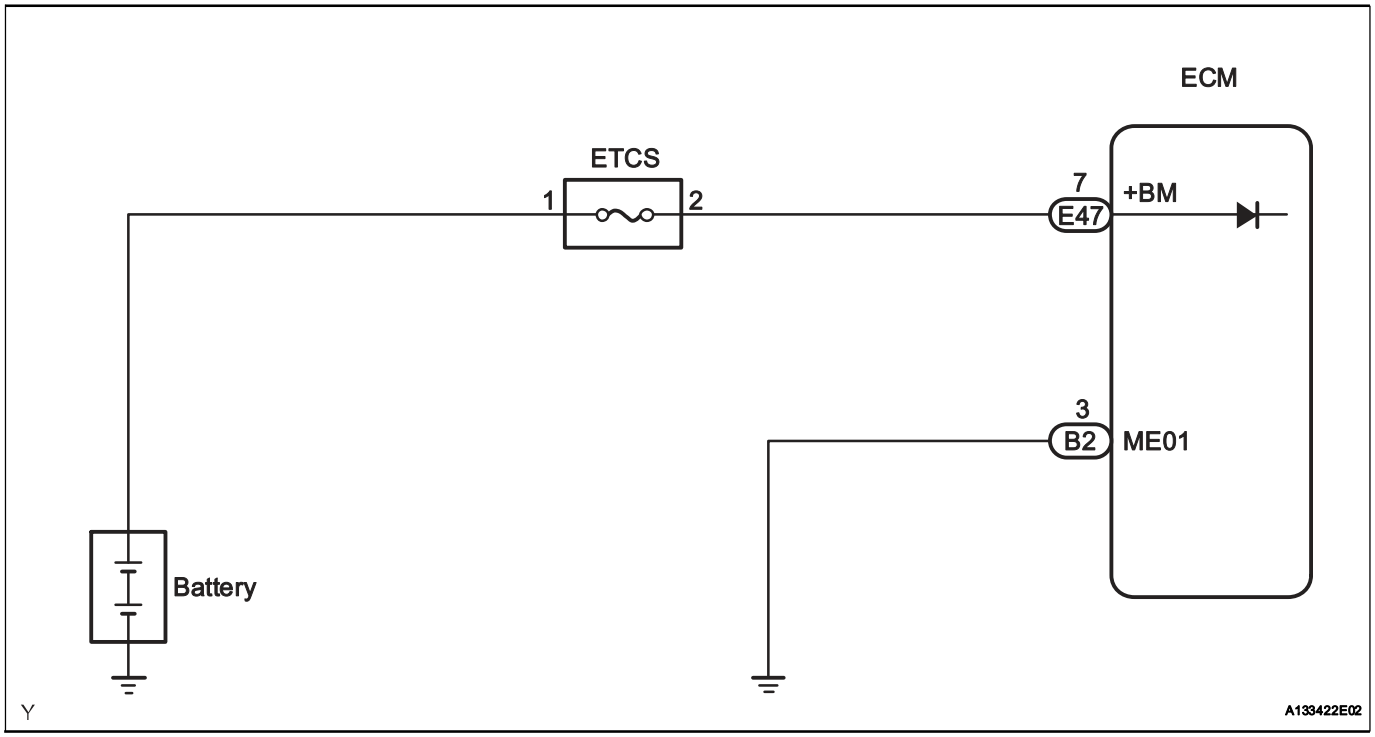

INSPECTION PROCEDURE

HINT:
Read freeze frame data using an intelligent tester. Freeze frame data record the engine condition when malfunctions are detected. When troubleshooting, freeze frame data can help determine if the vehicle was moving or stationary, if the engine was warmed up or not, if the air-fuel ratio was lean or rich, and other data, from the time the malfunction occurred.

ES

1 CHECK FUSE (ETCS FUSE)

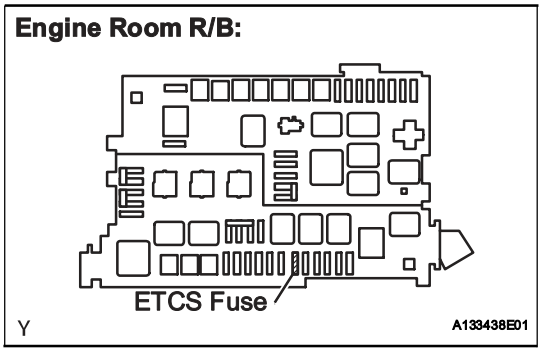

(a) Remove the ETCS fuse from the engine room R/B.
(b) Check the ETCS fuse resistance.
Standard resistance:
Below 1 Ω
(c) Reinstall the ETCS fuse.

NG → **CHECK FOR SHORT IN ALL HARNESSES AND CONNECTORS CONNECTED TO FUSE AND REPLACE FUSE**

OK

2 INSPECT ECM (+BM VOLTAGE)

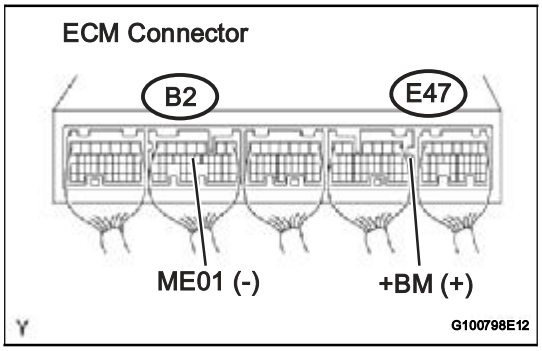

(a) Measure the voltage between the terminals of the B2 and E47 ECM connectors.
Standard Voltage

Tester Connections	Specified Conditions
+BM (E47-7) - ME01 (B2-3)	11 to 14 V

OK → **CHECK FOR INTERMITTENT PROBLEMS**

NG

3	CHECK HARNESS AND CONNECTOR (ECM - ETCS FUSE, ETCS FUSE - BATTERY)

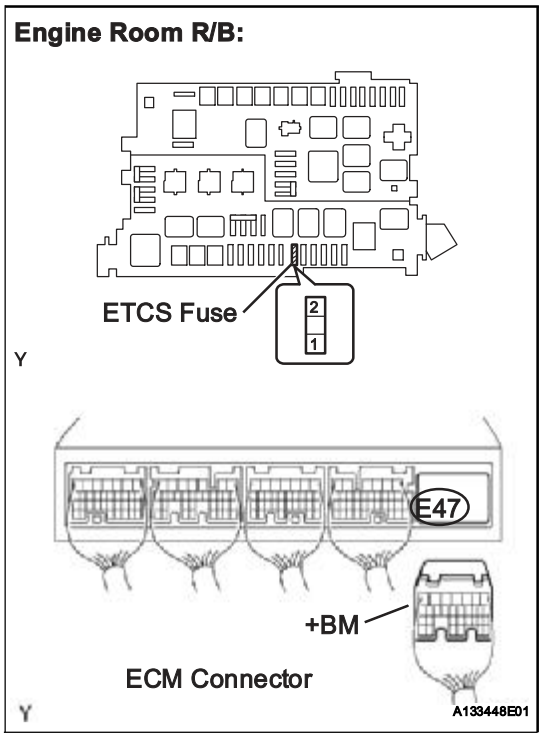

(a) Check the harness and connector between the ETCS fuse and ECM.
  (1) Remove the ETCS fuse from the engine room R/B.
  (2) Disconnect the E47 ECM connector.
  (3) Check the resistance.

Standard Resistance (Check for open)

Tester Connections	Specified Conditions
ETCS fuse (2) - +BM (E47-7)	Below 1 Ω

Standard Resistance (Check for short)

Tester Connections	Specified Conditions
ETCS fuse (2) or +BM (E47-7) - Body ground	10 kΩ or higher

  (4) Reinstall the ETCS fuse.
  (5) Reconnect the ECM connector.

(b) Check the harness and connector between the ETCS fuse and positive battery cable.
  (1) Remove the ETCS fuse from the engine room R/B.
  (2) Disconnect the positive battery cable.
  (3) Check the resistance.

Standard Resistance (Check for open)

Tester Connections	Specified Conditions
Positive battery cable - ETCS fuse (1)	Below 1 Ω

Standard Resistance (Check for short)

Tester Connections	Specified Conditions
Positive battery cable or ETCS fuse (1) - Body ground	10 kΩ or higher

  (4) Reinstall the ETCS fuse.
  (5) Reconnect the positive battery cable.

NG → **REPAIR OR REPLACE HARNESS OR CONNECTOR**

OK

REPLACE ECM (See page ES-446)

ES

DTC	P2119	Throttle Actuator Control Throttle Body Range / Performance

DESCRIPTION

The Electronic Throttle Control System (ETCS) is composed of the throttle actuator, Throttle Position (TP) sensor, Accelerator Pedal Position (APP) sensor, and ECM. The ECM operates the throttle actuator to regulate the throttle valve in response to driver inputs. The TP sensor detects the opening angle of the throttle valve, and provides the ECM with feedback so that the throttle valve can be appropriately controlled by the ECM.

DTC No.	DTC Detection Conditions	Trouble Areas
P2119	Throttle valve opening angle continues to vary greatly from target opening angle (1 trip detection logic)	• ETCS • ECM

ES

MONITOR DESCRIPTION

The ECM determines the actual opening angle of the throttle valve from the TP sensor signal. The actual opening angle is compared to the target opening angle commanded by the ECM. If the difference between these two values is outside the standard range, the ECM interprets this as a malfunction in the ETCS. The ECM then illuminates the MIL and sets the DTC.
If the malfunction is not repaired successfully, the DTC is set when the accelerator pedal is quickly released (to close the throttle valve) after the engine speed reaches 5,000 rpm by the accelerator pedal being fully depressed (fully open the throttle valve).

MONITOR STRATEGY

Related DTCs	P2119: ETCS malfunction
Required Sensors/Components (Main)	Throttle actuator
Required Sensors/Components (Related)	-
Frequency of Operation	Continuous
Duration	1 second
MIL Operation	Immediate
Sequence of Operation	None

TYPICAL ENABLING CONDITIONS

Monitor runs whenever following DTCs not present	None
System guard*	ON
*System guard set when following conditions met	-
Throttle motor	ON
Motor duty calculation	Executing
TPS fail determination	Fail determined
Motor current-cut operation	Not executing
Actuator power supply	4 V or more
Motor fail determination	Fail determined

TYPICAL MALFUNCTION THRESHOLDS

Either of following conditions A or B met	-
A. Commanded closed TP - current closed TP	0.3 V or more for 1 second
B. Commanded open TP - current open TP	0.3 V or more for 0.6 seconds

FAIL-SAFE

When this DTC, as well as other DTCs relating to ETCS (Electronic Throttle Control System) malfunctions, is set, the ECM enters fail-safe mode. During fail-safe mode, the ECM cuts the current to the throttle actuator off, and the throttle valve is returned to a 6° throttle angle by the return spring. The ECM then adjusts the engine output by controlling the fuel injection (intermittent fuel-cut) and ignition timing, in accordance with the accelerator pedal opening angle, to allow the vehicle to continue at a minimal speed. If the accelerator pedal is depressed firmly and gently, the vehicle can be driven slowly. Fail-safe mode continues until a pass condition is detected, and the ignition switch is then turned OFF.

WIRING DIAGRAM

Refer to DTC P2102 (See page ES-283).

INSPECTION PROCEDURE

HINT:
Read freeze frame data using an intelligent tester. Freeze frame data record the engine condition when malfunctions are detected. When troubleshooting, freeze frame data can help determine if the vehicle was moving or stationary, if the engine was warmed up or not, if the air-fuel ratio was lean or rich, and other data, from the time the malfunction occurred.

1	CHECK ANY OTHER DTCS OUTPUT (IN ADDITION TO DTC P2119)

(a) Connect an intelligent tester to the DLC3.
(b) Turn the ignition switch ON.
(c) Turn the tester ON.
(d) Select the following menu items: DIAGNOSIS / ENHANCED OBD II / DTC INFO / CURRENT CODES.
(e) Read DTCs.

Result

Display (DTC Output)	Proceed To
P2119	A
P2119 and other DTCs	B

HINT:
If any DTCs other than P2119 are output, troubleshoot those DTCs first.

B → **GO TO DTC CHART (See page ES-57)**

A

2	CHECK WHETHER DTC OUTPUT RECURS (DTC P2119)

(a) Connect an intelligent tester to the DLC3.
(b) Turn the ignition switch ON.
(c) Turn the tester ON.
(d) Clear DTCs (See page ES-38).
(e) Allow the engine to idle for 15 seconds.

CAUTION:
Exercise extreme care and take precautions at steps (f) and (g) below. Failure to do so may result in the vehicle unexpectedly rolling away.

(f) Securely apply the parking brake and move the gear selector lever to the D position.

(g) While depressing the brake pedal securely, fully depress the accelerator pedal for 5 seconds.
(h) Select the following menu items: DIAGNOSIS / ENHANCED OBD II / DTC INFO / CURRENT CODES.
(i) Read DTCs.
HINT:
The voltage output of the throttle position sensor can be checked during step (g) using an intelligent tester. Variations in the voltage output indicate that the throttle actuator is in operation. To check the voltage output using an intelligent tester, select the following menu items: DIAGNOSIS / ENHANCED OBD II / DATA LIST / PRIMARY / THROTTLE POS #1.

OK:

No DTC output.

NG → **REPLACE THROTTLE WITH MOTOR BODY ASSEMBLY (See page ES-428)**

OK

CHECK FOR INTERMITTENT PROBLEMS

DTC	P2120	Throttle / Pedal Position Sensor / Switch "D" Circuit
DTC	P2122	Throttle / Pedal Position Sensor / Switch "D" Circuit Low Input
DTC	P2123	Throttle / Pedal Position Sensor / Switch "D" Circuit High Input
DTC	P2125	Throttle / Pedal Position Sensor / Switch "E" Circuit
DTC	P2127	Throttle / Pedal Position Sensor / Switch "E" Circuit Low Input
DTC	P2128	Throttle / Pedal Position Sensor / Switch "E" Circuit High Input
DTC	P2138	Throttle / Pedal Position Sensor / Switch "D" / "E" Voltage Correlation

HINT:
These DTCs relate to the Accelerator Pedal Position (APP) sensor.

DESCRIPTION

HINT:
This ETCS (Electronic Throttle Control System) does not use a throttle cable.
The Accelerator Pedal Position (APP) sensor is mounted on the accelerator pedal bracket and has 2 sensor circuits: VPA (main) and VPA2 (sub). This sensor is a non-contact type, and uses Hall-effect elements, in order to yield accurate signals, even in extreme driving conditions, such as at high speeds as well as very low speeds. The voltage, which is applied to terminals VPA and VPA2 of the ECM, varies between 0 V and 5 V in proportion to the operating angle of the accelerator pedal (throttle valve). A signal from VPA indicates the actual accelerator pedal opening angle (throttle valve opening angle) and is used for engine control. A signal from VPA2 conveys the status of the VPA circuit and is used to check the APP sensor itself.
The ECM monitors the actual accelerator pedal opening angle (throttle valve opening angle) through the signals from VPA and VPA2, and controls the throttle actuator according to these signals.

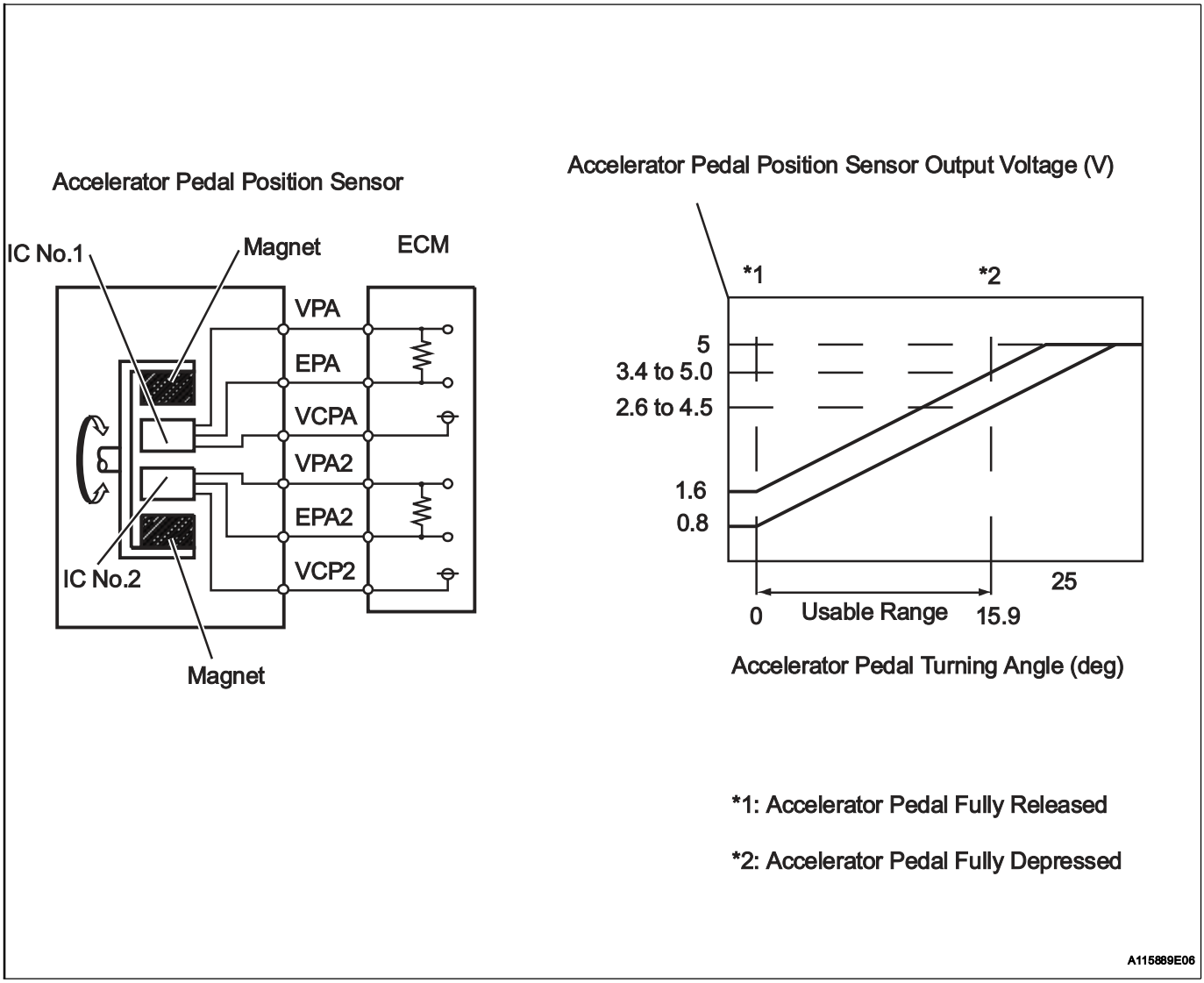

DTC No.	DTC Detection Conditions	Trouble Areas
P2120	VPA fluctuates rapidly beyond upper and lower malfunction thresholds for 0.5 seconds or more (1 trip detection logic)	• Accelerator Pedal Position (APP) sensor • ECM
P2122	VPA 0.4 V or less for 0.5 seconds or more when accelerator pedal fully released (1 trip detection logic)	• APP sensor • Open in VCP1 circuit • Open or ground short in VPA circuit • ECM
P2123	VPA 4.8 V or more for 2.0 seconds or more (1 trip detection logic)	• APP sensor • Open in EPA circuit • ECM
P2125	VPA2 fluctuates rapidly beyond upper and lower malfunction thresholds for 0.5 seconds or more (1 trip detection logic)	• APP sensor • ECM
P2127	VPA2 1.2 V or less for 0.5 seconds or more when accelerator pedal fully released (1 trip detection logic)	• APP sensor • Open in VCP2 circuit • Open or ground short in VPA2 circuit • ECM
P2128	Conditions (a) and (b) continue for 2.0 seconds or more (1 trip detection logic) (a) VPA2 4.8 V or more (b) VPA between 0.4 V and 3.45 V	• APP sensor • Open in EPA2 circuit • ECM
P2138	Condition (a) or (b) continues for 2.0 seconds or more (1 trip detection logic) (a) Difference between VPA and VPA2 0.02 V or less (b) VPA 0.4 V or less and VPA2 1.2 V or less	• Short between VPA and VPA2 circuits • APP sensor • ECM

HINT:
When any of these DTCs are set, check the APP sensor voltage by selecting the following menu items on an intelligent tester: DIAGNOSIS / ENHANCED OBD II / DATA LIST / PRIMARY / ACCEL POS #1 and ACCEL POS #2.

Trouble Areas	ACCEL POS #1 When Accelerator Pedal Released	ACCEL POS #2 When Accelerator Pedal Released	ACCEL POS #1 When Accelerator Pedal Depressed	ACCEL POS #2 When Accelerator Pedal Depressed
VCP circuit open	0 to 0.2 V	0 to 0.2 V	0 to 0.2 V	0 to 0.2 V
Open or ground short in VPA circuit	0 to 0.2 V	1.2 to 2.0 V	0 to 0.2 V	3.4 to 5.0 V
Open or ground short in VPA2 circuit	0.5 to 1.1 V	0 to 0.2 V	2.6 to 4.5 V	0 to 0.2 V
EPA circuit open	4.5 to 5.0 V	4.5 to 5.0 V	4.5 to 5.0 V	4.5 to 5.0 V
Normal condition	0.5 to 1.1 V	1.2 to 2.0 V	2.6 to 4.5 V	3.4 to 5.0 V

HINT:
Accelerator pedal positions are expressed as voltages.

ES

MONITOR DESCRIPTION

When either of the output voltages of VPA or VPA2 deviates from the standard range, or the difference between the output voltages of the 2 sensor circuits is less than the threshold, the ECM determines that there is a malfunction in the APP sensor. The ECM then illuminates the MIL and sets a DTC.
Example:
When the output voltage of VPA drops to below 0.4 V for more than 0.5 seconds when the accelerator pedal is fully depressed, DTC P2122 is set.
If the malfunction is not repaired successfully, a DTC is set 2 seconds after the engine is next started.

MONITOR STRATEGY

Related DTCs	P2120: Accelerator Pedal Position (APP) sensor 1 range check (fluctuating) P2122: APP sensor 1 range check (low voltage) P2123: APP sensor 1 range check (high voltage) P2125: APP sensor 2 range check (fluctuating) P2127: APP sensor 2 range check (low voltage) P2128: APP sensor 2 range check (high voltage) P2138: APP sensor range check (correlation)
Required Sensors/Components (Main)	APP sensor
Required Sensors/Components (Related)	-
Frequency of Operation	Continuous
Duration	0.5 seconds: P2120, P2122, P2125 and P2127 2.0 seconds: P2123, P2128 and P2138
MIL Operation	Immediate
Sequence of Operation	None

TYPICAL ENABLING CONDITIONS

Monitor runs whenever following DTCs not present	None
Ignition switch	ON
Electronic throttle actuator power	ON

TYPICAL MALFUNCTION THRESHOLDS

P2120:

Either of the following conditions is met:	Condition 1 or 2
1. VPA1 voltage when VPA2 voltage is 0.04 V or more	0.4 V or less
2. VPA1 voltage	4.8 V or more

P2122:

VPA1 voltage when VPA2 voltage is 0.04 V or more	0.4 V or less

P2123:

VPA1 voltage	4.8 V or more

P2125:

Either of the following conditions is met:	Condition 1 or 2
1. VPA2 voltage when VPA1 is 0.04 V or more	1.2 V or less
2. VPA2 voltage when VPA1 is 0.4 to 3.45 V	4.8 V or more

P2127:

VPA2 voltage when VPA1 0.04 V or more	1.2 V or less

ES

P2128:

VPA2 voltage when VPA1 0.4 to 3.45 V	4.8 V or more

P2138:

Either of following conditions A or B met:	-
Condition A	-
Difference between VPA1 and VPA 2 voltages	0.02 V or less
Condition B	-
VPA1 voltage	0.4 V or less
VPA2 voltage	1.2 V or less

COMPONENT OPERATING RANGE

VPA1 voltage	0.5 V to 4.5 V
VPA2 voltage	1.2 V to 5.0 V

FAIL-SAFE

When any of DTCs P2120, P2121, P2122, P2123, P2125, P2127, P2128 and P2138 are set, the ECM enters fail-safe mode. If either of the 2 sensor circuits malfunctions, the ECM uses the remaining circuit to calculate the accelerator pedal position to allow the vehicle to continue driving. If both of the circuits malfunction, the ECM regards the accelerator pedal as being released. As a result, the throttle valve is closed and the engine idles.

Fail-safe mode continues until a pass condition is detected, and the ignition switch is turned OFF.

WIRING DIAGRAM

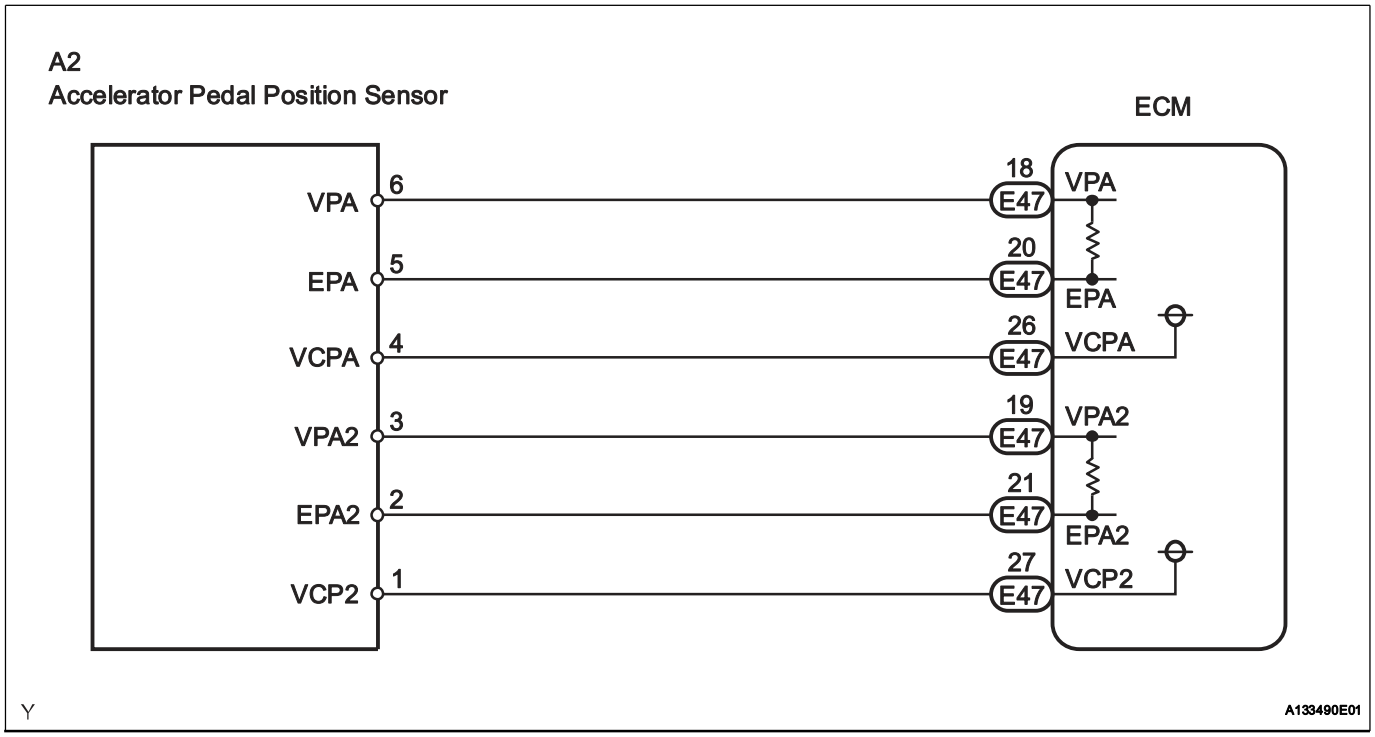

INSPECTION PROCEDURE

HINT:

Read freeze frame data using an intelligent tester. Freeze frame data record the engine condition when malfunctions are detected. When troubleshooting, freeze frame data can help determine if the vehicle was moving or stationary, if the engine was warmed up or not, if the air-fuel ratio was lean or rich, and other data, from the time the malfunction occurred.

1	READ VALUE USING INTELLIGENT TESTER (ACCEL POS #1 AND ACCEL POS #2)

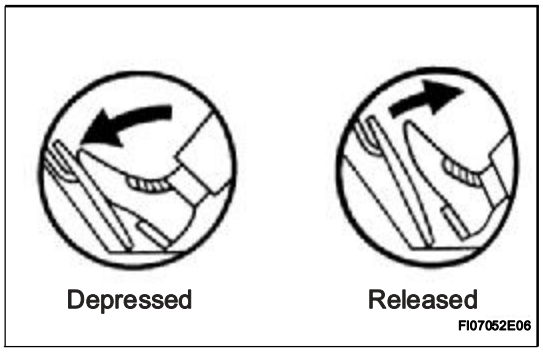

(a) Connect an intelligent tester to the DLC3.
(b) Turn the ignition switch ON and turn the tester ON.
(c) Select the following menu items: DIAGNOSIS / ENHANCED OBD II / DATA LIST / ETCS / ACCEL POS #1 and ACCEL POS #2.
(d) Read the value displayed on the tester.

Standard Voltage

Accelerator Pedal Operations	ACCEL POS #1	ACCEL POS #2
Released	0.5 to 1.1 V	1.2 to 2.0 V
Depressed	2.6 to 4.5 V	3.4 to 5.0 V

OK → **Go to step 5**

NG

2	CHECK HARNESS AND CONNECTOR (ACCELERATOR PEDAL POSITION SENSOR - ECM)

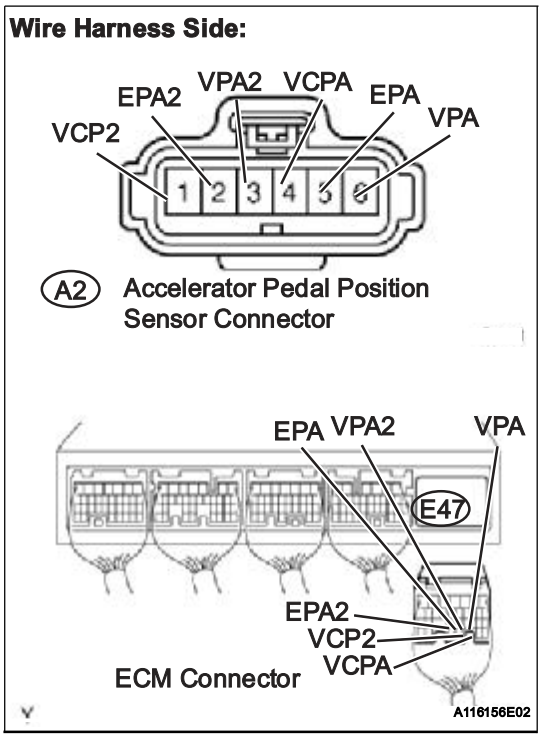

(a) Disconnect the A2 Accelerator Pedal Position (APP) sensor connector.
(b) Disconnect the E47 ECM connector.
(c) Check the resistance.

Standard Resistance (Check for open)

Tester Connections	Specified Conditions
VPA (A2-6) - VPA (E47-18)	Below 1 Ω
EPA (A2-5) - EPA (E47-20)	
VCPA (A2-4) - VCPA (E47-26)	
VPA2 (A2-3) - VPA2 (E47-19)	
EPA2 (A2-2) - EPA2 (E47-21)	
VCP2 (A2-1) - VCP2 (E47-27)	

Standard Resistance (Check for short)

Tester Connections	Specified Conditions
VPA (A2-6) or VPA (E47-18) - Body ground	10 kΩ or higher
EPA (A2-5) or EPA (E47-20) - Body ground	
VCPA (A2-4) or VCPA (E47-26) - Body ground	
VPA2 (A2-3) or VPA2 (E47-19) - Body ground	
EPA2 (A2-2) or EPA2 (E47-21) - Body ground	
VCP2 (A2-1) or VCP2 (E47-27) - Body ground	

(d) Reconnect the APP sensor connector.
(e) Reconnect the ECM connector.

NG → **REPAIR OR REPLACE HARNESS OR CONNECTOR**

OK

3 INSPECT ECM (VCPA AND VCP2 VOLTAGE)

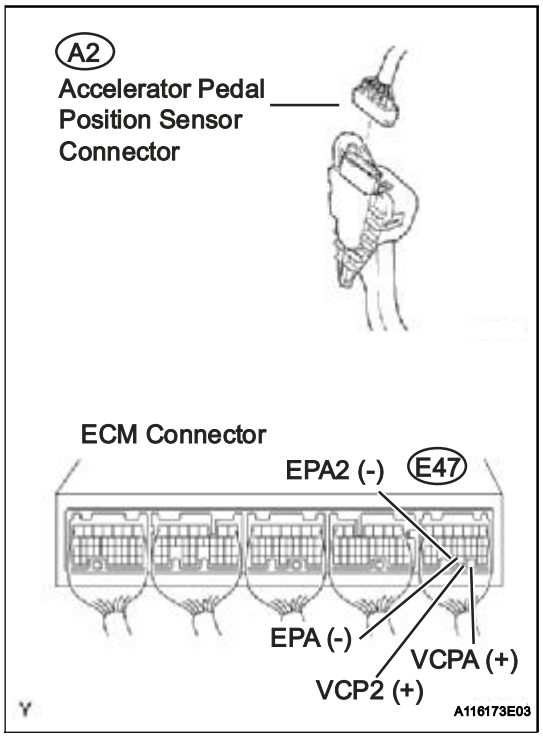

(a) Disconnect the A2 APP sensor connector.
(b) Turn the ignition switch ON.
(c) Measure the voltage between the terminals of the E47 ECM connector.

Standard Voltage

Tester Connections	Specified Conditions
VCPA (E47-26) - EPA (E47-20)	4.5 to 5.5 V
VCP2 (E47-27) - EPA2 (E47-21)	

(d) Reconnect the APP sensor connector.

NG → **REPLACE ECM (See page ES-446)**

OK

4 REPLACE ACCELERATOR PEDAL ROD ASSEMBLY

Replace the accelerator pedal rod assembly (See page ES-449).

NEXT

5 CHECK WHETHER DTC OUTPUT RECURS (ACCELERATOR PEDAL POSITION SENSOR DTCS)

(a) Connect an intelligent tester to the DLC3.
(b) Turn the ignition switch ON and turn the tester ON.
(c) Clear DTCs (See page ES-38).
(d) Start the engine.
(e) Allow the engine to idle for 15 seconds.
(f) Select the following menu items: DIAGNOSIS / ENHANCED OBD II / DTC INFO / CURRENT CODES.
(g) Read DTCs.

Result

Display (DTC Output)	Proceed To
P2120, P2122, P2123, P2125, P2127, P2128 and/or P2138	A
No output	B

B → **SYSTEM OK**

A

REPLACE ECM (See page ES-446)

DTC	P2121	Throttle / Pedal Position Sensor / Switch "D" Circuit Range / Performance

HINT:
This DTC relates to the Accelerator Pedal Position (APP) sensor.

DESCRIPTION

Refer to DTC P2120 (See page ES-296).

DTC No.	DTC Detection Conditions	Trouble Areas
P2121	Difference between VPA and VPA2 less than 0.4 V, or more than 1.2 V for 0.5 seconds (1 trip detection logic)	• Accelerator pedal position sensor • ECM

ES

MONITOR DESCRIPTION

The accelerator pedal position sensor is mounted on the accelerator pedal bracket. The accelerator pedal position sensor has 2 sensor elements and 2 signal outputs: VPA and VPA2. VPA is used to detect the actual accelerator pedal angle (used for engine control) and VPA2 is used to detect malfunctions in VPA. When the difference between the voltage outputs of VPA and VPA2 deviates from the standard, the ECM determines that the accelerator pedal position sensor is a malfunctioning. The ECM turns on the MIL and the DTC is set.

MONITOR STRATEGY

Related DTCs	P2121: Accelerator pedal position (APP) sensor rationality
Required Sensors/Components (Main)	APP sensor
Required Sensors/Components (Related)	-
Frequency of Operation	Continuous
Duration	0.5 seconds
MIL Operation	Immediate
Sequence of Operation	None

TYPICAL ENABLING CONDITIONS

Monitor runs whenever following DTCs not present	None
Either of following conditions 1 or 2 met:	-
1. Ignition switch	ON
2. Throttle actuator power	ON

TYPICAL MALFUNCTION THRESHOLDS

Difference between VPA voltage (learned value) and VPA2 voltage (learned value)	Less than 0.4 V, or more than 1.2 V

FAIL-SAFE

The accelerator pedal position sensor has two (main and sub) sensor circuits. If a malfunction occurs in either of the sensor circuits, the ECM detects the abnormal signal voltage difference between the two sensor circuits and switches to limp mode. In limp mode, the functioning circuit is used to calculate the accelerator pedal opening angle to allow the vehicle to continue driving. If both circuits malfunction, the ECM regards the opening angle of the accelerator pedal as being fully closed. In this case, the throttle valve remains closed as if the engine is idling.
If a pass condition is detected and then the ignition switch is turned OFF, the fail-safe operation stops and the system returns to a normal condition.

WIRING DIAGRAM

Refer to DTC P2120 (See page ES-300).

INSPECTION PROCEDURE

HINT:

Read freeze frame data using an intelligent tester. Freeze frame data record the engine condition when malfunctions are detected. When troubleshooting, freeze frame data can help determine if the vehicle was moving or stationary, if the engine was warmed up or not, if the air-fuel ratio was lean or rich, and other data, from the time the malfunction occurred.

ES

1	READ VALUE USING INTELLIGENT TESTER (ACCEL POS #1 AND ACCEL POS #2)

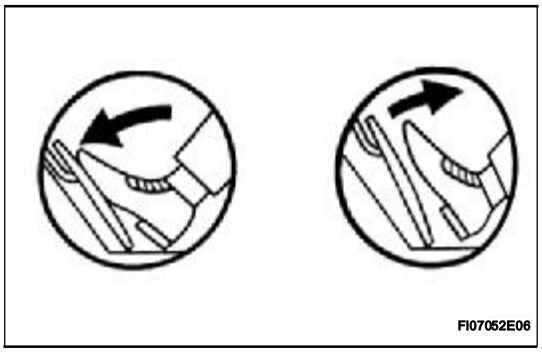

(a) Connect an intelligent tester to the DLC3.
(b) Turn the ignition switch ON and turn the tester ON.
(c) Select the following menu items: DIAGNOSIS / ENHANCED OBD II / DATA LIST / ETCS / ACCEL POS #1 and ACCEL POS #2.
(d) Read the values displayed on the tester.

Standard Voltage

Accelerator Pedal Operations	ACCEL POS #1	ACCEL POS #2
Released	0.5 to 1.1 V	1.2 to 2.0 V
Depressed	2.6 to 4.5 V	3.4 to 5.0 V

OK → Go to step 3

NG ↓

2	CHECK HARNESS AND CONNECTOR (ACCELERATOR PEDAL POSITION SENSOR - ECM) (See page ES-306)

NG → REPAIR OR REPLACE HARNESS OR CONNECTOR

OK ↓

3	REPLACE ACCELERATOR PEDAL ROD ASSEMBLY

Replace the accelerator pedal rod assembly (See page ES-449).

NEXT ↓

4	CHECK WHETHER DTC OUTPUT RECURS (DTC P2121)

(a) Connect an intelligent tester to the DLC3.
(b) Turn the ignition switch ON and turn the tester ON.
(c) Clear DTCs (See page ES-38).
(d) Start the engine.
(e) Allow the engine to idle for 15 seconds.

(f) Select the following menu items: DIAGNOSIS / ENHANCED OBD II / DTC INFO / CURRENT CODES.
(g) Read DTCs.

Result

Display (DTC Output)	Proceed To
P2121	A
No output	B

B → **SYSTEM OK**

A

REPLACE ECM (See page ES-446)

ES

DTC	P2195	Oxygen (A/F) Sensor Signal Stuck Lean (Bank 1 Sensor 1)

DTC	P2196	Oxygen (A/F) Sensor Signal Stuck Rich (Bank 1 Sensor 1)

DTC	P2197	Oxygen (A/F) Sensor Signal Stuck Lean (Bank 2 Sensor 1)

ES

DTC	P2198	Oxygen (A/F) Sensor Signal Stuck Rich (Bank 2 Sensor 1)

HINT:
- Although the DTC titles say oxygen sensor, these DTCs relate to the Air-Fuel Ratio (A/F) sensor.
- Sensor 1 refers to the sensor mounted in front of the Three-Way Catalytic Converter (TWC) and located near the engine assembly.

DESCRIPTION

The A/F sensor generates a voltage* that corresponds to the actual air-fuel ratio. This sensor voltage is used to provide the ECM with feedback so that it can control the air-fuel ratio. The ECM determines the deviation from the stoichiometric air-fuel ratio level, and regulates the fuel injection time. If the A/F sensor malfunctions, the ECM is unable to control the air-fuel ratio accurately.
The A/F sensor is the planar type and is integrated with the heater, which heats the solid electrolyte (zirconia element). This heater is controlled by the ECM. When the intake air volume is low (the exhaust gas temperature is low), a current flows into the heater to heat the sensor, in order to facilitate accurate oxygen concentration detection. In addition, the sensor and heater portions are narrower than the conventional type. The heat generated by the heater is conducted to the solid electrolyte though the alumina, therefore the sensor activation is accelerated.
In order to obtain a high purification rate of the carbon monoxide (CO), hydrocarbon (HC) and nitrogen oxide (NOx) components in the exhaust gas, a TWC is used. For the most efficient use of the TWC, the air-fuel ratio must be precisely controlled so that it is always close to the stoichiometric level.
*: Value changes inside the ECM. Since the A/F sensor is the current output element, a current is converted in to a voltage inside the ECM. Any measurements taken at the A/F sensor or ECM connectors will show a constant voltage.

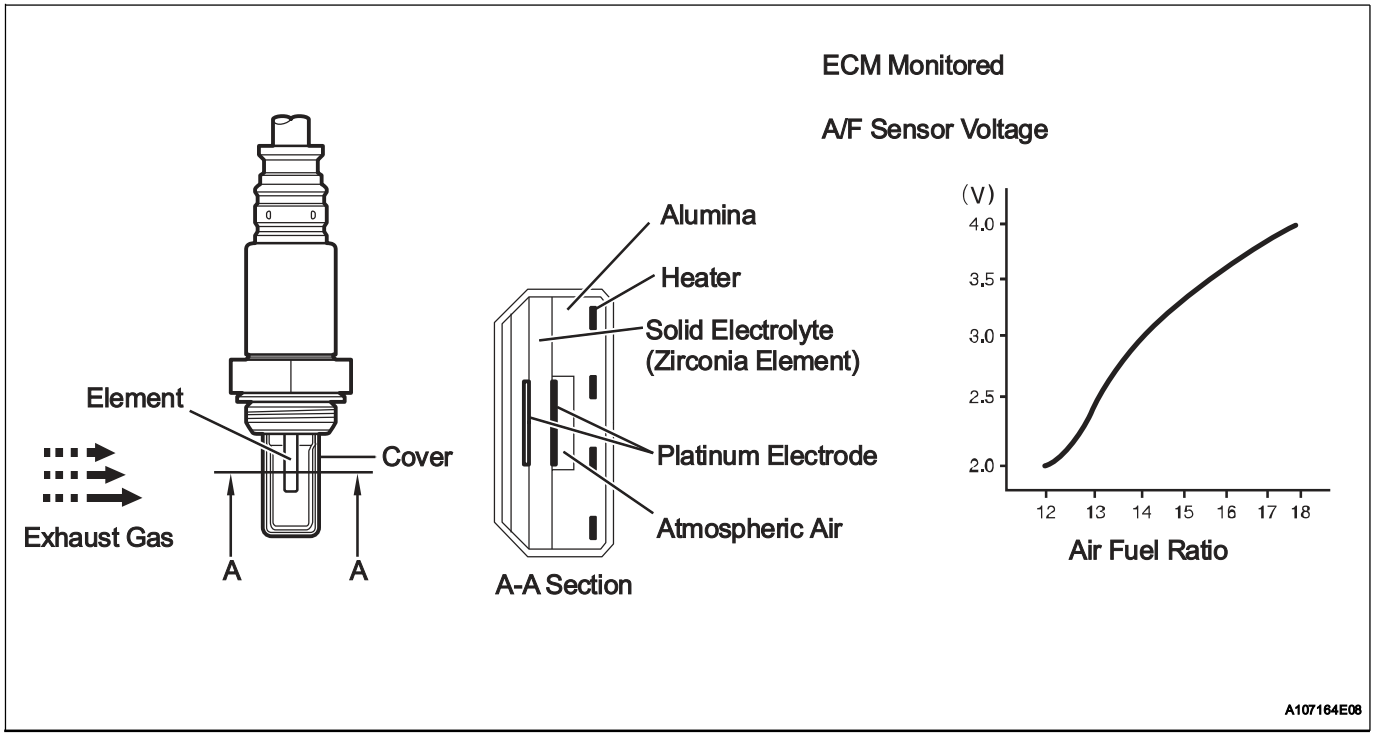

DTC No.	DTC Detection Conditions	Trouble Areas
P2195 P2197	Conditions (a) and (b) continue for 10 seconds or more (2 trip detection logic) (a) Air-Fuel Ratio (A/F) sensor voltage more than 3.8 V (b) Heated Oxygen (HO2) sensor voltage 0.15 V or more	• Open or short in A/F sensor (bank 1, 2 sensor 1) circuit • A/F sensor (bank 1, 2 sensor 1) • A/F sensor (bank 1, 2 sensor 1) heater • A/F sensor heater relay • A/F sensor heater and relay circuits • Air induction system • Fuel pressure • Injector • ECM
	While fuel-cut operation performed (during vehicle deceleration), air-furl ratio (A/F) sensor current 3.6 mA or more for 3 seconds (2 trip detection logic)	• A/F sensor • ECM
P2196 P2198	Conditions (a) and (b) continue for 10 seconds or more (2 trip detection logic) (a) A/F sensor voltage less than 2.8 V (b) HO2 sensor voltage less than 0.6 V	• Open or short in A/F sensor (bank 1, 2 sensor 1) circuit • A/F sensor (bank 1, 2 sensor 1) • A/F sensor (bank 1, 2 sensor 1) heater • A/F sensor heater relay • A/F sensor heater and relay circuits • Air induction system • Fuel pressure • Injector • ECM
	While fuel-cut operation performed (during vehicle deceleration), air-furl ratio (A/F) sensor current less than 1.4 mA for 3 seconds (2 trip detection logic)	• A/F sensor • ECM

HINT:
- DTCs P2195 and P2196 indicate malfunctions related to bank 1 A/F sensor circuit.
- DTCs P2197 and P2198 indicate malfunctions related to bank 2 A/F sensor circuit.
- Bank 1 refers to the bank that includes cylinder No. 1.
- Bank 2 refers to the bank that includes cylinder No. 2.
- When any of these DTCs are set, check the A/F sensor voltage output by selecting the following menu items on an intelligent tester: DIAGNOSIS / ENHANCED OBD II / DATA LIST / PRIMARY / AFS B1S1 or AFS B2S1.
- Short-term fuel trim values can also be read using an intelligent tester.

- The ECM regulates the voltages at the A1A+, A2A+, A1A- and A2A- terminals of the ECM to a constant level. Therefore, the A/F sensor voltage output cannot be confirmed without using an intelligent tester.
- If a A/F sensor malfunction is detected, the ECM sets a DTC.

MONITOR DESCRIPTION

Sensor voltage detection monitor

Under the air-fuel ratio feedback control, if the A/F sensor voltage output indicates rich or lean for a certain period of time, the ECM determines that there is a malfunction in the A/F sensor. The ECM illuminates the MIL and sets a DTC.

Example:

If the A/F sensor voltage output is less than 2.8 V (very rich condition) for 10 seconds, despite the HO2 sensor voltage output being less than 0.6 V, the ECM sets DTC P2196 or P2198. Alternatively, if the A/F sensor voltage output is more than 3.8 V (very lean condition) for 10 seconds, despite the HO2 sensor voltage output being 0.15 V or more, DTC P2195 or P2197 is set.

ES

Sensor current detection monitor

A rich air-fuel mixture causes a low A/F sensor current, and a lean air-fuel mixture causes a high A/F sensor current. Therefore, the sensor output becomes low during acceleration, and it becomes high during deceleration with the throttle valve fully closed. The ECM monitors the A/F sensor current during fuel-cut and detects any abnormal current values.

If the A/F sensor output is 3.6 mA or more for more than 3 seconds of cumulative time, the ECM interprets this as a malfunction in the A/F sensor and sets DTC P2195 or P2197 (high-side stuck). If the A/F sensor output is 1.4 mA or less for more than 3 seconds of cumulative time, the ECM sets DTC P2196 or P2198 (low-side stuck).

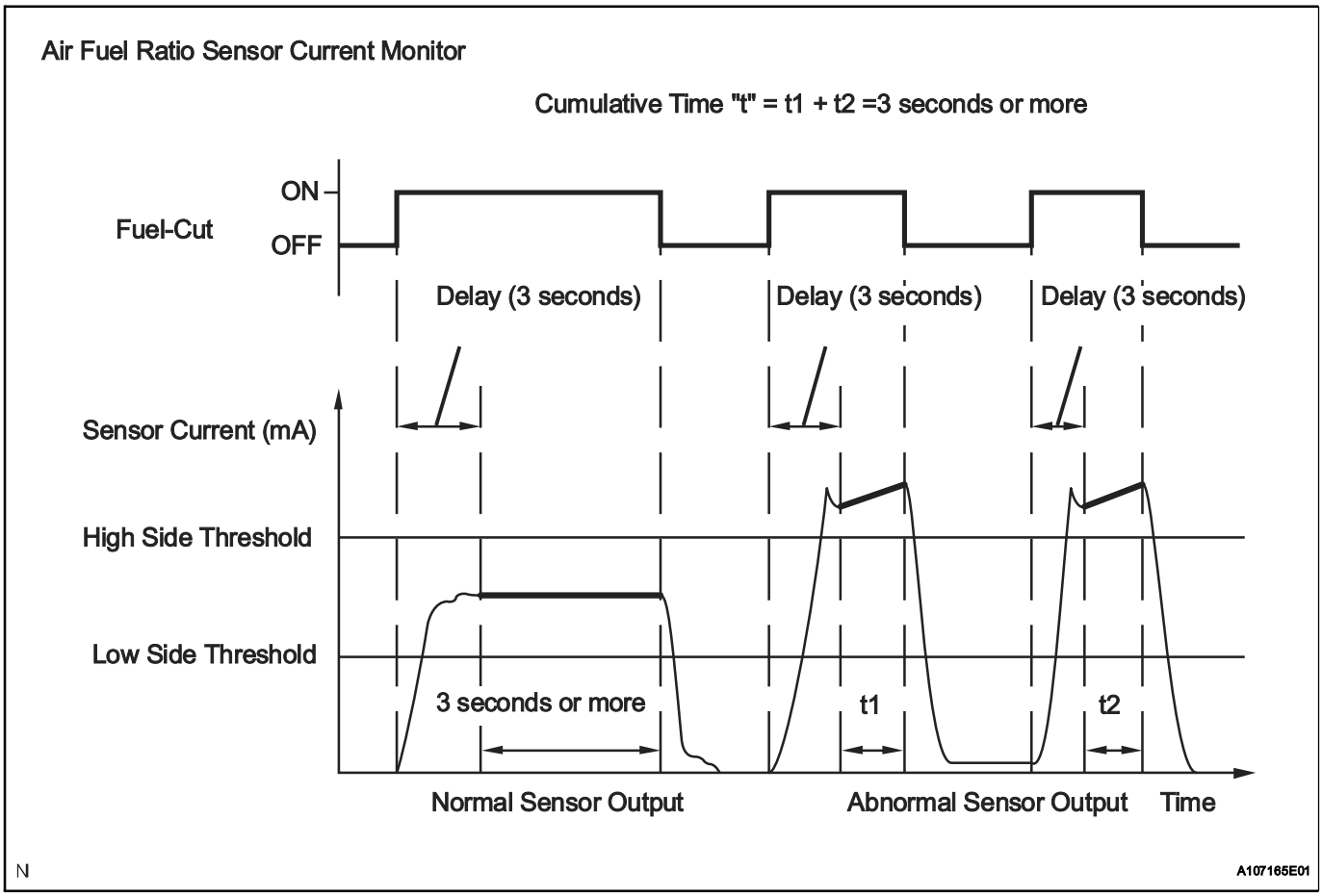

MONITOR STRATEGY

Related DTCs	P2195: A/F sensor (Bank 1) signal stuck lean P2196: A/F sensor (Bank 1) signal stuck rich P2197: A/F sensor (Bank 2) signal stuck lean P2198: A/F sensor (Bank 2) signal stuck rich
Required Sensors/Components (Main)	A/F sensor
Required Sensors/Components (Related)	HO2 sensor
Frequency of Operation	Continuous
Duration	10 seconds: Sensor voltage detection monitor 3 seconds: Sensor current detection monitor
MIL Operation	2 driving cycles
Sequence of Operation	None

ES

TYPICAL ENABLING CONDITIONS

ALL

Monitor runs whenever following DTCs not present	P0031, P0032, P0051, P0052 (A/F sensor heater - Sensor 1) P0037, P0038, P0057, P0058 (O2 Sensor heater - Sensor 2) P0100 - P0103 (MAF meter) P0110 - P0113 (IAT sensor) P0115 - P0118 (ECT sensor) P0120 - P0223, P2135 (TP sensor) P0125 (Insufficient ECT for closed loop) P0136, P0156 (O2 Sensor - Sensor 2) P0171, P0172, P0174, P0175 (Fuel system) P0300 - P0306 (Misfire) P0335 (CKP sensor) P0340, P0341 (CMP sensor) P0455, P0456 (EVAP system) P0500 (VSS)

Sensor voltage detection monitor (Lean side malfunction P2195, P2197):

Time while all of following conditions met	2 seconds or more
Rear HO2 sensor voltage	0.15 V or more
Time after engine start	30 seconds or more
A/F sensor status	Activated
Fuel system status	Closed-loop
Engine	Running

Sensor voltage detection monitor (Rich side malfunction P2196, P2198):

Time while all of following conditions met	2 seconds or more
Rear HO2 sensor voltage	Below 0.6 V
Time after engine start	30 seconds or more
A/F sensor status	Activated
Fuel system status	Closed-loop
Engine	Running

Sensor current detection monitor (P2195, P2196, P2197, P2198):

Battery voltage	11 V or more
Atmospheric pressure	76 kpa (570 mmHg) or higher
Air-fuel ratio sensor status	Activated
Engine coolant temperature	75°C (167°F) or more
Continuous time of fuel cut	3 to 10 seconds

TYPICAL MALFUNCTION THRESHOLDS

Sensor voltage detection monitor (Lean side malfunction P2195, P2197):

A/F sensor voltage	More than 3.8 V for 10 seconds

Sensor voltage detection monitor (Rich side malfunction P2196, P2198):

A/F sensor voltage	Less than 2.8 V for 10 seconds

Sensor current detection monitor (High side malfunction P2195, P2197):

Air-fuel ratio sensor current during fuel cut	3.6 mA or more

Sensor current detection monitor (Low side malfunction P2196, P2198):

Air-fuel ratio sensor current during fuel cut	Less than 1.4 mA

ES

MONITOR RESULT

Refer to CHECKING MONITOR STATUS (See page ES-20).

WIRING DIAGRAM

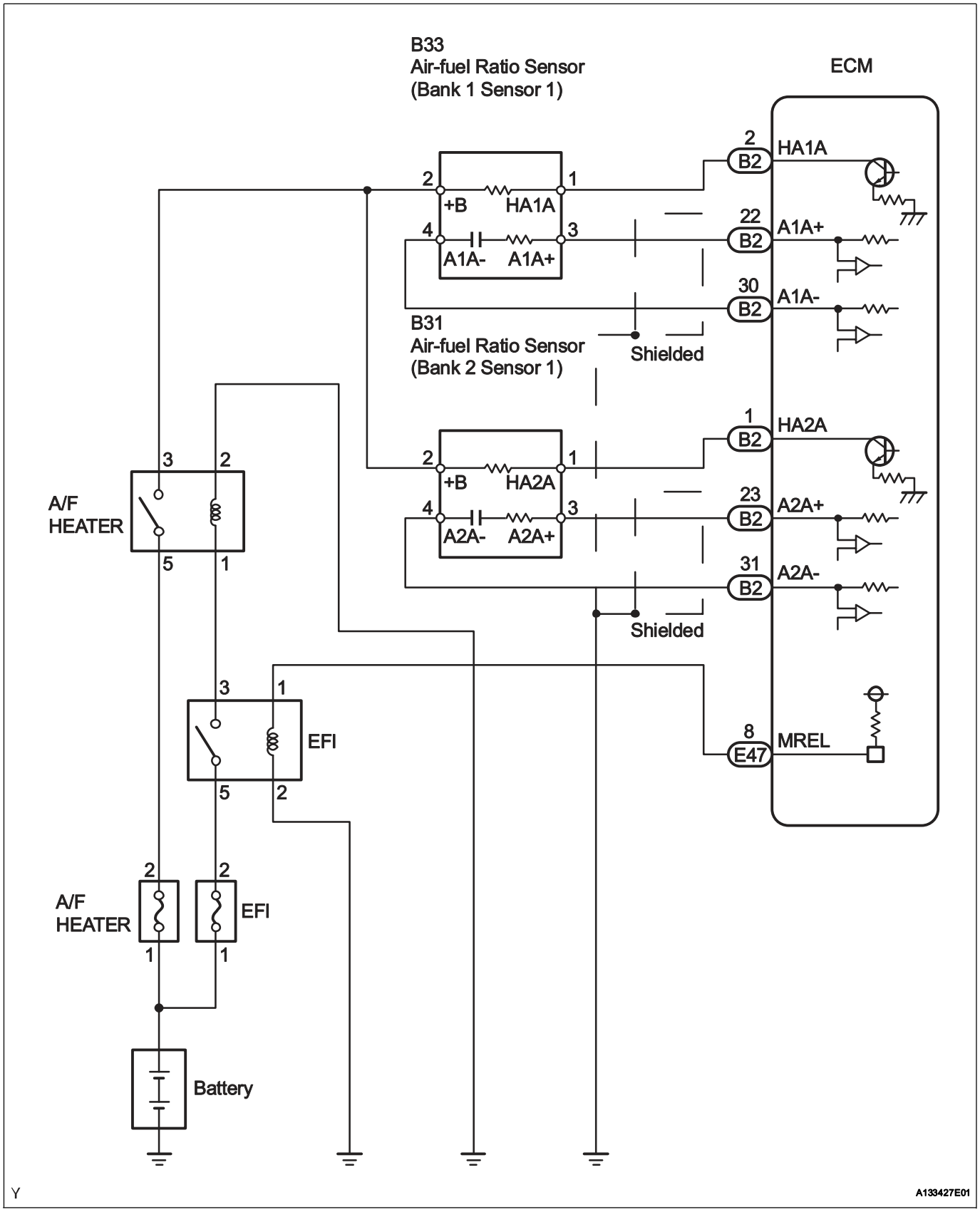

CONFIRMATION DRIVING PATTERN

This confirmation driving pattern is used in the "PERFORM CONFIRMATION DRIVING PATTERN" procedure of the following diagnostic troubleshooting procedure.

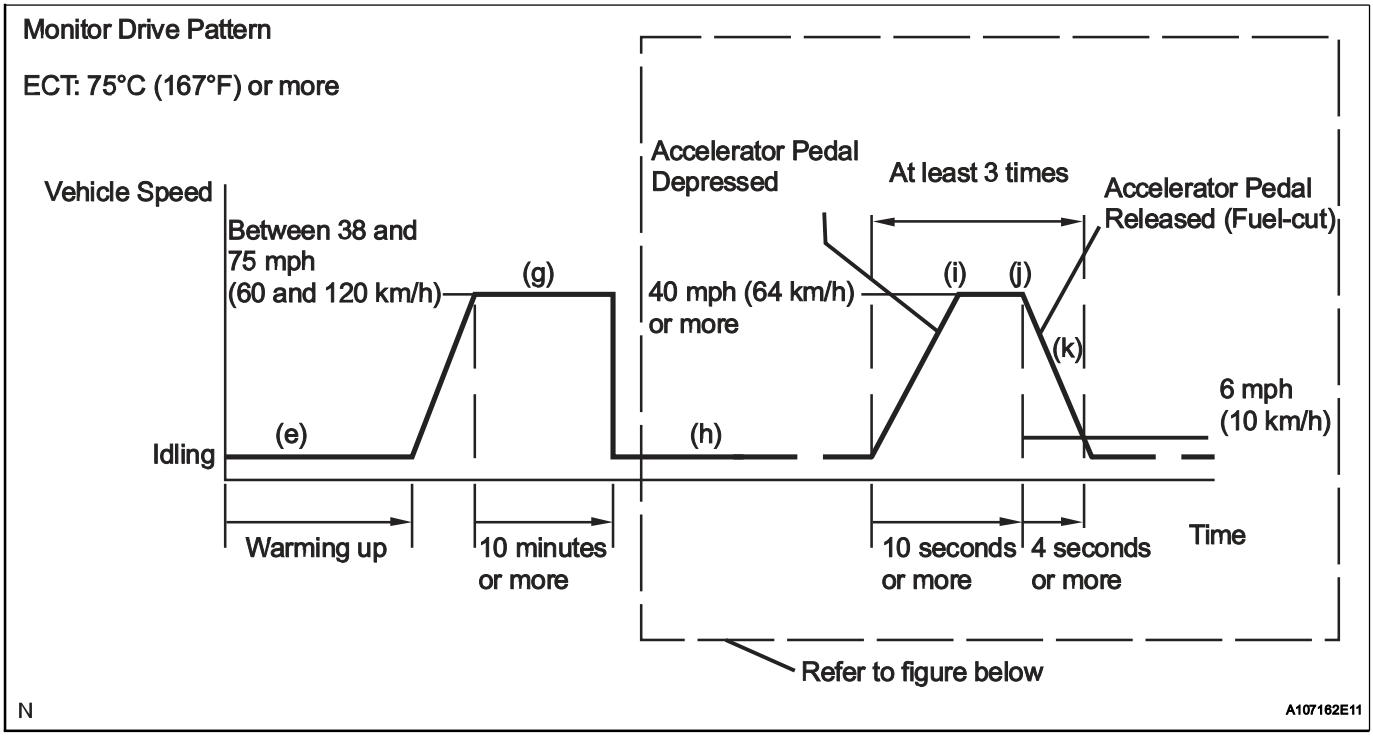

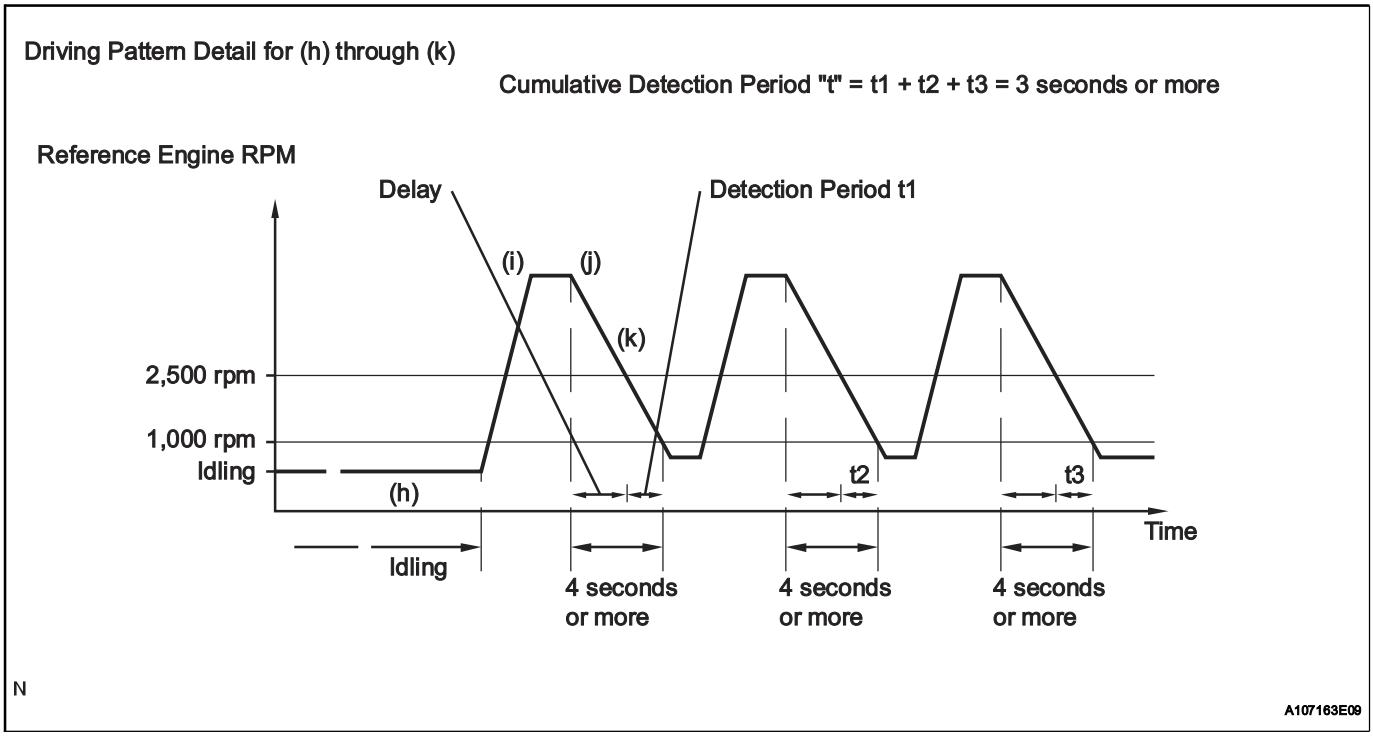

(a) Connect an intelligent tester to the DLC3.
(b) Turn the ignition switch ON.
(c) Turn the tester ON.
(d) Clear DTCs (See page ES-38).
(e) Start the engine, and warm it up until the ECT reaches 75°C (167°F) or higher.
(f) Select the following menu items to check the fuel-cut status: DIAGNOSIS / ENHANCED OBD II / DATA LIST / USER DATA / FC IDLE.
(g) Drive the vehicle at between 38 mph (60 km/h) and 75 mph (120 km/h) for at least 10 minutes.
(h) Change the transmission to 2nd gear.

(i) Drive the vehicle at proper vehicle speed to perform fuel-cut operation (refer to the following HINT).
HINT:
Fuel-cut is performed when the following conditions are met:
- Accelerator pedal fully released.
- Engine speed is 2,500 rpm or more (fuel injection returns at 1,000 rpm).

(j) Accelerate the vehicle to 40 mph (64 km/h) or more by depressing the accelerator pedal for at least 10 seconds.
(k) Soon after performing step (j) above, release the accelerator pedal for at least 4 seconds without depressing the brake pedal, in order to execute fuel-cut control.
(l) Allow the vehicle to decelerate until the vehicle speed declines to less than 6 mph (10 km/h).
(m) Repeat steps from (h) through (k) above at least 3 times in one driving cycle.
HINT:
Completion of all A/F sensor monitors is required to change the value in TEST RESULT.
CAUTION:
Strictly observe posted speed limits, traffic laws, and road conditions when performing these drive patterns.

INSPECTION PROCEDURE

HINT:
Malfunctioning areas can be identified by performing the A/F CONTROL function provided in the ACTIVE TEST. The A/F CONTROL function can help to determine whether the Air-Fuel Ratio (A/F) sensor, Heated Oxygen (HO2) sensor and other potential trouble areas are malfunctioning.
The following instructions describe how to conduct the A/F CONTROL operation using an intelligent tester.
(1) Connect an intelligent tester to the DLC3.
(2) Start the engine and turn the tester ON.
(3) Warm up the engine at an engine speed of 2,500 rpm for approximately 90 seconds.
(4) Select the following menu items: DIAGNOSIS / ENHANCED OBD II / ACTIVE TEST / A/F CONTROL.
(5) Perform the A/F CONTROL operation with the engine in an idling condition (press the RIGHT or LEFT button to change the fuel injection volume).
(6) Monitor the voltage outputs of the A/F and HO2 sensors (AFS B1S1 and O2S B1S2 or AFS B2S1 and O2S B2S2) displayed on the tester.
HINT:
- The A/F CONTROL operation lowers the fuel injection volume by 12.5 % or increases the injection volume by 25 %.
- Each sensor reacts in accordance with increases and decreases in the fuel injection volume.

Standard

Tester Display (Sensor)	Injection Volumes	Status	Voltages
AFS B1S1 or AFS B2S1 (A/F)	+25 %	Rich	Less than 3.0
AFS B1S1 or AFS B2S1 (A/F)	-12.5 %	Lean	More than 3.35
O2S B1S2 or O2S B2S2 (HO2)	+25 %	Rich	More than 0.55
O2S B1S2 or O2S B2S2 (HO2)	-12.5 %	Lean	Less than 0.4

NOTICE:
The Air-Fuel Ratio (A/F) sensor has an output delay of a few seconds and the Heated Oxygen (HO2) sensor has a maximum output delay of approximately 20 seconds.

Case	A/F Sensor (Sensor 1) Output Voltage		HO2 Sensor (Sensor 2) Output Voltage		Main Suspected Trouble Areas
1	Injection volume +25 % -12.5 %		Injection volume +25 % -12.5 %		-
	Output voltage More than 3.35 V Less than 3.0 V	OK	Output voltage More than 0.55 V Less than 0.4 V	OK	
2	Injection volume +25 % -12.5 %		Injection volume +25 % -12.5 %		• A/F sensor • A/F sensor heater • A/F sensor circuit
	Output voltage Almost no reaction	NG	Output voltage More than 0.55 V Less than 0.4 V	OK	
3	Injection volume +25 % -12.5 %		Injection volume +25 % -12.5 %		• HO2 sensor • HO2 sensor heater • HO2 sensor circuit
	Output voltage More than 3.35 V Less than 3.0 V	OK	Output voltage Almost no reaction	NG	
4	Injection volume +25 % -12.5 %		Injection volume +25 % -12.5 %		• Injector • Fuel pressure • Gas leakage from exhaust system (Air-fuel ratio extremely lean or rich)
	Output voltage Almost no reaction	NG	Output voltage Almost no reaction	NG	

- Following the A/F CONTROL procedure enables technicians to check and graph the voltage outputs of both the A/F and HO2 sensors.
- To display the graph, select the following menu items on the tester: DIAGNOSIS / ENHANCED OBD II / ACTIVE TEST / A/F CONTROL / USER DATA / AFS B1S1 and O2S B1S2 or AFS B2S1 and O2S B2S2, and press the YES button and then the ENTER button followed by the F4 button.

HINT:

- Read freeze frame data using an intelligent tester. Freeze frame data record the engine condition when malfunctions are detected. When troubleshooting, freeze frame data can help determine if the vehicle was moving or stationary, if the engine was warmed up or not, if the air-fuel ratio was lean or rich, and other data, from the time the malfunction occurred.
- A low A/F sensor voltage could be caused by a rich air-fuel mixture. Check for conditions that would cause the engine to run rich.
- A high A/F sensor voltage could be caused by a lean air-fuel mixture. Check for conditions that would cause the engine to run lean.

1	CHECK ANY OTHER DTCS OUTPUT (IN ADDITION TO P2195, P2196, P2197 OR P2198)

(a) Connect an intelligent tester to the DLC3.
(b) Turn the ignition switch ON.
(c) Turn the tester ON.
(d) Select the following menu items: DIAGNOSIS / ENHANCED OBD II / DTC INFO / CURRENT CODES.
(e) Read DTCs.

Result

Display (DTC Output)	Proceed To
P2195, P2196, P2197 or P2198	A
P2195, P2196, P2197 or P2198 and other DTCs	B

HINT:
If any DTCs other than P2195, P2196, P2197 or P2198 are output, troubleshoot those DTCs first.

B → **GO TO DTC CHART (See page ES-57)**

A

2 READ VALUE USING INTELLIGENT TESTER (TEST VALUE OF A/F SENSOR)

(a) Connect an intelligent tester to the DLC3.
(b) Turn the ignition switch ON and turn the tester ON.
(c) Clear DTCs (See page ES-38).
(d) Allow the vehicle to drive in accordance with the drive pattern described in the CONFIRMATION DRIVING PATTERN.
(e) Select the following menu items on the tester: DIAGNOSIS / ENHANCED OBD II / MONITOR INFO / MONITOR STATUS.
(f) Check that the status of O2S MON is COMPL.
If the status is still INCMPL, drive the vehicle according to the driving pattern again.
HINT:
- AVAIL indicates that the component has not been monitored yet.
- COMPL indicates that the component is functioning normally.
- INCMPL indicates that the component is malfunctioning.

(g) Select the following menu items: DIAGNOSIS / ENHANCED OBD II / MONITOR INFO / TEST RESULT / RANGE B1S1, then press the ENTER button.
(h) Check the test value of the A/F sensor output current during fuel-cut.

Result

Test Value	Proceed To
Within normal range (1.4 mA or more, and less than 3.6 mA)	A
Outside normal range (Less than 1.4 mA, or 3.6 mA or more)	B

B → **Go to step 20**

A

3 READ VALUE USING INTELLIGENT TESTER (OUTPUT VOLTAGE OF A/F SENSOR)

(a) Connect an intelligent tester to the DLC3.
(b) Start the engine.
(c) Turn the tester ON.

(d) Warm up the Air-Fuel Ratio (A/F) sensor at an engine speed of 2,500 rpm for 90 seconds.
(e) Select the following menu items: DIAGNOSIS / ENHANCED OBD II / SNAPSHOT / MANUAL SNAPSHOT / USER DATA / AFS B1S1 or AFS B2S1 and ENGINE SPD.
(f) Check the A/F sensor voltage three times, when the engine is in each of the following conditions:
  (1) While idling (check for at least 30 seconds)
  (2) At an engine speed of approximately 2,500 rpm (without any sudden changes in engine speed)
  (3) Raise the engine speed to 4,000 rpm and then quickly release the accelerator pedal so that the throttle valve is fully closed.

ES

Standard

Conditions	A/F Sensor Voltage Variations	Reference
(1) and (2)	Changes at approximately 3.3 V	Between 3.1 V and 3.5 V
(3)	Increases to 3.8 V or more	This occurs during engine deceleration (when fuel-cut performed)

HINT:
For more information, see the diagrams below.

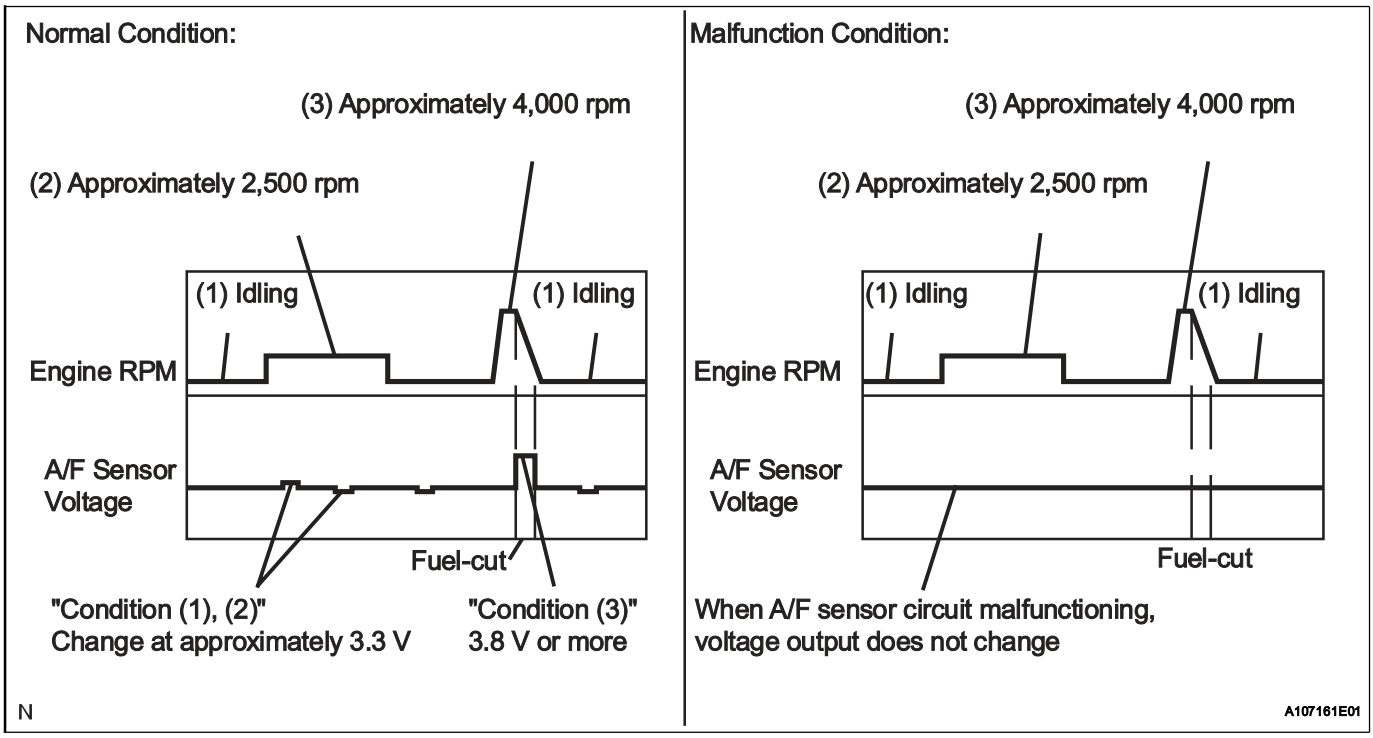

HINT:
- If the output voltage of the A/F sensor remains at approximately 3.3 V (see Malfunction Condition diagram) under any conditions, including those above, the A/F sensor may have an open circuit. (This will also happen if the A/F sensor heater has an open circuit.)
- If the output voltage of the A/F sensor remains at either approximately 3.8 V or more, or 2.8 V or less (see Malfunction Condition diagram) under any conditions, including those above, the A/F sensor may have a short circuit.

- The ECM stops fuel injection (fuel cut) during engine deceleration. This causes a lean condition and results in a momentary increase in the A/F sensor output voltage.
- The ECM must establish a closed throttle valve position learning value to perform fuel cut. If the battery terminal has been reconnected, the vehicle must be driven over 10 mph (16 km/h) to allow the ECM to learn the closed throttle valve position.
- When the vehicle is driven:
  The output voltage of the A/F sensor may be below 2.8 V during fuel enrichment. For the vehicle, this translates to a sudden increase in speed with the accelerator pedal fully depressed when trying to overtake another vehicle. The A/F sensor is functioning normally.
- The A/F sensor is a current output element; therefore, the current is converted into a voltage inside the ECM. Measuring the voltage at the connectors of the A/F sensor or ECM will show a constant voltage result.

NG → **Go to step 10**

OK

4	PERFORM CONFIRMATION DRIVING PATTERN

NEXT

5	CHECK WHETHER DTC OUTPUT RECURS (DTC P2195, P2196, P2197 OR P2198)

(a) Connect an intelligent tester to the DLC3.
(b) Turn the ignition switch ON and the tester ON.
(c) Select the following menu items: DIAGNOSIS / ENHANCED OBD II / DTC INFO / PENDING CODES.
(d) Read DTCs.

Result

Display (DTC Output)	Proceed To
P2195, P2196, P2197 or P2198	A
No output	B

B → **Go to step 9**

A

6	REPLACE AIR FUEL RATIO SENSOR

Replace the air fuel ratio sensor (See page EC-21).

NEXT

7	PERFORM CONFIRMATION DRIVING PATTERN

NEXT

8	CHECK WHETHER DTC OUTPUT RECURS (DTC P2195, P2196, P2197 OR P2198)

(a) Connect an intelligent tester to the DLC3.
(b) Turn the ignition switch ON and the tester ON.
(c) Select the following menu items: DIAGNOSIS / ENHANCED OBD II / DTC INFO / PENDING CODES.
(d) Read DTCs.

ES

Result

Display (DTC Output)	Proceed To
No output	A
P2195, P2196, P2197 or P2198	B

B → REPLACE ECM AND PERFORM CONFIRMATION DRIVING PATTERN

A

9	CONFIRM IF VEHICLE HAS RUN OUT OF FUEL IN PAST

NO → CHECK FOR INTERMITTENT PROBLEMS

YES

DTC CAUSED BY RUNNING OUT OF FUEL

10	INSPECT AIR FUEL RATIO SENSOR (HEATER RESISTANCE) (See page ES-85)

NG → REPLACE AIR FUEL RATIO SENSOR (See page EC-21)

OK

11	INSPECT AIR FUEL RATIO SENSOR HEATER RELAY (See page ES-86)

NG → REPLACE AIR FUEL RATIO SENSOR HEATER RELAY

OK

12 CHECK HARNESS AND CONNECTOR (A/F SENSOR - ECM)

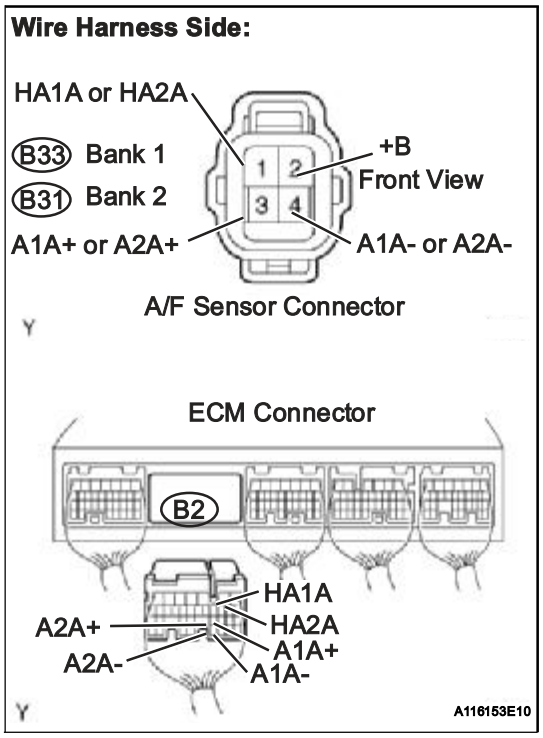

(a) Disconnect the B31 or B33 A/F sensor connector.
(b) Turn the ignition switch ON.
(c) Measure the voltage between the +B terminal of the A/F sensor connector and body ground.

Standard Voltage

Tester Connections	Specified Conditions
+B (B33-2) - Body ground	11 to 14 V
+B (B31-2) - Body ground	

(d) Turn the ignition switch OFF.
(e) Disconnect the B2 ECM connector.
(f) Check the resistance.

Standard Resistance (Check for open)

Tester Connections	Specified Conditions
HA1A (B33-1) - HA1A (B2-2)	Below 1 Ω
A1A+ (B33-3) - A1A+ (B2-22)	
A1A- (B33-4) - A1A- (B2-30)	
HA2A (B31-1) - HA2A (B2-1)	
A2A+ (B31-3) - A2A+ (B2-23)	
A2A- (B31-4) - A2A- (B2-31)	

Standard Resistance (Check for short)

Tester Connections	Specified Conditions
HA1A (B33-1) or HA1A (B2-2) - Body ground	10 kΩ or higher
A1A+ (B33-3) or A1A+ (B2-22) - Body ground	
A1A- (B33-4) or A1A- (B2-30) - Body ground	
HA2A (B31-1) or HA2A (B2-1) - Body ground	
A2A+ (B31-3) or A2A+ (B2-23) - Body ground	
A2A- (B31-4) or A2A- (B2-31) - Body ground	

(g) Reconnect the ECM connector.
(h) Reconnect the A/F sensor connector.

ES

Reference (System Diagram of Bank 1 Sensor 1):

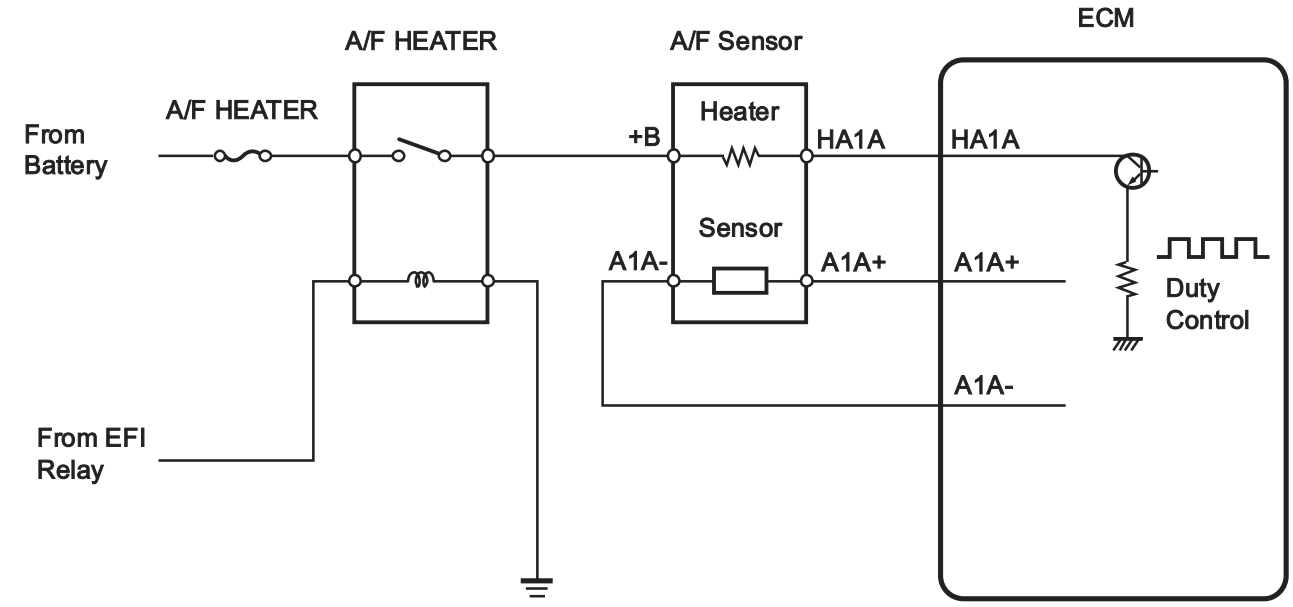

NG → **REPAIR OR REPLACE HARNESS OR CONNECTOR**

OK

13	CHECK AIR INDUCTION SYSTEM

(a) Check the air induction system for vacuum leakage.
OK:
No leakage from air induction system.

NG → **REPAIR OR REPLACE AIR INDUCTION SYSTEM**

OK

14	CHECK FUEL PRESSURE

(a) Check the fuel pressure (See page FU-6).

NG → **REPAIR OR REPLACE FUEL SYSTEM**

OK

15	INSPECT FUEL INJECTOR ASSEMBLY

(a) Check the injector injection (whether fuel volume is high or low, and whether injection pattern is poor).

NG → **REPLACE FUEL INJECTOR ASSEMBLY (See page FU-11)**

OK

16	REPLACE AIR FUEL RATIO SENSOR

Replace the air fuel ratio sensor (See page EC-21).

NEXT

17	PERFORM CONFIRMATION DRIVING PATTERN

NEXT

ES

18	CHECK WHETHER DTC OUTPUT RECURS (DTC P2195, P2196, P2197 OR P2198)

(a) Connect an intelligent tester to the DLC3.
(b) Turn the ignition switch ON and the tester ON.
(c) Select the following menu items: DIAGNOSIS / ENHANCED OBD II / DTC INFO / PENDING CODES.
(d) Read DTCs.

Result

Display (DTC Output)	Proceed To
No output	A
P2195, P2196, P2197 or P2198	B

B → REPLACE ECM AND PERFORM CONFIRMATION DRIVING PATTERN

A

19	CONFIRM IF VEHICLE HAS RUN OUT OF FUEL IN PAST

NO → CHECK FOR INTERMITTENT PROBLEMS

YES

DTC CAUSED BY RUNNING OUT OF FUEL

20	REPLACE AIR FUEL RATIO SENSOR

Replace the air fuel ratio sensor (See page EC-21).

NEXT

21	PERFORM CONFIRMATION DRIVING PATTERN

NEXT

22	CHECK WHETHER DTC OUTPUT RECURS (DTC P2195, P2196, P2197 OR P2198)

(a) Connect an intelligent tester to the DLC3.
(b) Turn the ignition switch ON and turn the tester ON.
(c) Select the following menu items: DIAGNOSIS / ENHANCED OBD II / DTC INFO / PENDING CODES.
(d) Read DTCs.

Result

Display (DTC Output)	Proceed To
No output	A
P2195, P2196, P2197 or P2198 (A/F sensor pending DTCs)	B

ES

B → **REPLACE ECM (See page ES-446)**

A

END

DTC	P2238	Oxygen (A/F) Sensor Pumping Current Circuit Low (Bank 1 Sensor 1)
DTC	P2239	Oxygen (A/F) Sensor Pumping Current Circuit High (Bank 1 Sensor 1)
DTC	P2241	Oxygen (A/F) Sensor Pumping Current Circuit Low (Bank 2 Sensor 1)
DTC	P2242	Oxygen (A/F) Sensor Pumping Current Circuit High (Bank 2 Sensor 1)
DTC	P2252	Oxygen (A/F) Sensor Reference Ground Circuit Low (Bank 1 Sensor 1)
DTC	P2253	Oxygen (A/F) Sensor Reference Ground Circuit High (Bank 1 Sensor 1)
DTC	P2255	Oxygen (A/F) Sensor Reference Ground Circuit Low (Bank 2 Sensor 1)
DTC	P2256	Oxygen (A/F) Sensor Reference Ground Circuit High (Bank 2 Sensor 1)

ES

HINT:
- Although the DTC titles say oxygen sensor, these DTCs relate to the Air-Fuel Ratio (A/F) sensor.
- Sensor 1 refers to the sensor mounted in front of the Three-Way Catalytic Converter (TWC) and located near the engine assembly.

DESCRIPTION

Refer to DTC P2195 (See page ES-307).

DTC No.	DTC Detection Conditions	Trouble Areas
P2238 P2241	• Case 1: Condition (a) or (b) continues for 5.0 seconds or more (2 trip detection logic) (a) AF+ voltage 0.5 V or less (b) (AF+) - (AF-) = 0.1 V or less • Case 2: A/F sensor admittance: Less than 0.022 1/Ω (2 trip detection logic)	• Open or short in A/F sensor (bank 1, 2 sensor 1) circuit • A/F sensor (bank 1, 2 sensor 1) • A/F sensor heater • A/F sensor heater relay • A/F sensor heater and relay circuits • ECM
P2239 P2242	AF+ voltage more than 4.5 V for 5.0 seconds or more (2 trip detection logic)	
P2252 P2255	AF- voltage 0.5 V or less for 5.0 seconds or more (2 trip detection logic)	
P2253 P2256	AF- voltage more than 4.5 V for 5.0 seconds or more (2 trip detection logic)	

HINT:
- DTC P2238, P2239, P2252 and P2253 indicate malfunctions related to the bank 1 A/F sensor circuit

- DTC P2241, P2242, P2255 and P2256 indicate malfunctions related to the bank 2 A/F sensor circuit.
- Bank 1 refers to the bank that includes cylinder No. 1.
- Bank 2 refers to the bank that includes cylinder No. 2.

MONITOR DESCRIPTION

The Air-Fuel Ratio (A/F) sensor varies its output voltage in proportion to the air-fuel ratio. If the A/F sensor impedance (alternating current resistance) or voltage output deviates greatly from the standard range, the ECM determines that there is an open or short malfunction in the A/F sensor circuit.

MONITOR STRATEGY

Related DTCs	P2238: A/F sensor (Bank 1) open circuit between AF+ and AF- P2238: A/F sensor (Bank 1) short circuit between AF+ and AF- P2238: A/F sensor (Bank 1) short circuit between AF+ and GND P2239: A/F sensor (Bank 1) short circuit between AF+ and +B P2241: A/F sensor (Bank 2) open circuit between AF+ and AF- P2241: A/F sensor (Bank 2) short circuit between AF+ and AF- P2241: A/F sensor (Bank 2) short circuit between AF+ and GND P2242: A/F sensor (Bank 2) short circuit between AF+ and +B P2252: A/F sensor (Bank 1) short circuit between AF- and GND P2253: A/F sensor (Bank 1) short circuit between AF- and +B P2255: A/F sensor (Bank 2) short circuit between AF- and GND P2256: A/F sensor (Bank 2) short circuit between AF- and +B
Required Sensors/Components (Main)	A/F sensor
Required Sensors/Components (Related)	Engine Coolant Temperature (ECT) sensor, Crankshaft position sensor
Frequency of Operation	Once per driving cycle
Duration	10 seconds: A/F sensor open circuit between AF+ and AF- 5 seconds: Others
MIL Operation	2 driving cycles
Sequence of Operation	None

TYPICAL ENABLING CONDITIONS

Monitor runs whenever following DTCs not present	P0031, P0032, P0051, P0052 (A/F sensor heater - Sensor 1) P0100 - P0103 (MAF meter) P0110 - P0113 (IAT sensor) P0115 - P0118 (ECT sensor) P0120 - P0223, P2135 (TP sensor) P0125 (Insufficient ECT for Closed Loop) P0171, P0172, P0174, P0175 (Fuel system) P0300 - P0306 (Misfire) P0335 (CKP sensor) P0340 (CMP sensor) P0455, P0456 (EVAP system) P0500 (VSS)

P2238 and P2241 (open circuit between AF+ and AF-):

AF+ terminal voltage	0.5 to 4.5 V
AF- terminal voltage	0.5 to 4.5 V
Difference between AF+ and AF- terminal voltages	0.1 to 0.8 V
ECT	5°C (41°F) or more
Engine condition	Running
Fuel-cut	OFF
Time after fuel-cut OFF	5 seconds or more
A/F sensor heater	ON
Battery voltage	11 V or more
Ignition switch	ON
Time after ignition switch is OFF to ON	5 seconds or more

Others:

Battery voltage	11 V or more
Ignition switch	ON
Time after ignition switch is OFF to ON	5 seconds or more

TYPICAL MALFUNCTION THRESHOLDS

P2238 and P2241 (Open circuit between AF+ and AF-):

A/F sensor admittance	Below 0.022 1/Ω

P2238 and P2241 (Short circuit between AF+ and GND):

AF+ terminal voltage	0.5 V or less

P2238 and P2241 (Short circuit between AF+ and AF-):

Difference between AF+ and AF- terminal voltages	0.1 V or less

P2239 and P2242 (Short circuit between AF+ and +B):

AF+ terminal voltage	More than 4.5 V

P2252 and P2255 (Short circuit between AF- and GND):

AF- terminal voltage	0.5 V or less

P2253 and P2256 (Short circuit between AF- and +B):

AF- terminal voltage	More than 4.5 V

WIRING DIAGRAM

Refer to DTC P2195 (See page ES-312).

INSPECTION PROCEDURE

HINT:
Intelligent tester only:
Malfunctioning areas can be identified by performing the A/F CONTROL function provided in the ACTIVE TEST. The A/F CONTROL function can help to determine whether the Air-Fuel Ratio (A/F) sensor, Heated Oxygen (HO2) sensor and other potential trouble areas are malfunctioning.
The following instructions describe how to conduct the A/F CONTROL operation using an intelligent tester.
(1) Connect an intelligent tester to the DLC3.
(2) Start the engine and turn the tester ON.
(3) Warm up the engine at an engine speed of 2,500 rpm for approximately 90 seconds.
(4) Select the following menu items: DIAGNOSIS / ENHANCED OBD II / ACTIVE TEST / A/F CONTROL.
(5) Perform the A/F CONTROL operation with the engine in an idling condition (press the RIGHT or LEFT button to change the fuel injection volume).
(6) Monitor the voltage outputs of the A/F and HO2 sensors (AFS B1S1 and O2S B1S2 or AFS B2S1 and O2S B2S2) displayed on the tester.
HINT:
- The A/F CONTROL operation lowers the fuel injection volume by 12.5 % or increases the injection volume by 25 %.
- Each sensor reacts in accordance with increases and decreases in the fuel injection volume.

Standard

Tester Display (Sensor)	Injection Volumes	Status	Voltages
AFS B1S1 or AFS B2S1 (A/F)	+25 %	Rich	Less than 3.0
AFS B1S1 or AFS B2S1 (A/F)	-12.5 %	Lean	More than 3.35

Tester Display (Sensor)	Injection Volumes	Status	Voltages
O2S B1S2 or O2S B2S2 (HO2)	+25 %	Rich	More than 0.55
O2S B1S2 or O2S B2S2 (HO2)	-12.5 %	Lean	Less than 0.4

NOTICE:
The Air-Fuel Ratio (A/F) sensor has an output delay of a few seconds and the Heated Oxygen (HO2) sensor has a maximum output delay of approximately 20 seconds.

Case	A/F Sensor (Sensor 1) Output Voltage		HO2 Sensor (Sensor 2) Output Voltage		Main Suspected Trouble Areas
1	Injection volume +25 % -12.5 %		Injection volume +25 % -12.5 %		-
	Output voltage More than 3.35 V Less than 3.0 V	OK	Output voltage More than 0.55 V Less than 0.4 V	OK	
2	Injection volume +25 % -12.5 %		Injection volume +25 % -12.5 %		• A/F sensor • A/F sensor heater • A/F sensor circuit
	Output voltage Almost no reaction	NG	Output voltage More than 0.55 V Less than 0.4 V	OK	
3	Injection volume +25 % -12.5 %		Injection volume +25 % -12.5 %		• HO2 sensor • HO2 sensor heater • HO2 sensor circuit
	Output voltage More than 3.35 V Less than 3.0 V	OK	Output voltage Almost no reaction	NG	
4	Injection volume +25 % -12.5 %		Injection volume +25 % -12.5 %		• Injector • Fuel pressure • Gas leakage from exhaust system (Air-fuel ratio extremely lean or rich)
	Output voltage Almost no reaction	NG	Output voltage Almost no reaction	NG	

- Following the A/F CONTROL procedure enables technicians to check and graph the voltage outputs of both the A/F and HO2 sensors.
- To display the graph, select the following menu items on the tester: DIAGNOSIS / ENHANCED OBD II / ACTIVE TEST / A/F CONTROL / USER DATA / AFS B1S1 and O2S B1S2 or AFS B2S1 and O2S B2S2, and press the YES button and then the ENTER button followed by the F4 button.

HINT:
Read freeze frame data using an intelligent tester. Freeze frame data record the engine condition when malfunctions are detected. When troubleshooting, freeze frame data can help determine if the vehicle was moving or stationary, if the engine was warmed up or not, if the air-fuel ratio was lean or rich, and other data, from the time the malfunction occurred.

1	INSPECT AIR FUEL RATIO SENSOR (HEATER RESISTANCE) (See page ES-85)

NG → REPLACE AIR FUEL RATIO SENSOR

OK

2	INSPECT AIR FUEL RATIO SENSOR HEATER RELAY (See page ES-86)

NG → REPLACE AIR FUEL RATIO SENSOR HEATER RELAY

OK

3	CHECK HARNESS AND CONNECTOR (A/F SENSOR - ECM) (See page ES-325)

NG → REPAIR OR REPLACE HARNESS OR CONNECTOR

OK

4	REPLACE AIR FUEL RATIO SENSOR

Replace the air fuel ratio sensor (See page EC-21).

NEXT

5	CHECK WHETHER DTC OUTPUT RECURS (DTC P2238, P2239, P2252 OR P2253)

(a) Connect the intelligent tester to the DLC3.
(b) Turn the ignition switch ON and turn the tester ON.
(c) Clear DTCs (See page ES-38).
(d) Start the engine.
(e) Allow the engine to idle for 5 minutes or more.
(f) Select the following menu items: DIAGNOSIS / ENHANCED OBD II / DTC INFO / PENDING CODES.
(g) Read pending DTCs.

Result

Display (DTC Output)	Proceed To
No output	A
P2238, P2239, P2252 or P2253	B

B → REPLACE ECM (See page ES-446)

A

END

DTC	P2401	Evaporative Emission Leak Detection Pump Stuck OFF

DTC	P2402	Evaporative Emission Leak Detection Pump Stuck ON

DTC SUMMARY

DTCs	Monitoring Items	Malfunction Detection Conditions	Trouble Areas	Detection Timings	Detection Logic
P2401	Leak detection pump stuck OFF	P043E, P043F, P2401, P2402 and P2419 present when one of following conditions met during key-off EVAP monitor: • EVAP pressure just after reference pressure measurement greater than -1 kPa-g (-7.5 mmHg-g) • Reference pressure less than -4.85 kPa-g (-36.4 mmHg-g) • Reference pressure greater than -1.057 kPa-g (-7.93 mmHg-g) • Reference pressure not saturated • Reference pressure difference between first and second 0.7 kPa-g (5.25 mmHg-g) or more HINT: Typical example values	• Canister pump module (Reference orifice, leak detection pump, vent valve) • Connector/wire harness (Canister pump module - ECM) • EVAP system hose (pipe from air inlet port to canister pump module, canister filter, fuel tank vent hose) • ECM	While ignition switch OFF	2 trip
P2402	Leak detection pump stuck ON		• Canister pump module (Reference orifice, leak detection pump, vent valve) • Connector/wire harness (Canister pump module - ECM) • EVAP system hose (pipe from air inlet port to canister pump module, canister filter, fuel tank vent hose) • ECM	While ignition switch OFF	2 trip

HINT:
The leak detection pump is built into the canister pump module.

DESCRIPTION

The description can be found in the EVAP (Evaporative Emission) System (See page ES-352).

INSPECTION PROCEDURE

Refer to the EVAP System (See page ES-357).

MONITOR DESCRIPTION

5 hours* after the ignition switch is turned to OFF, the leak detection pump creates negative pressure (vacuum) in the EVAP system. The ECM monitors for leaks and actuator malfunctions based on the EVAP pressure.
HINT:
*: If the engine coolant temperature is not below 35°C (95°F) 5 hours after the ignition switch is turned to OFF, the monitor check starts 2 hours later. If it is still not below 35°C (95°F) 7 hours after the ignition switch is turned to OFF, the monitor check starts 2.5 hours later.

Sequence	Operations	Descriptions	Duration
-	ECM activation	Activated by soak timer, 5 hours (7 or 9.5 hours) after ignition switch turned to OFF.	-

Sequence	Operations	Descriptions	Duration
A	Atmospheric pressure measurement	Vent valve turned OFF (vent) and EVAP system pressure measured by ECM in order to register atmospheric pressure. If pressure in EVAP system not between 70 kPa-a and 110 kPa-a (525 mmHg-a and 825 mmHg-a), ECM cancels EVAP system monitor.	10 seconds
B	First reference pressure measurement	In order to determine reference pressure, leak detection pump creates negative pressure (vacuum) through reference orifice and then ECM checks if leak detection pump and vent valve operate normally.	60 seconds
C	EVAP system pressure measurement	Vent valve turned ON (closed) to shut EVAP system. Negative pressure (vacuum) created in EVAP system, and EVAP system pressure then measured. Write down measured value as will be used in leak check. If EVAP pressure does not stabilize within 15 minutes, ECM cancels EVAP system monitor.	15 minutes*
D	Purge VSV monitor	Purge VSV opened and then EVAP system pressure measured by ECM. Large increase indicates normality.	10 seconds
E	Second reference pressure measurement	After second reference pressure measurement, leak check performed by comparing first and second reference pressure. If stabilized system pressure higher than second reference pressure, ECM determines that EVAP system leaking.	60 seconds
F	Final check	Atmospheric pressure measured and then monitoring result recorded by ECM.	-

* If only a small amount of fuel is in the fuel tank, it takes longer for the EVAP pressure to stabilize.

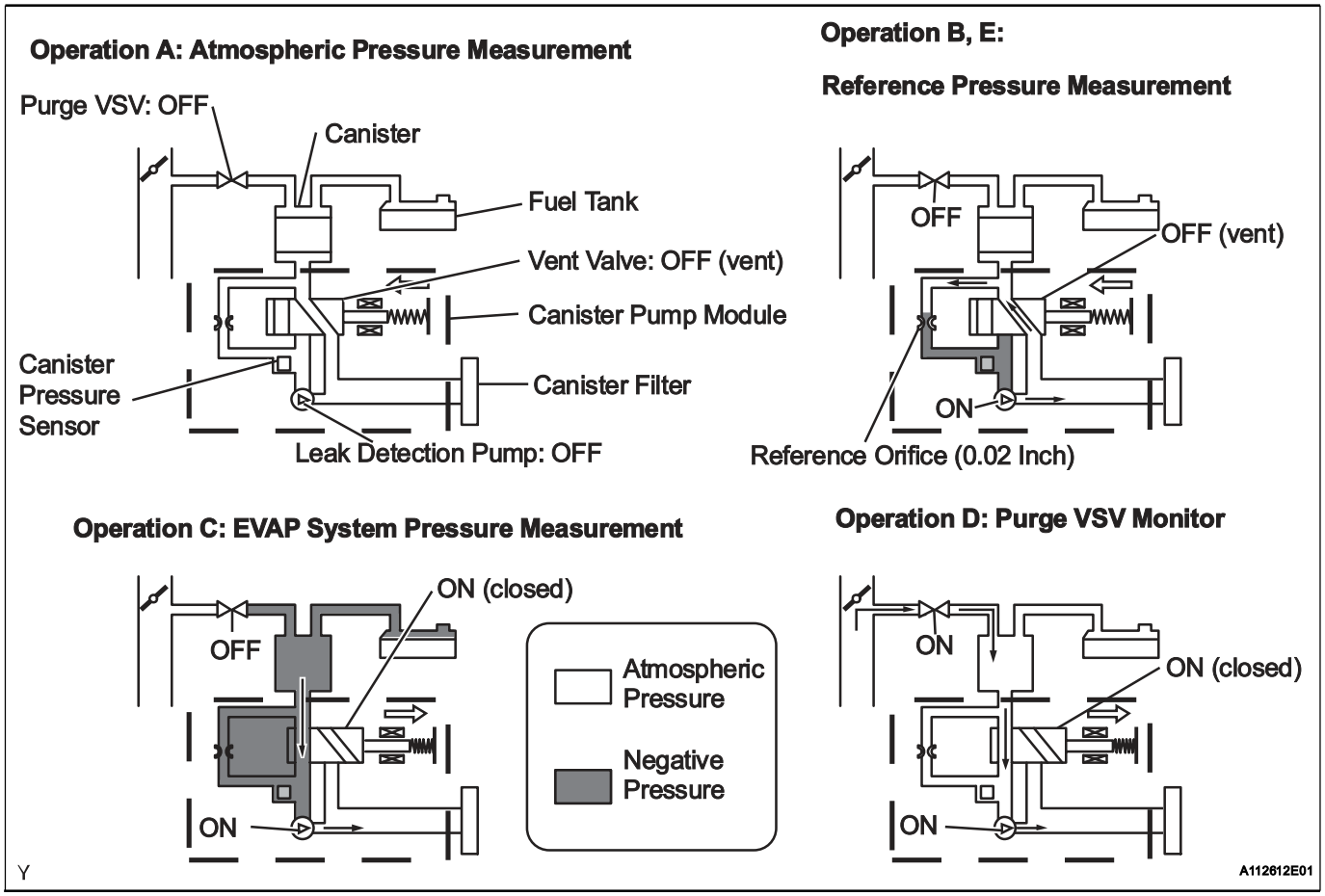

1. P2401: Leak detection pump stuck OFF
   In operation B, the leak detection pump creates negative pressure (a vacuum) through the reference orifice. The EVAP system pressure is then measured by the ECM, using the canister pressure sensor, to determine the reference pressure. If the pressure is higher than -1.057 kPa-g (-7.93 mmHg-g), or lower than -4.85 kPa-g (-36.4 mmHg-g), the ECM interprets this as the leak detection pump being stuck OFF (not operating). The ECM illuminates the MIL and sets the DTC (2 trip detection logic).

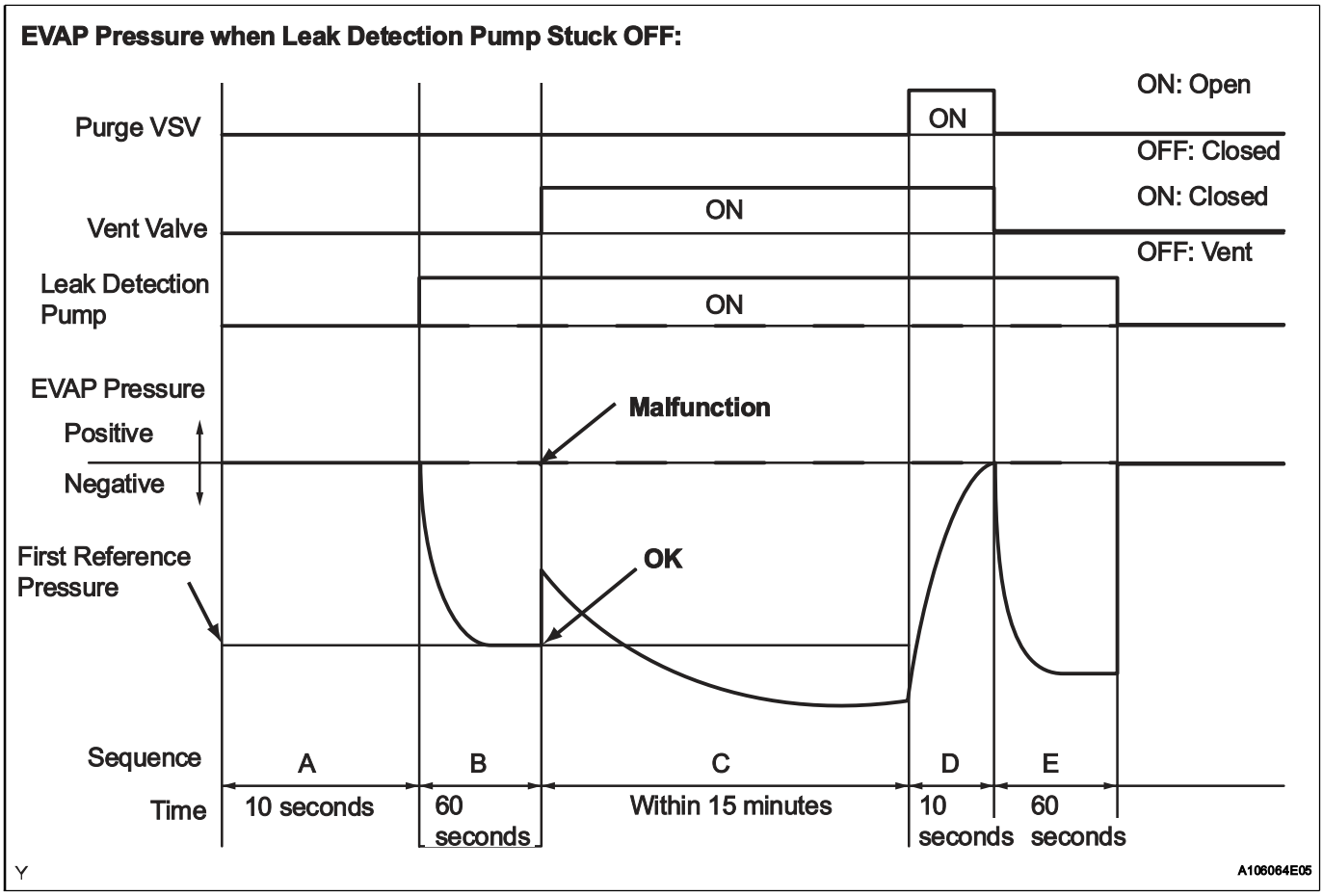

2. P2402: Leak detection pump stuck ON
   In operation B, the leak detection pump creates negative pressure (a vacuum) through the reference orifice. The EVAP (Evaporative Emission) system pressure is then measured by the ECM, using the canister pressure sensor, to determine the reference pressure. If the pressure is higher than -1.057 kPa-g (-7.93 mmHg-g), or lower than -4.85 kPa-g (-36.4 mmHg-g), the ECM interprets this as the leak detection pump being stuck ON (remaining ON all the time). The ECM illuminates the MIL and sets the DTC (2 trip detection logic).

EVAP Pressure when Leak Detection Pump Stuck ON:

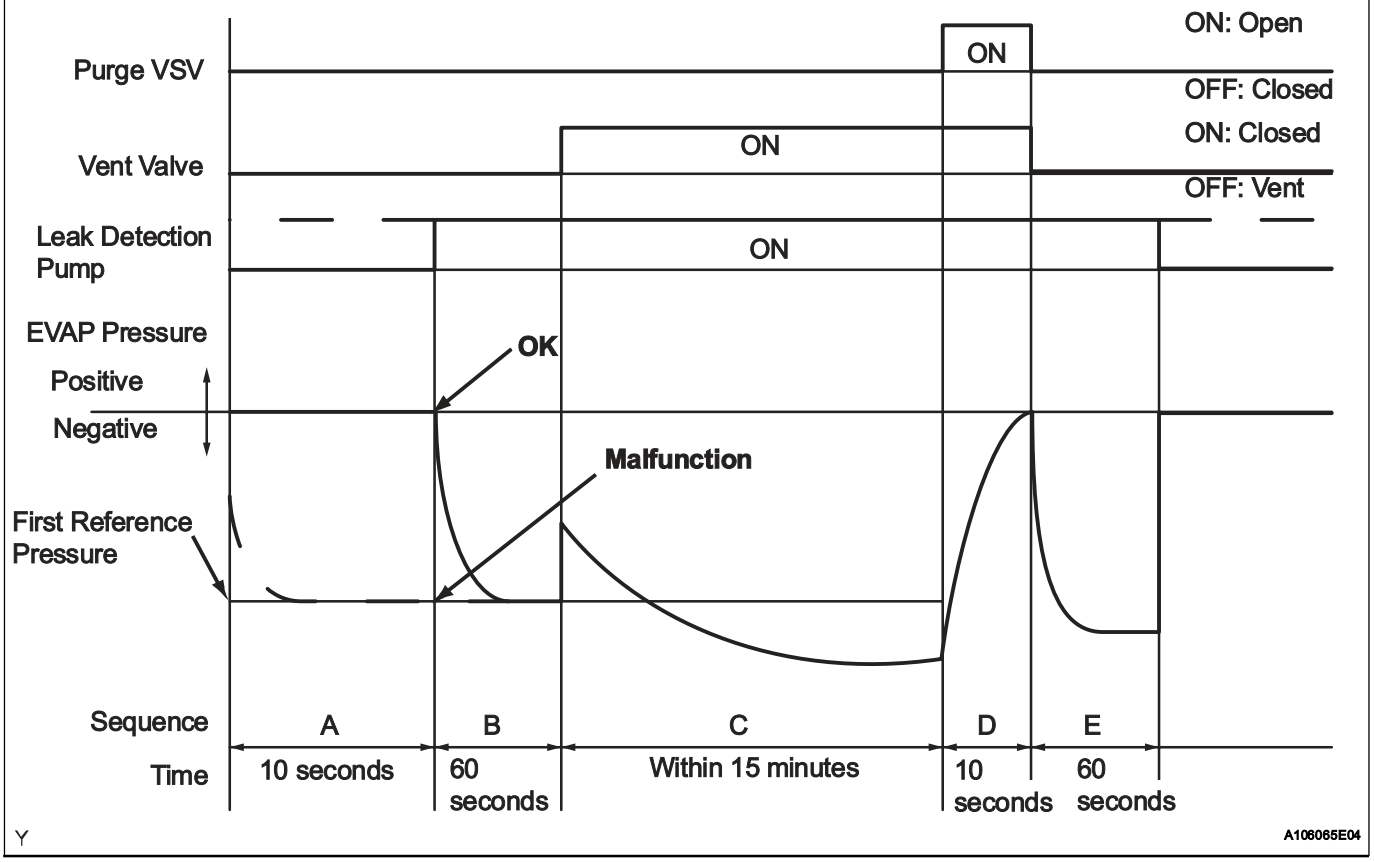

HINT:
The detection logic of DTCs P2401 and P2402 is the same because in both cases the reference pressure measured in operation B is compared to the atmospheric pressure registered in operation A. The ECM calculates the difference between these pressures by deducting [the reference pressure] from [the stored atmospheric pressure], and uses this to monitor the EVAP system pressure change.

MONITOR STRATEGY

Required Sensors/Components	Purge VSV and canister pump module
Frequency of Operation	Once per driving cycle
Duration	Within 2 minutes (varies with amount of fuel in tank)
MIL Operation	2 driving cycles
Sequence of Operation	None

TYPICAL ENABLING CONDITIONS

Monitor runs whenever following DTCs not present	None
EVAP key-off monitor runs when all of following conditions met	-
Atmospheric pressure	70 to 110 kPa-a (525 to 825 mmHg-a)
Battery voltage	10.5 V or more

Vehicle speed	Below 2.5 mph (4 km/h)
Ignition switch	OFF
Time after key off	5 or 7 or 9.5 hours
Canister pressure sensor malfunction (P0450, P0451, P0452 and P0453)	Not detected
Purge VSV	Not operated by scan tool
Vent valve	Not operated by scan tool
Leak detection pump	Not operated by scan tool
Both of following conditions met before key off	Conditions 1 and 2
1. Duration that vehicle driven	5 minutes or more
2. EVAP purge operation	Performed
ECT	4.4° to 35°C (40° to 95°F)
IAT	4.4°to 35°C (40° to 95°F)

ES

1. Key-off monitor sequence 1 to 8

1. Atmospheric pressure measurement

Next sequence run if following condition set	-
Atmospheric pressure change	Less than 0.3 kPa-g (2.25 mmHg-g) in 1 second

2. First reference pressure measurement

Next sequence run if all of following conditions set	Condition 1, 2 and 3
1. EVAP pressure just after reference pressure measurement start	-1 kPa-g (-7.5 mmHg-g) or less
2. Reference pressure	-4.85 to -1.057 kPa-g (-36.4 to -7.93 mmHg-g)
3. Reference pressure	Saturated within 60 seconds

3. Vent valve stuck closed check

Next sequence run if following condition set	-
EVAP pressure change after vent valve ON (closed)	0.3 kPa-g (2.25 mmHg-g) or more

4. Vacuum introduction

Next sequence run if following condition set	-
EVAP pressure	Saturated within 15 minutes

5. Purge VSV stuck closed check

Next sequence run if following condition set	-
EVAP pressure change after purge VSV ON (open)	0.3 kPa-g (2.25 mmHg-g) or more

6. Second reference pressure measurement

Next sequence run if all of following conditions set	Condition 1, 2, 3 and 4
1. EVAP pressure just after reference pressure	-1 kPa-g (-7.5 mmHg-g) or less
2. Reference pressure	-4.85 to -1.057 kPa-g (-36.4 to -7.93 mmHg-g)
3. Reference pressure	Saturated within 60 seconds
4. Reference pressure difference between first and second	Less than 0.7 kPa-g (5.25 mmHg-g)

7. Leak check

Next sequence run if following condition set	-
EVAP pressure when vacuum introduction complete	Second reference pressure or less

8. Atmospheric pressure measurement

EVAP monitor complete if following condition set	-
Atmospheric pressure difference between sequence 1 and 8	Within 0.3 kPa-g (2.25 mmHg-g)

TYPICAL MALFUNCTION THRESHOLDS

"Saturated" indicates that the EVAP pressure change is less than 0.286 kPa-g (2.14 mmHg-g) in 60 seconds.

One of following conditions met	-
EVAP pressure just after reference pressure measurement start	More than -1 kPa-g (-7.5 mmHg-g)
Reference pressure	Less than -4.85 kPa-g (-36.4 mmHg-g)
Reference pressure	-1.057 kPa-g (-7.93 mmHg-g) or more
Reference pressure	Not saturated within 60 seconds
Reference pressure difference between first and second	0.7 kPa-g (5.25 mmHg-g) or more

MONITOR RESULT

Refer to CHECKING MONITOR STATUS (See page ES-20).

DTC	P2419	Evaporative Emission System Switching Valve Control Circuit Low

DTC	P2420	Evaporative Emission System Switching Valve Control Circuit High

DTC SUMMARY

DTCs	Monitoring Items	Malfunction Detection Conditions	Trouble Areas	Detection Timings	Detection Logic
P2419	Vent valve stuck closed	P043E, P043F, P2401, P2402 and P2419 present when one of following conditions met during key-off EVAP monitor: • EVAP pressure just after reference pressure measurement greater than -1 kPa-g (-7.5 mmHg-g) • Reference pressure less than -4.85 kPa-g (-36.4 mmHg-g) • Reference pressure greater than -1.057 kPa-g (-7.93 mmHg-g) • Reference pressure not saturated • Reference pressure difference between first and second 0.7 kPa-g (5.25 mmHg-g) or more HINT: Typical example values	• Canister pump module (Reference orifice, leak detection pump, vent valve) • Connector/wire harness (Canister pump module - ECM) • EVAP system hose (pipe from air inlet port to canister pump module, canister filter, fuel tank vent hose) • ECM	While ignition switch OFF	2 trip
P2420	Vent valve stuck open (vent)	Following condition met during key-off EVAP monitor: • EVAP pressure change when vent valve closed (ON) less than 0.3 kPa-g (2.25 mmHg-g)	• Canister pump module (Reference orifice, leak detection pump, vent valve) • Connector/wire harness (Canister pump module - ECM) • ECM	While ignition switch OFF	2 trip

HINT:
The vent valve is built into the canister pump module.

DESCRIPTION

The description can be found in the EVAP (Evaporative Emission) System (See page ES-352).

INSPECTION PROCEDURE

Refer to the EVAP System (See page ES-357).

MONITOR DESCRIPTION

5 hours* after the ignition switch is turned to OFF, the leak detection pump creates negative pressure (vacuum) in the EVAP system. The ECM monitors for leaks and actuator malfunctions based on the EVAP pressure.
HINT:
*: If the engine coolant temperature is not below 35°C (95°F) 5 hours after the ignition switch is turned to OFF, the monitor check starts 2 hours later. If it is still not below 35°C (95°F) 7 hours after the ignition switch is turned to OFF, the monitor check starts 2.5 hours later.

Sequence	Operations	Descriptions	Duration
-	ECM activation	Activated by soak timer, 5 hours (7 or 9.5 hours) after ignition switch turned to OFF.	-

Sequence	Operations	Descriptions	Duration
A	Atmospheric pressure measurement	Vent valve turned OFF (vent) and EVAP system pressure measured by ECM in order to register atmospheric pressure. If pressure in EVAP system not between 70 kPa-a and 110 kPa-a (525 mmHg-a and 825 mmHg-a), ECM cancels EVAP system monitor.	10 seconds
B	First reference pressure measurement	In order to determine reference pressure, leak detection pump creates negative pressure (vacuum) through reference orifice and then ECM checks if leak detection pump and vent valve operate normally.	60 seconds
C	EVAP system pressure measurement	Vent valve turned ON (closed) to shut EVAP system. Negative pressure (vacuum) created in EVAP system, and EVAP system pressure then measured. Write down measured value as will be used in leak check. If EVAP pressure does not stabilize within 15 minutes, ECM cancels EVAP system monitor.	15 minutes*
D	Purge VSV monitor	Purge VSV opened and then EVAP system pressure measured by ECM. Large increase indicates normality.	10 seconds
E	Second reference pressure measurement	After second reference pressure measurement, leak check performed by comparing first and second reference pressure. If stabilized system pressure higher than second reference pressure, ECM determines that EVAP system leaking.	60 seconds
F	Final check	Atmospheric pressure measured and then monitoring result recorded by ECM.	-

* If only a small amount of fuel is in the fuel tank, it takes longer for the EVAP pressure to stabilize.

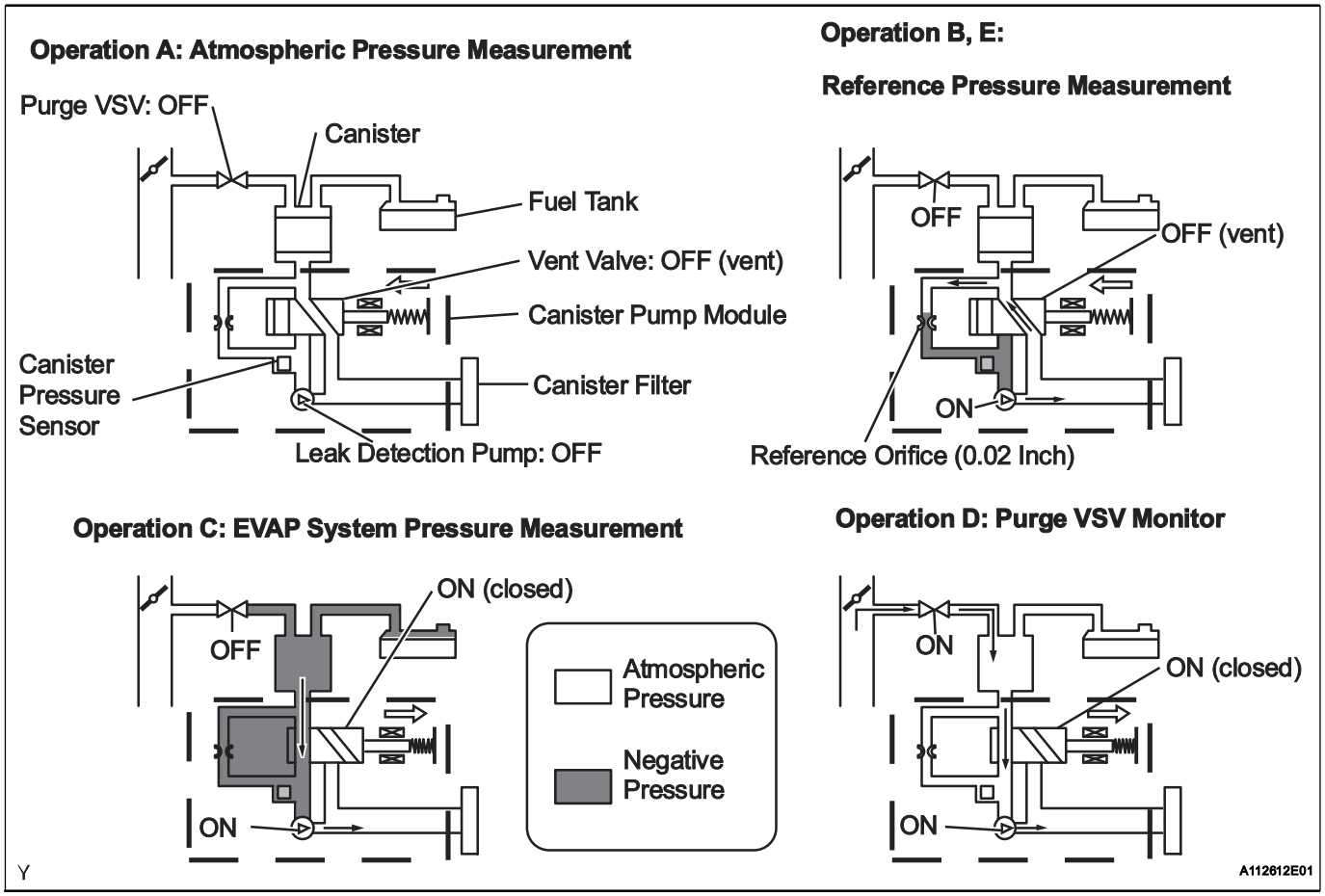

1. P2419: Vent valve stuck closed
   In operation B, the leak detection pump creates negative pressure (a vacuum) through the reference orifice. The EVAP system pressure is then measured by the ECM, using the canister pressure sensor, to determine the reference pressure. If the pressure exceeds -1.057 kPa-g (-7.93 mmHg-g) 4 seconds after the leak detection pump is turned ON, the ECM interprets this as the vent valve being stuck closed.
   The ECM illuminates the MIL and sets the DTC (2 trip detection logic).

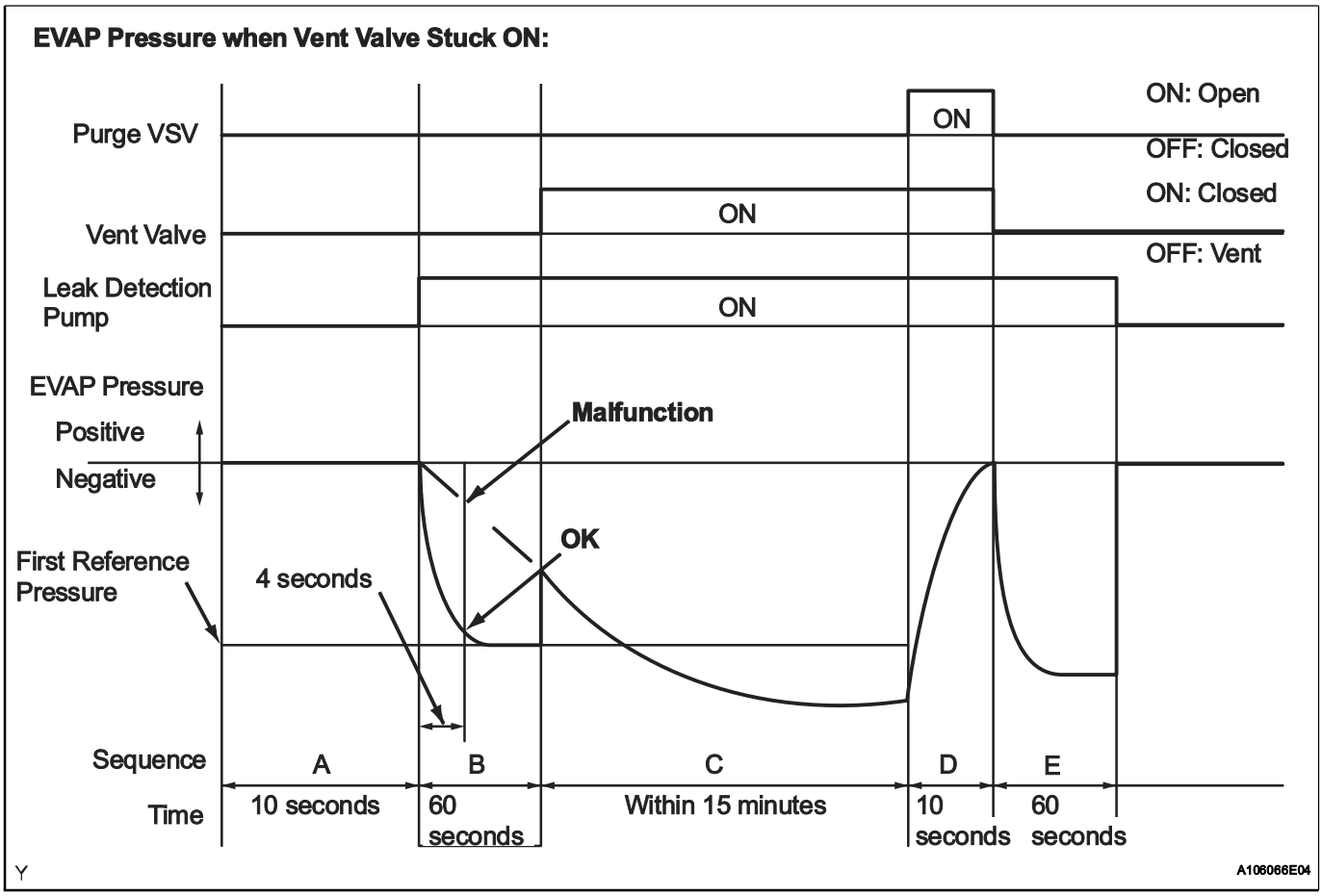

2. P2420: Vent valve stuck open (vent)
   In operation C, the vent valve turns ON (closes) and the EVAP system pressure is then measured by the ECM, using the canister pressure sensor, to conduct an EVAP leak check. If the pressure does not increase when the vent valve is open, the ECM interprets this as the vent valve being stuck open. The ECM illuminates the MIL and sets the DTC.

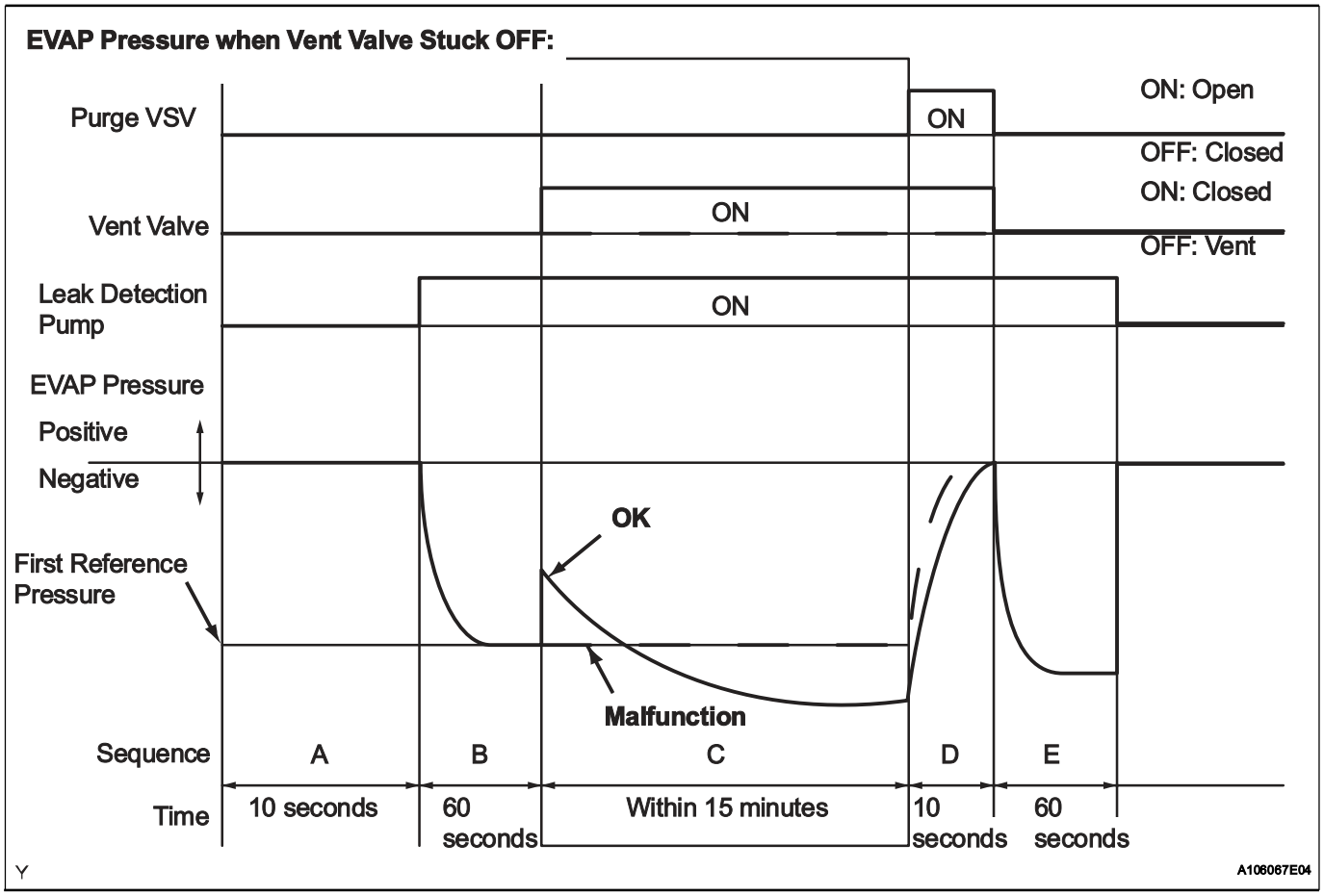

MONITOR STRATEGY

Required Sensors/Components	Purge VSV and canister pump module
Frequency of Operation	Once per driving cycle
Duration	Within 15 minutes (varies with amount of fuel in tank)
MIL Operation	2 driving cycles
Sequence of Operation	None

TYPICAL ENABLING CONDITIONS

Monitor runs whenever following DTCs not present	None
EVAP key-off monitor runs when all of following conditions met	-
Atmospheric pressure	70 to 110 kPa-a (525 to 825 mmHg-a)
Battery voltage	10.5 V or more
Vehicle speed	Below 2.5 mph (4 km/h)
Ignition switch	OFF
Time after key off	5 or 7 or 9.5 hours
Canister pressure sensor malfunction (P0450, P0451, P0452 and P0453)	Not detected
Purge VSV	Not operated by scan tool
Vent valve	Not operated by scan tool

Leak detection pump	Not operated by scan tool
Both of following conditions met before key off	Conditions 1 and 2
1. Duration that vehicle driven	5 minutes or more
2. EVAP purge operation	Performed
ECT	4.4° to 35°C (40° to 95°F)
IAT	4.4°to 35°C (40° to 95°F)

1. Key-off monitor sequence 1 to 8

1. Atmospheric pressure measurement

Next sequence run if following condition set	-
Atmospheric pressure change	Less than 0.3 kPa-g (2.25 mmHg-g) in 1 second

2. First reference pressure measurement

ES

Next sequence run if all of following conditions set	Condition 1, 2 and 3
1. EVAP pressure just after reference pressure measurement start	-1 kPa-g (-7.5 mmHg-g) or less
2. Reference pressure	-4.85 to -1.057 kPa-g (-36.4 to -7.93 mmHg-g)
3. Reference pressure	Saturated within 60 seconds

3. Vent valve stuck closed check

Next sequence run if following condition set	-
EVAP pressure change after vent valve ON (closed)	0.3 kPa-g (2.25 mmHg-g) or more

4. Vacuum introduction

Next sequence run if following condition set	-
EVAP pressure	Saturated within 15 minutes

5. Purge VSV stuck closed check

Next sequence run if following condition set	-
EVAP pressure change after purge VSV ON (open)	0.3 kPa-g (2.25 mmHg-g) or more

6. Second reference pressure measurement

Next sequence run if all of following conditions set	Condition 1, 2, 3 and 4
1. EVAP pressure just after reference pressure	-1 kPa-g (-7.5 mmHg-g) or less
2. Reference pressure	-4.85 to -1.057 kPa-g (-36.4 to -7.93 mmHg-g)
3. Reference pressure	Saturated within 60 seconds
4. Reference pressure difference between first and second	Less than 0.7 kPa-g (5.25 mmHg-g)

7. Leak check

Next sequence run if following condition set	-
EVAP pressure when vacuum introduction complete	Second reference pressure or less

8. Atmospheric pressure measurement

EVAP monitor complete if following condition set	-
Atmospheric pressure difference between sequence 1 and 8	Within 0.3 kPa-g (2.25 mmHg-g)

TYPICAL MALFUNCTION THRESHOLDS

"Saturated" indicates that the EVAP pressure change is less than 0.286 kPa-g (2.14 mmHg-g) in 60 seconds.

P2419: Vent valve stuck closed

One of following conditions set	-
EVAP pressure just after reference pressure measurement start	More than -1 kPa-g (-7.5 mmHg-g)
Reference pressure	Less than -4.85 kPa-g (-36.4 mmHg-g)
Reference pressure	-1.057 kPa-g (-7.93 mmHg-g) or more
Reference pressure	Not saturated within 60 seconds

Reference pressure difference between first and second	0.7 kPa-g (5.25 mmHg-g) or more

P2420: Vent valve stuck open (vent)

EVAP pressure change after EVAP canister vent valve ON	Less than 0.3 kPa-g (2.25 mmHg-g)

MONITOR RESULT

Refer to CHECKING MONITOR STATUS (See page ES-20).

DTC	P2610	ECM / PCM Internal Engine Off Timer Performance

DTC SUMMARY

DTC	Monitoring Items	Malfunction Detection Conditions	Trouble Areas	Detection Timings	Detection Logic
P2610	Soak timer (built into ECM)	ECM internal malfunction	ECM	Engine running	2 trip

DESCRIPTION

ES

To ensure the accuracy of the EVAP (Evaporative Emission) monitor values, the soak timer, which is built into the ECM, measures 5 hours (+-15 minutes) from when the ignition switch is turned OFF, before the monitor is run. This allows the fuel to cool down, which stabilizes the EVAP pressure. When 5 hours have elapsed, the ECM turns on.

Soak Timer Circuit:

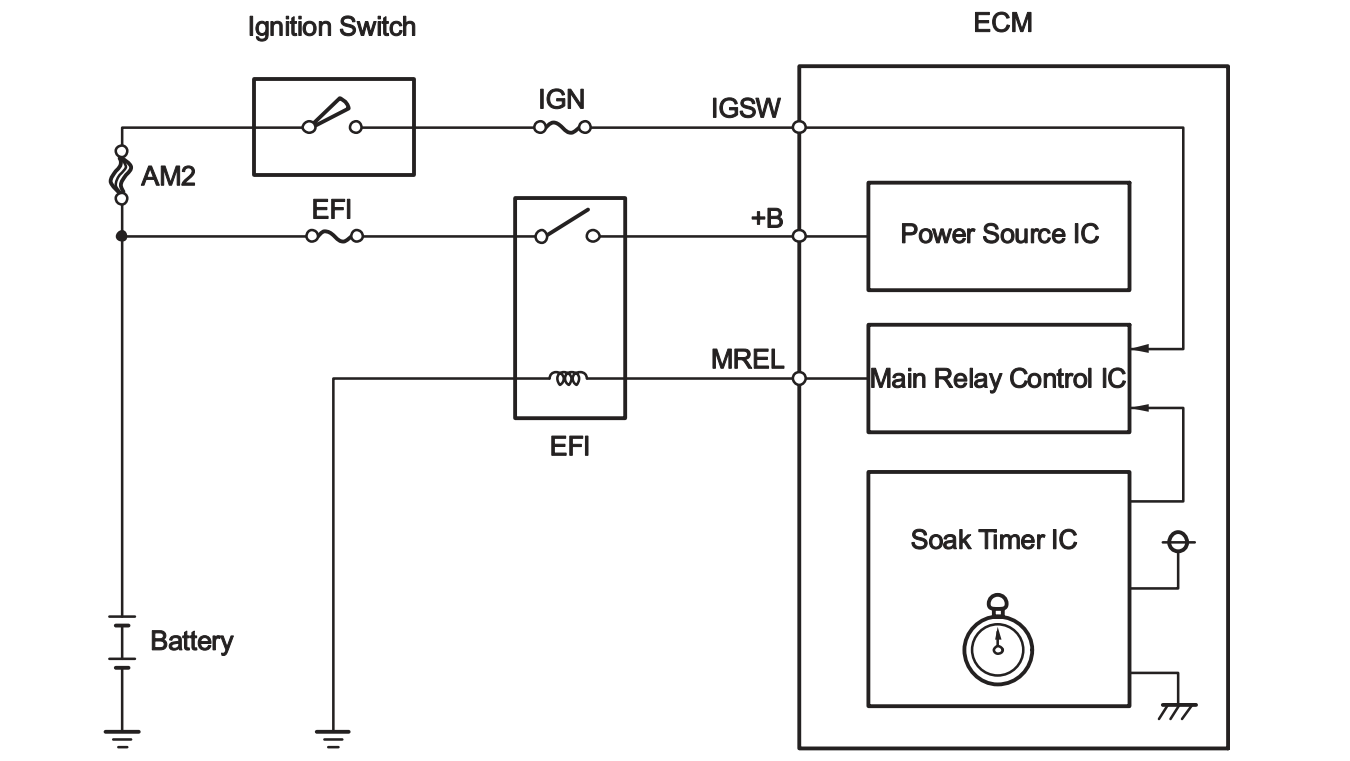

MONITOR DESCRIPTION

5 hours after the ignition switch is turned OFF, the soak timer activates the ECM to begin the EVAP system monitor. While the engine is running, the ECM monitors the synchronization of the soak timer and the CPU clock. If these two are not synchronized, the ECM interprets this as a malfunction, illuminates the MIL and sets the DTC (2 trip detection logic).

MONITOR STRATEGY

Required Sensors/Components	ECM
Frequency of Operation	Once per driving cycle

Duration	10 minutes
MIL Operation	2 driving cycles
Sequence of Operation	None

TYPICAL ENABLING CONDITIONS

Monitor runs whenever following DTC not present	None
Ignition switch	ON
Engine	Running
Battery voltage	8 V or more
Starter	OFF

TYPICAL MALFUNCTION THRESHOLDS

Soak timer measurement when ECM CPU clock counts 10 minutes	Less than 7 minutes, or more than 13 minutes

INSPECTION PROCEDURE

HINT:

- DTC P2610 is set if an internal ECM problem is detected. Diagnostic procedures are not required. ECM replacement is necessary.
- Read freeze frame data using an intelligent tester. Freeze frame data record the engine condition when malfunctions are detected. When troubleshooting, freeze frame data can help determine if the vehicle was moving or stationary, if the engine was warmed up or not, if the air-fuel ratio was lean or rich, and other data, from the time the malfunction occurred.

1	REPLACE ECM

(a) Replace the ECM (See page ES-446).

NEXT

2	CHECK WHETHER DTC OUTPUT RECURS (DTC P2610)

(a) Connect an intelligent tester to the DLC3.
(b) Turn the ignition switch ON.
(c) Turn the tester ON.
(d) Clear DTCs (See page ES-38).
(e) Start the engine and wait for 10 minutes or more.
(f) Select the following menu items: DIAGNOSIS / ENHANCED OBD II / DTC / INFO / PENDING CODES.
(g) If no pending DTC is displayed, the repair has been successfully completed.

NEXT

END

DTC	P2A00	A/F Sensor Circuit Slow Response (Bank 1 Sensor 1)

DTC	P2A03	A/F Sensor Circuit Slow Response (Bank 2 Sensor 1)

HINT:
- DTC P2A00 indicates malfunctions related to the bank 1 A/F sensor.
- DTC P2A03 indicates malfunctions related to the bank 2 A/F sensor.
- Bank 1 refers to the bank that includes cylinder No. 1.
- Bank 2 refers to the bank that includes cylinder No. 2.
- Sensor 1 refers to the sensor mounted in front of the Three-Way Catalytic Converter (TWC) and located near the engine assembly.

ES

DESCRIPTION

Refer to DTC P2195 (See page ES-307).

DTC No.	DTC Detection Conditions	Trouble Areas
P2A00 P2A03	Calculated value for air-fuel ratio (A/F) sensor response rate deterioration level is less than threshold	• Open or short in A/F sensor (bank 1, 2 sensor 1) circuit • A/F sensor • A/F sensor heater • ECM

MONITOR DESCRIPTION

After engine is warmed up, the ECM performs air-fuel ratio feedback control to maintain the air-fuel ratio at the stoichiometric level. In addition, active A/F control is performed for approximately 10 seconds after preconditions are met in order to measure the A/F sensor response rate. During active A/F control, the ECM forcibly increases and decreases the injection volume a certain amount, based on the stoichiometric air-fuel ratio learned during normal air-fuel ratio control, and measures the A/F sensor response rate. The ECM receives a signal from the A/F sensor while performing active A/F control and uses it to calculate the A/F sensor response rate deterioration level.
If the value for A/F sensor response rate deterioration level is less than the threshold, the ECM interprets this as a malfunction and sets the DTC.

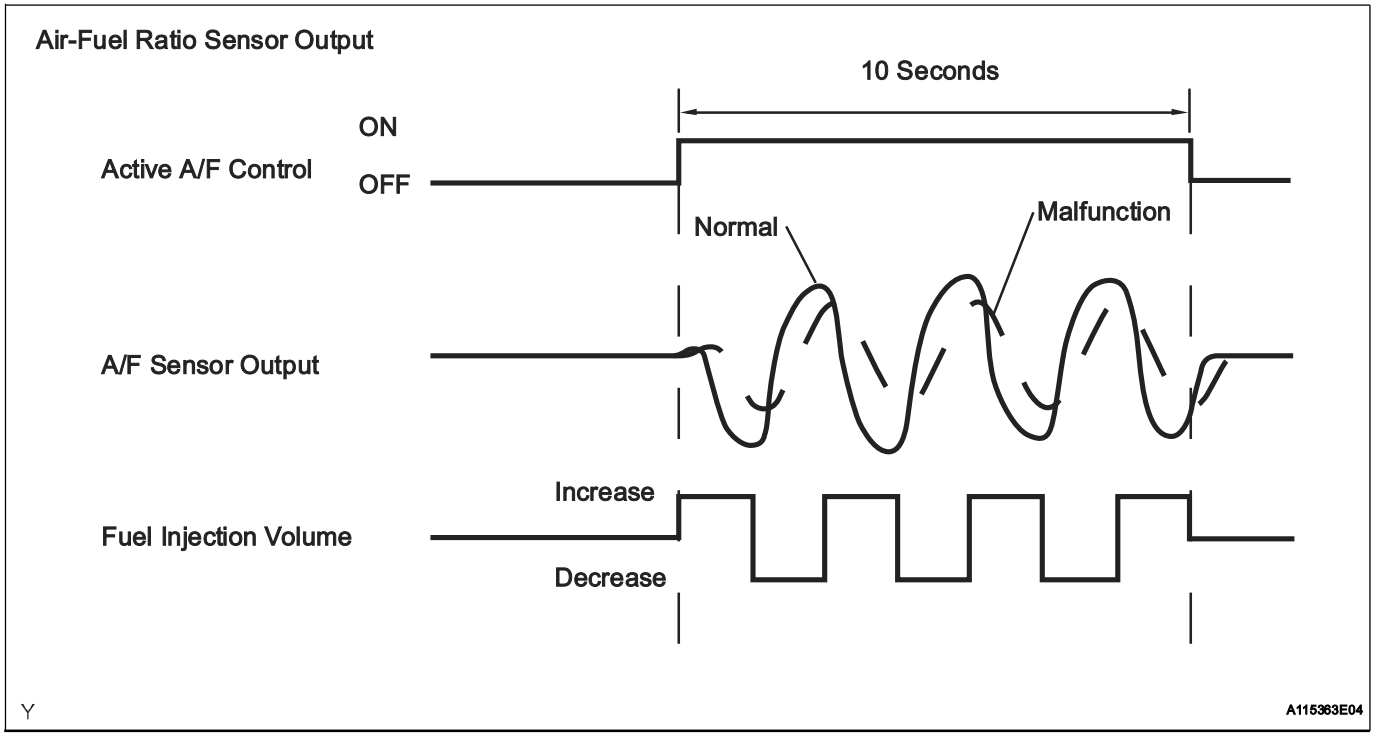

CONFIRMATION DRIVING PATTERN

HINT:

Performing this confirmation pattern will activate the A/F sensor response monitor.

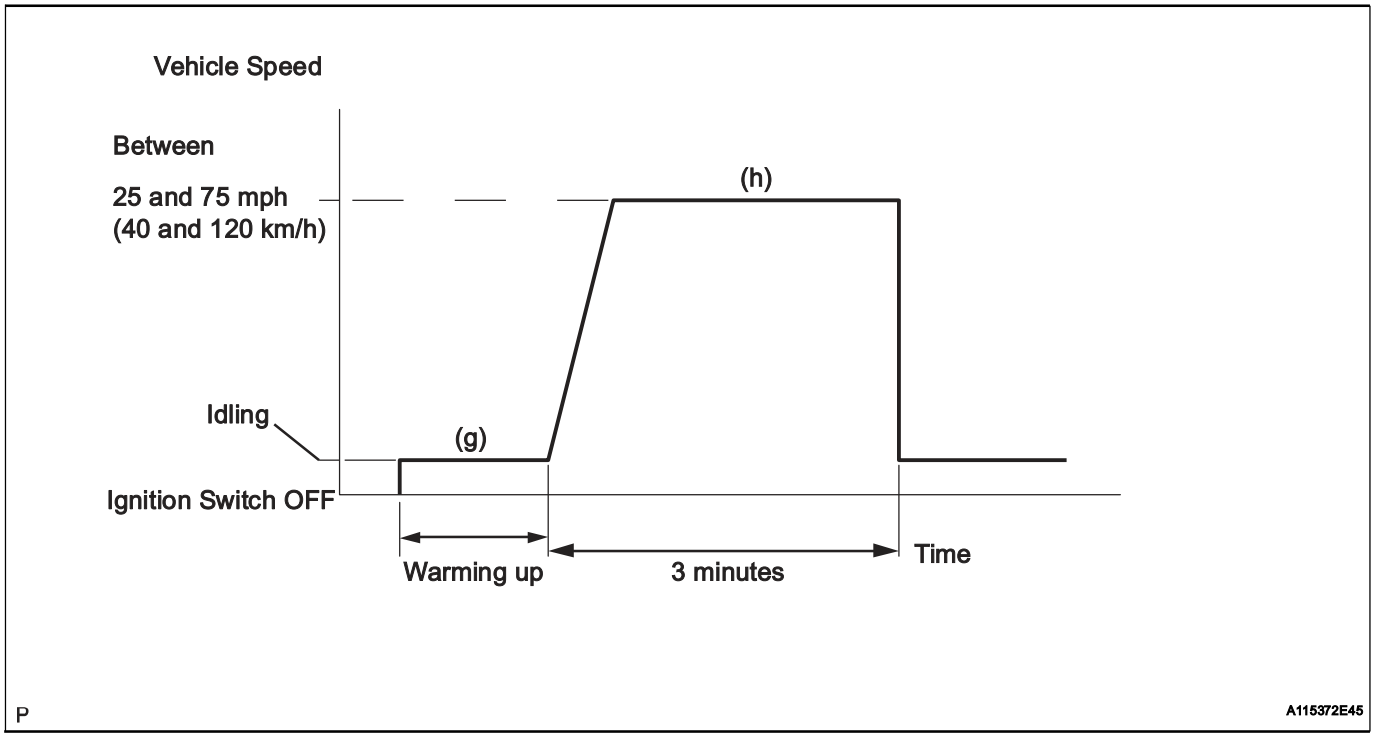

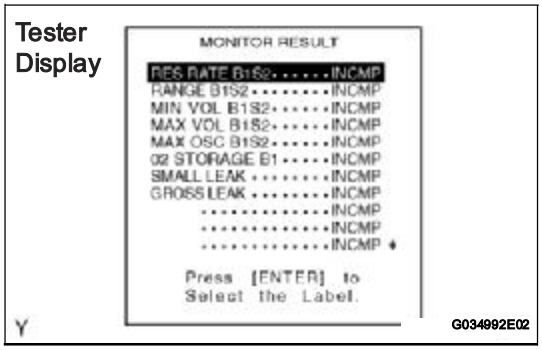

(a) Connect an intelligent tester to the DLC3.
(b) Turn the ignition switch ON.
(c) Turn the tester ON.
(d) Clear DTCs (See page ES-38).
(e) Select the following menu items: DIAGNOSIS /ENHANCED OBD II / MONITOR INFO / MONITOR RESULT.
(f) Check that RES RATE B1S1 and RES RATE B2S1 are INCOMPL.
(g) Start the engine and warm it up.
(h) Drive the vehicle at between 25 mph and 75 mph (40 km/h and 120 km/h) for 3 minutes. However, the vehicle should be driven at a constant speed.
(i) Check the monitor result values on an intelligent tester by selecting the following menu items: DIAGNOSIS / ENHANCED OBD II / MONITOR INFO / MONITOR RESULT / RES RATE B1S1 and RES RATE B2S1.
(j) If the values indicated on the tester do not change, perform READINESS MONITOR DRIVE PATTERN for the A/F sensor and the heated oxygen sensor (See page ES-23).
HINT:
Completion of all A/F sensor monitors is required to change the value in RES RATE B1S1 and RES RATE B2S1.
(k) Note the value of the RES RATE B1S1 and RES RATE B2S1.
(l) Select the following menu items: DIAGNOSIS / ENHANCED OBD II / DTC INFO / PENDING CODES.
(m) Check if any DTCs (any pending DTCs) are set.

MONITOR STRATEGY

Related DTCs	P2A00: A/F sensor (Bank 1) slow response P2A03: A/F sensor (Bank 2) slow response
Required Sensors/Components (Main)	A/F sensor
Required Sensors/Components (Related)	Vehicle speed sensor, Crankshaft position sensor
Frequency of Operation	Once per driving cycle
Duration	10 to 15 seconds
MIL Operation	2 driving cycles
Sequence of Operation	None

TYPICAL ENABLING CONDITIONS

Monitor runs whenever following DTCs not present	P0031, P0032, P0051, P0052 (A/F sensor heater - Sensor 1) P0100 - P0103 (MAF meter) P0110 - P0113 (IAT sensor) P0115 - P0118 (ECT sensor) P0120 - P0223, P2135 (TP sensor) P0125 (Insufficient ECT for Closed Loop) P0171, P0172 (Fuel system) P0300 - P0306 (Misfire) P0335 (CKP sensor) P0340, P0341 (CMP sensor) P0455, P0456 (EVAP system) P0500 (VSS) P2196, P2198 (A/F sensor - rationality)
Active A/F control	Performing
Active A/F control performed when following conditions met	-
Battery voltage	11 V or more
Engine coolant temperature	75°C (167°F) or more
Idling	OFF
Engine RPM	Less than 4,000 rpm
A/F sensor status	Activated
Fuel-cut	OFF
Engine load	10 to 70 %
Shift position	2 or more
Catalyst monitor	Not yet
Intake air amount	3 to 10.5 g/sec

ES

TYPICAL MALFUNCTION THRESHOLDS

Response rate deterioration level	Less than 0.2 V

MONITOR RESULT

Refer to CHECKING MONITOR STATUS (See page ES-20).

WIRING DIAGRAM

Refer to DTC P2195 (See page ES-312).

INSPECTION PROCEDURE

HINT:
Malfunctioning areas can be identified by performing the A/F CONTROL function provided in the ACTIVE TEST. The A/F CONTROL function can help to determine whether the Air-Fuel Ratio (A/F) sensor, Heated Oxygen (HO2) sensor and other potential trouble areas are malfunctioning.
The following instructions describe how to conduct the A/F CONTROL operation using an intelligent tester.
(1) Connect an intelligent tester to the DLC3.
(2) Start the engine and turn the tester ON.
(3) Warm up the engine at an engine speed of 2,500 rpm for approximately 90 seconds.
(4) Select the following menu items: DIAGNOSIS / ENHANCED OBD II / ACTIVE TEST / A/F CONTROL.
(5) Perform the A/F CONTROL operation with the engine in an idling condition (press the RIGHT or LEFT button to change the fuel injection volume).
(6) Monitor the voltage outputs of the A/F and HO2 sensors (AFS B1S1 and O2S B1S2 or AFS B2S1 and O2S B2S2) displayed on the tester.

HINT:
- The A/F CONTROL operation lowers the fuel injection volume by 12.5 % or increases the injection volume by 25 %.
- Each sensor reacts in accordance with increases and decreases in the fuel injection volume.

Standard

Tester Display (Sensor)	Injection Volumes	Status	Voltages
AFS B1S1 or AFS B2S1 (A/F)	+25 %	Rich	Less than 3.0
AFS B1S1 or AFS B2S1 (A/F)	-12.5 %	Lean	More than 3.35
O2S B1S2 or O2S B2S2 (HO2)	+25 %	Rich	More than 0.55
O2S B1S2 or O2S B2S2 (HO2)	-12.5 %	Lean	Less than 0.4

ES

NOTICE:
The Air-Fuel Ratio (A/F) sensor has an output delay of a few seconds and the Heated Oxygen (HO2) sensor has a maximum output delay of approximately 20 seconds.

Case	A/F Sensor (Sensor 1) Output Voltage		HO2 Sensor (Sensor 2) Output Voltage		Main Suspected Trouble Area
1	Injection volume +25 % -12.5 %		Injection volume +25 % -12.5 %		-
	Output voltage More than 3.35 V Less than 3.0 V	OK	Output voltage More than 0.55 V Less than 0.4 V	OK	
2	Injection volume +25 % -12.5 %		Injection volume +25 % -12.5 %		• A/F sensor • A/F sensor heater • A/F sensor circuit
	Output voltage Almost no reaction	NG	Output voltage More than 0.55 V Less than 0.4 V	OK	
3	Injection volume +25 % -12.5 %		Injection volume +25 % -12.5 %		• HO2 sensor • HO2 sensor heater • HO2 sensor circuit
	Output voltage More than 3.35 V Less than 3.0 V	OK	Output voltage Almost no reaction	NG	
4	Injection volume +25 % -12.5 %		Injection volume +25 % -12.5 %		• Injector • Fuel pressure • Gas leakage from exhaust system (Air-fuel ratio extremely lean or rich)
	Output voltage Almost no reaction	NG	Output voltage Almost no reaction	NG	

- To display the graph, select the following menu items on the tester: DIAGNOSIS / ENHANCED OBD II / ACTIVE TEST / A/F CONTROL / USER DATA / AFS B1S1 and O2S B1S2 or AFS B2S1 and O2S B2S2, and press the YES button and then the ENTER button followed by the F4 button.
- Following the A/F CONTROL procedure enables technicians to check and graph the voltage outputs of both the A/F and HO2 sensors.

HINT:
- DTC P2A00 or P2A03 may be also set, when the air-fuel ratio is stuck rich or lean.

- A low A/F sensor voltage could be caused by a rich air-fuel mixture. Check for conditions that would cause the engine to run rich.
- A high A/F sensor voltage could be caused by a lean air-fuel mixture. Check for conditions that would cause the engine to run lean.
- Read freeze frame data using an intelligent tester. Freeze frame data record the engine condition when malfunctions are detected. When troubleshooting, freeze frame data can help determine if the vehicle was moving or stationary, if the engine was warmed up or not, if the air-fuel ratio was lean or rich, and other data, from the time the malfunction occurred.

1 CHECK ANY OTHER DTCS OUTPUT (IN ADDITION TO DTC P2A00 AND/OR P2A03)

(a) Connect an intelligent tester to the DLC3.
(b) Turn the ignition switch ON.
(c) Turn the tester ON.
(d) Select the following menu items: DIAGNOSIS / ENHANCED OBD II / DTC INFO / CURRENT CODES.
(e) Read DTCs.

Result

Display (DTC Output)	Proceed To
P2A00 and/or P2A03	A
P2A00 and/or P2A03 and other DTCs	B

HINT:
If any DTCs other than P2A00 or P2A03 are output, troubleshoot those DTCs first.

B → **GO TO DTC CHART (See page ES-57)**

A

2 INSPECT AIR FUEL RATIO SENSOR (HEATER RESISTANCE) (See page ES-85)

NG → **REPLACE AIR FUEL RATIO SENSOR (See page EC-21)**

OK

3 CHECK HARNESS AND CONNECTOR (A/F SENSOR - ECM) (See page ES-325)

NG → **REPAIR OR REPLACE HARNESS OR CONNECTOR**

OK

4 PERFORM CONFIRMATION DRIVING PATTERN

NEXT

5	CHECK WHETHER DTC OUTPUT RECURS (DTC P2A00 AND/OR P2A03)

(a) Connect an intelligent tester to the DLC3.
(b) Turn the ignition switch ON and turn the tester ON.
(c) Select the following menu items: DIAGNOSIS / ENHANCED OBD II / DTC INFO / CURRENT CODES.
(d) Read DTCs.

Result

Display (DTC Output)	Proceed To
P2A00 and/or P2A03	A
No output	B

ES

B → **CHECK FOR INTERMITTENT PROBLEMS**

A

6	REPLACE AIR FUEL RATIO SENSOR

Replace the air fuel ratio sensor (See page EC-21).

NEXT

7	PERFORM CONFIRMATION DRIVING PATTERN

NEXT

8	CHECK WHETHER DTC OUTPUT RECURS (DTC P2A00 AND/OR P2A03)

(a) Connect an intelligent tester to the DLC3.
(b) Turn the ignition switch ON and turn the tester ON.
(c) Select the following menu items: DIAGNOSIS / ENHANCED OBD II / DTC INFO / CURRENT CODES.
(d) Read DTCs.

Result

Display (DTC Output)	Proceed To
No output	A
P2A00 and/or P2A03	B

B → **CHECK EXTREMELY RICH OR LEAN ACTUAL AIR FUEL RATIO (REFER TO DTC P0171 PROCEDURE)**

A

END

EVAP System

RELATED DTCS

DTCs	Monitoring Items	See Page
P043E	Reference orifice clogged (built into canister pump module)	ES-218
P043F	Reference orifice high-flow (built into canister pump module)	
P0441	• Purge VSV (Vacuum Switching Valve) stuck closed • Purge VSV stuck open • Purge flow	ES-223
P0450	Canister pressure sensor (built into canister pump module) voltage abnormal fluctuation	ES-230
P0451	• Canister pressure sensor (built into canister pump module) noise • Canister pressure sensor (built into canister pump module) signal becomes fixed/flat	
P0452	Canister pressure sensor (built into canister pump module) voltage low	
P0453	Canister pressure sensor (built into canister pump module) voltage high	
P0455	EVAP gross leak	ES-239
P0456	EVAP small leak	
P2401	Leak detection pump stuck OFF (built into canister pump module)	ES-329
P2402	Leak detection pump stuck ON (built into canister pump module)	
P2419	Vent valve stuck closed (built into canister pump module)	ES-335
P2420	Vent valve stuck open (vent) (built into canister pump module)	
P2610	Soak timer (built into ECM)	ES-341

If any EVAP system DTCs are set, the malfunctioning area can be determined using the table below.

ES

Malfunctioning Areas \ DTCs	P043E P043F	P0441	P0450	P0451	P0452	P0453	P0455	P0456	P2401 P2402	P2419	P2420
Reference orifice clogged	●								●	●	
Reference orifice high-flow	●								●	●	
Purge VSV stuck open		●					●				
Purge VSV stuck closed		●									
Canister pressure sensor fixed output				●							
Canister pressure sensor noise				●							
Canister pressure sensor low output			●		●						
Canister pressure sensor high output			●			●					
Gross leak		●					●				
Small leak								●			
Leak detection pump stuck OFF	●								●	●	
Leak detection pump stuck ON	●								●	●	
Vent valve stuck closed	●								●	●	
Vent valve stuck open (vent)											●

Y A106731E11

NOTICE:
If the reference pressure difference between the first and second checks is greater than the specification, all the DTCs relating to the reference pressure (P043E, P043F, P2401, P2402 and P2419) are stored.

DESCRIPTION

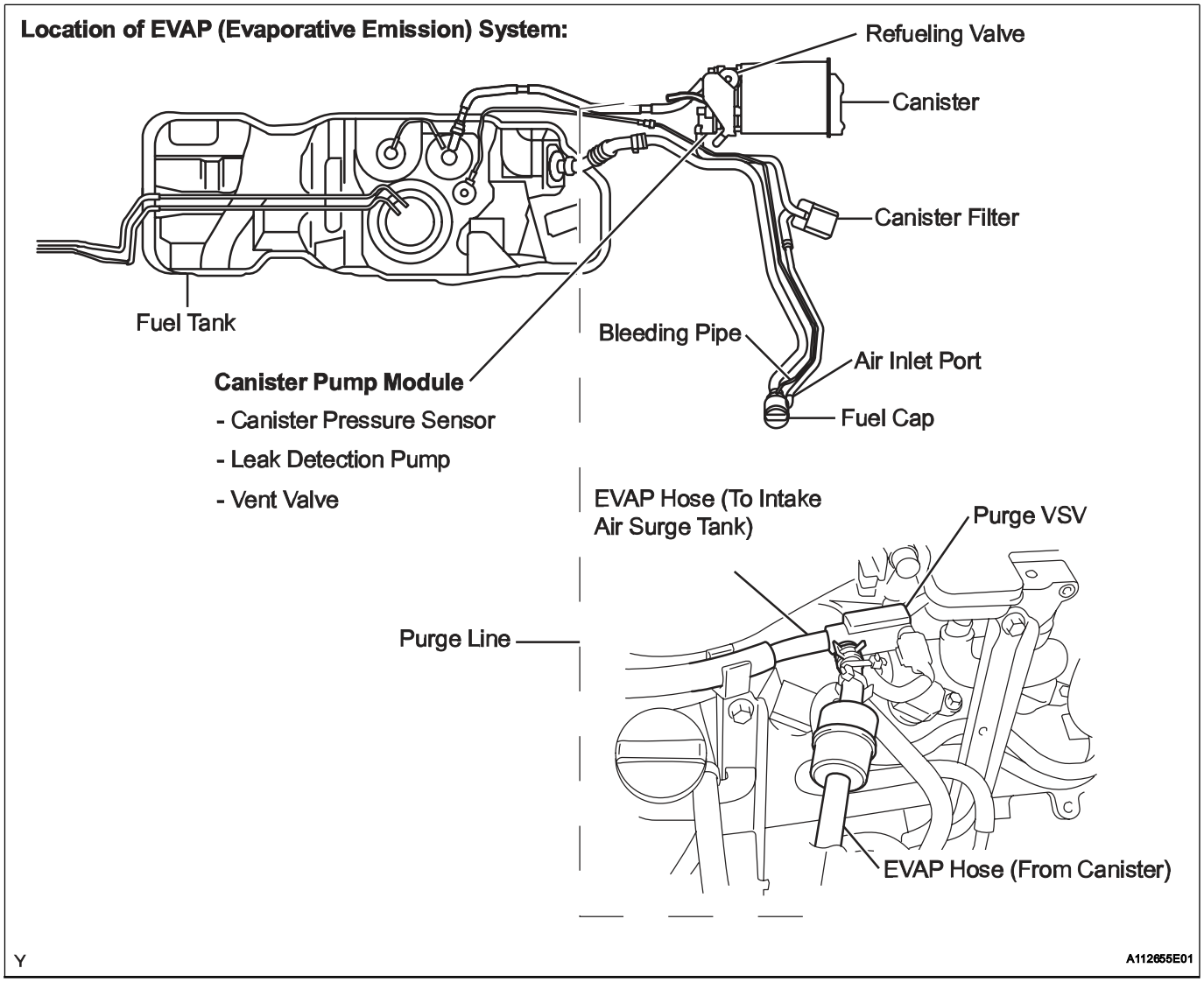

NOTICE:
The canister is located near the fuel tank, underneath the body.

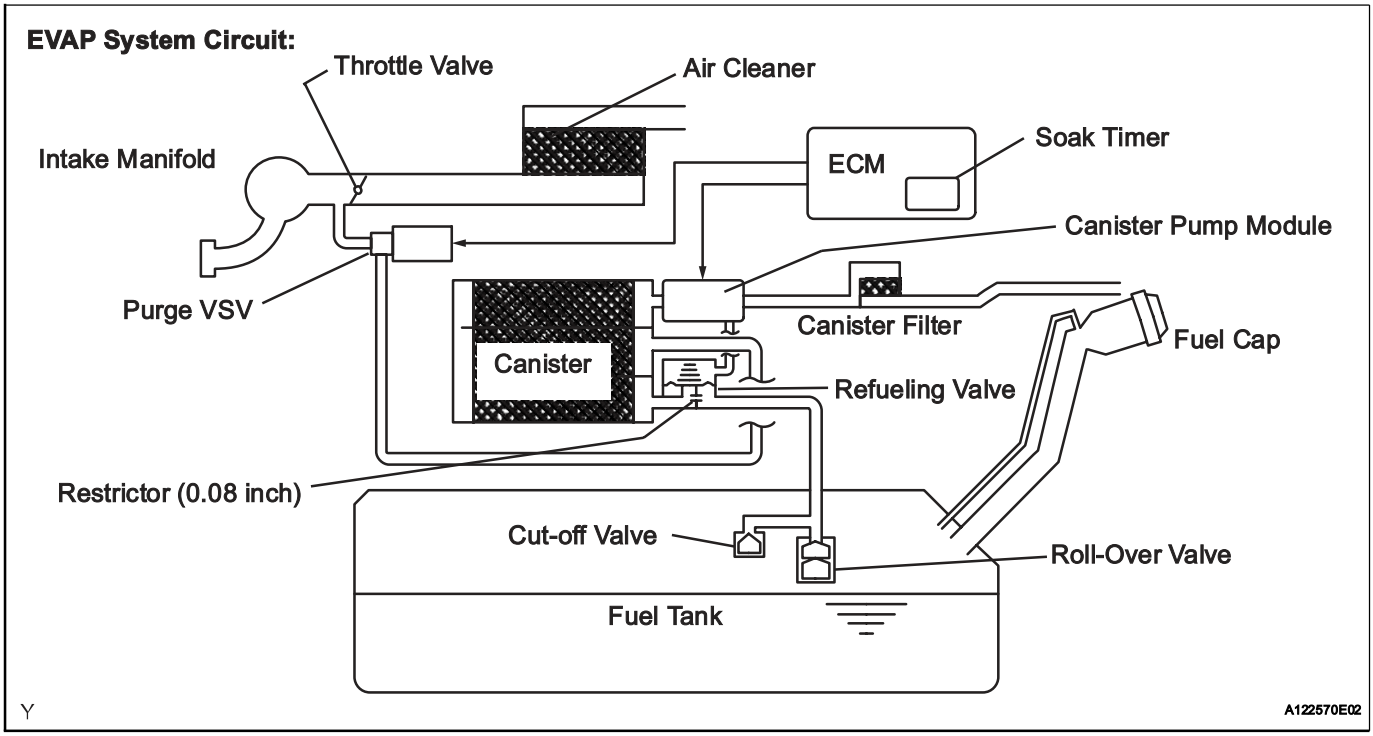

NOTICE:
In this vehicle's EVAP system, turning ON the vent valve does not seal off the EVAP system. To check for leaks in the EVAP system, disconnect the air inlet vent hose and apply pressure from the atmosphere side of the canister.
While the engine is running, if a predetermined condition (closed-loop etc.) is met, the purge VSV is opened by the ECM and stored fuel vapors in the canister are purged into the intake manifold. The ECM changes the duty cycle ratio of the purge VSV to control purge flow volume.
The purge flow volume is also determined by the intake manifold pressure. Atmospheric pressure is allowed into the canister through the vent valve to ensure that the purge flow is maintained when the negative pressure (vacuum) is applied to the canister.
The following two monitors run to confirm appropriate EVAP system operation.

1. **Key-off monitor**
   This monitor checks for EVAP (Evaporative Emission) system leaks and canister pump module malfunctions. The monitor starts 5 hours* after the ignition switch is turned OFF. More than 5 hours are required for the fuel to cool down to stabilize the EVAP pressure, thus making the EVAP system monitor more accurate.
   The leak detection pump creates negative pressure (vacuum) in the EVAP system and the pressure is measured. Finally, the ECM monitors for leaks from the EVAP system, and malfunctions in both the canister pump module and purge VSV, based on the EVAP pressure.
   HINT:
   *: If the engine coolant temperature is not below 35°C (95°F) 5 hours after the ignition switch is turned off, the monitor check starts 2 hours later. If it is still not below 35°C (95°F) 7 hours after the ignition switch is turned off, the monitor check starts 2.5 hours later.
2. **Purge flow monitor**
   The purge flow monitor consists of the two monitors. The 1st monitor is conducted every time and the 2nd monitor is activated if necessary.
   - The 1st monitor
     While the engine is running and the purge VSV (Vacuum Switching Valve) is ON (open), the ECM monitors the purge flow by measuring the EVAP pressure change. If negative pressure is not created, the ECM begins the 2nd monitor.

- The 2nd monitor
  The vent valve is turned OFF (open) and the EVAP pressure is measured. If the variation in the pressure is less than 0.5 kPa-g (3.75 mmHg-g), the ECM interprets this as the purge VSV being stuck closed, and illuminates the MIL and sets DTC P0441 (2 trip detection logic).

Atmospheric pressure check:
In order to ensure reliable malfunction detection, the variation between the atmospheric pressures, before and after conduction of the purge flow monitor, is measured by the ECM.

EVAP Purge Flow:

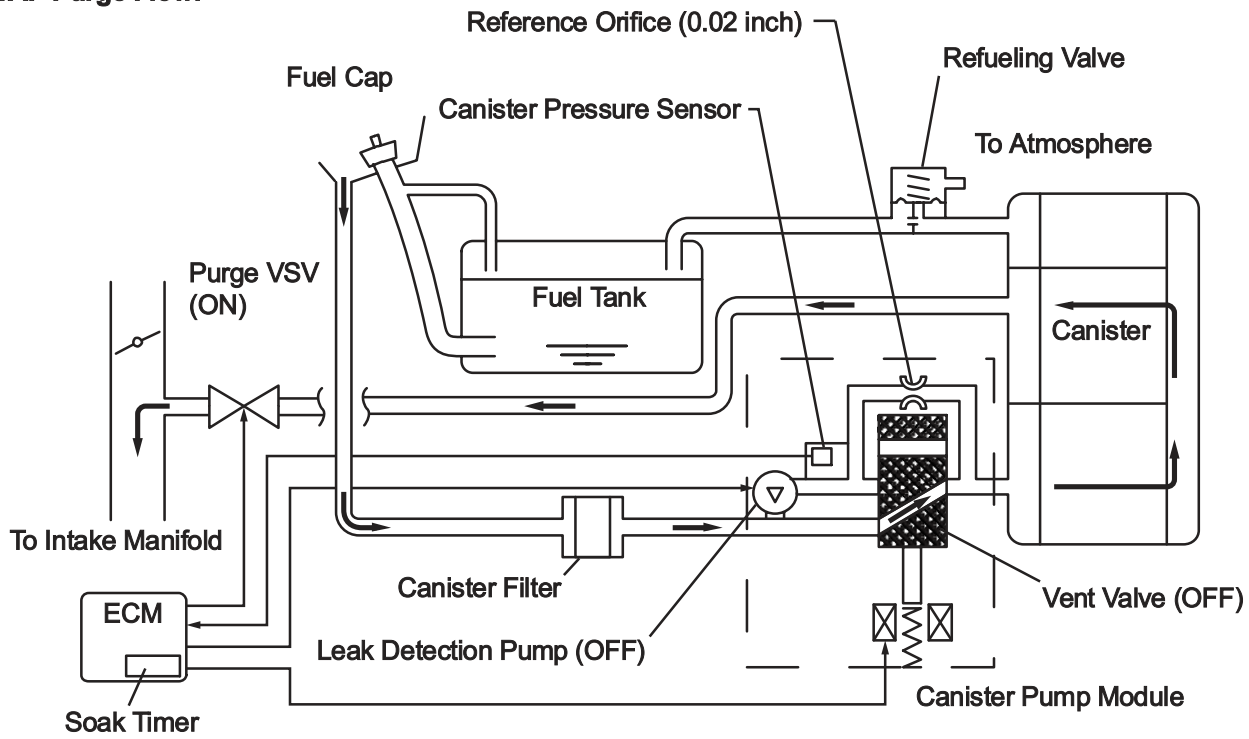

Y

A122571E02

Components	Operations
Canister	Contains activated charcoal to absorb EVAP (Evaporative Emissions) generated in fuel tank.
Cut-off valve	Located in fuel tank. Valve floats and closes when fuel tank 100 % full.
Purge VSV (Vacuum Switching Valve)	Opens or closes line between canister and intake manifold. ECM uses purge VSV to control EVAP purge flow. In order to discharge EVAP absorbed by canister to intake manifold, ECM opens purge VSV. EVAP discharge volume to intake manifold controlled by purge VSV duty cycle ratio (current-carrying time). (Open: ON, Closed: OFF)
Refueling valve	Controls EVAP pressure from fuel tank to canister. Valve consists of diaphragm, spring and restrictor (diameter: 0.08 inch). When fuel vapor and pressure inside fuel tank increase, valve opens. While EVAP purged, valve closes and restrictor prevents large amount of vacuum from affecting pressure in fuel tank. Valve opened while refueling.
Roll-over valve	Located in fuel tank. Valve closes by its own weight when vehicle overturns to prevent fuel from spilling out.
Soak timer	Built into ECM. To ensure accurate EVAP monitor, measures 5 hours (+-15 minutes) after ignition switch turned OFF. This allows fuel to cool down, stabilizing EVAP pressure. When approximately 5 hours elapsed, ECM activates (refer to fig. 3).
Canister pump module	Consists of (a) to (d) below. Canister pump module cannot be disassembled.
(a) Vent valve	Vents and closes EVAP system. When ECM turns valve ON, EVAP system closed. When, ECM turns valve OFF, EVAP system vented. Negative pressure (vacuum) created in EVAP system to check for EVAP leaks by closing purge VSV, turning on vent valve (closed) and operating leak detection pump (refer to fig. 1).
(b) Canister pressure sensor	Indicates pressure as voltages. ECM supplies regulated 5 V to canister pressure sensor, and uses feedback from sensor to monitor EVAP system pressure (refer to fig. 2).

Components	Operations
(c) Leak detection pump	Creates negative pressure (vacuum) in EVAP system for leak check.
(d) Reference orifice	Has opening with 0.02 inch diameter. Vacuum produced through orifice by closing purge VSV, turning off vent valve and operating leak detection pump, to monitor reference pressure. Reference pressure indicates small leak of EVAP.

Canister Pump Module (fig. 1):

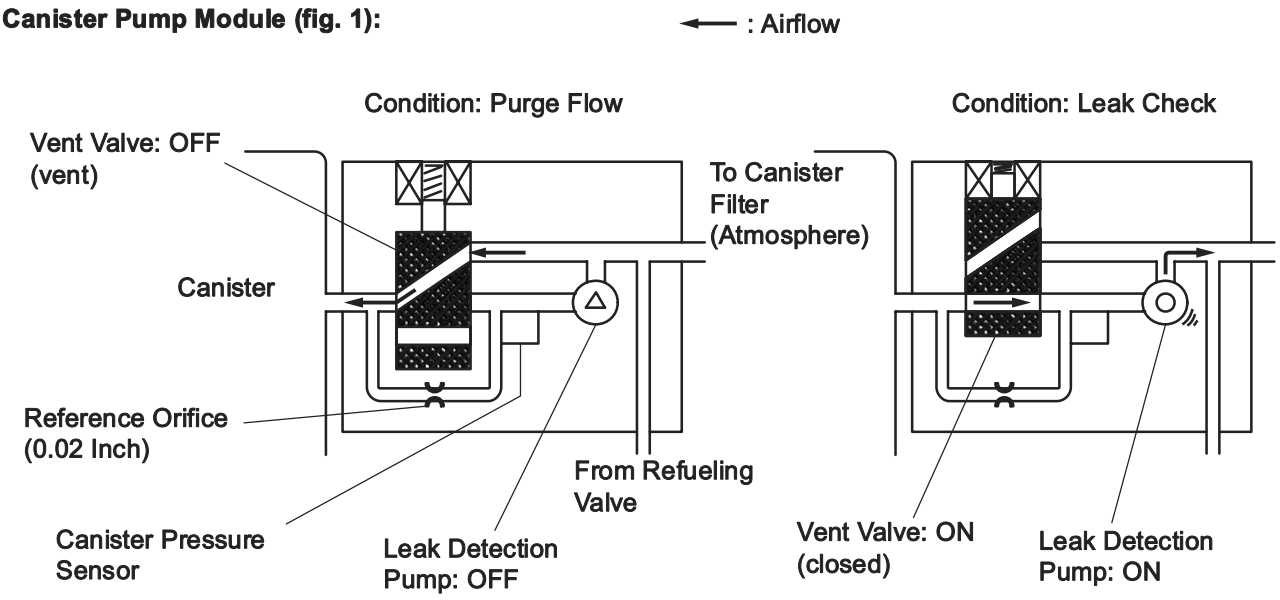

Y

A115902E02

Canister Pressure Sensor Specification (fig. 2):

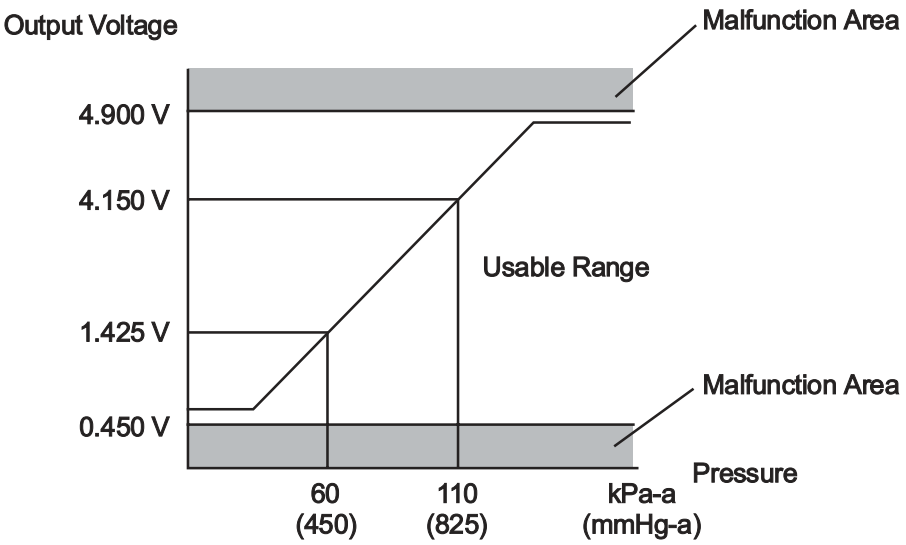

HINT:

Standard atmospheric pressure is 101.3 kPa-a (760 mmHg-a)

A115543E06

Soak Timer Circuit:

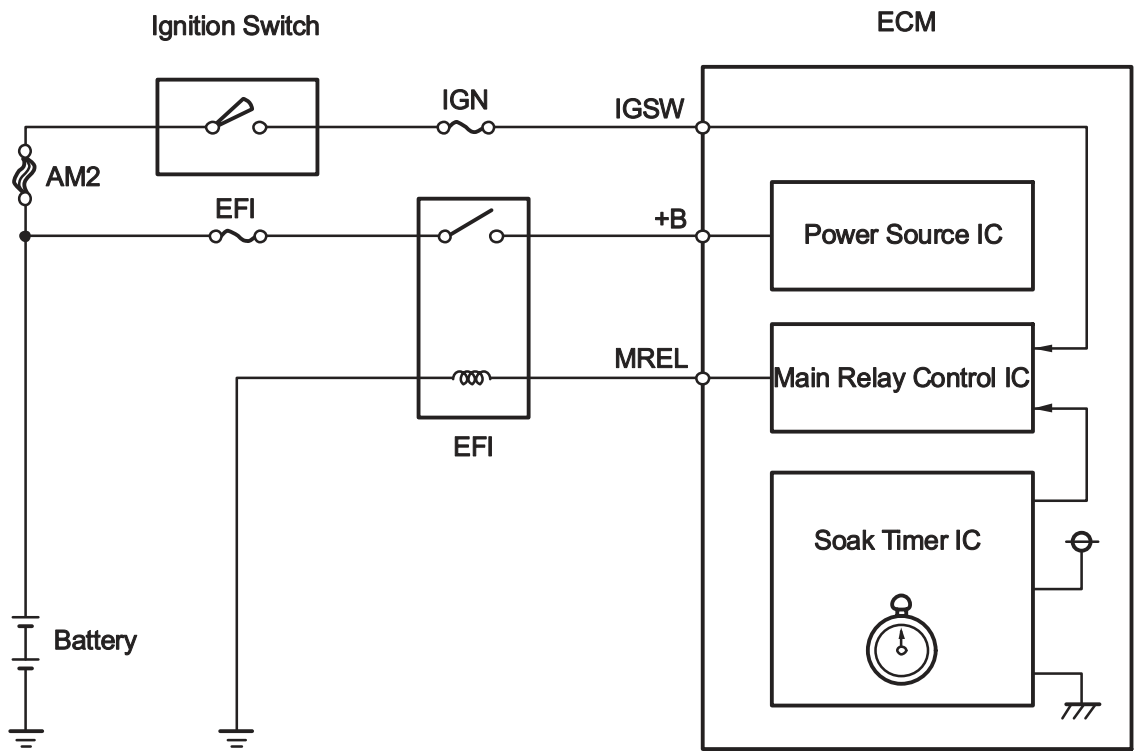

Y

A133428E01

WIRING DIAGRAM

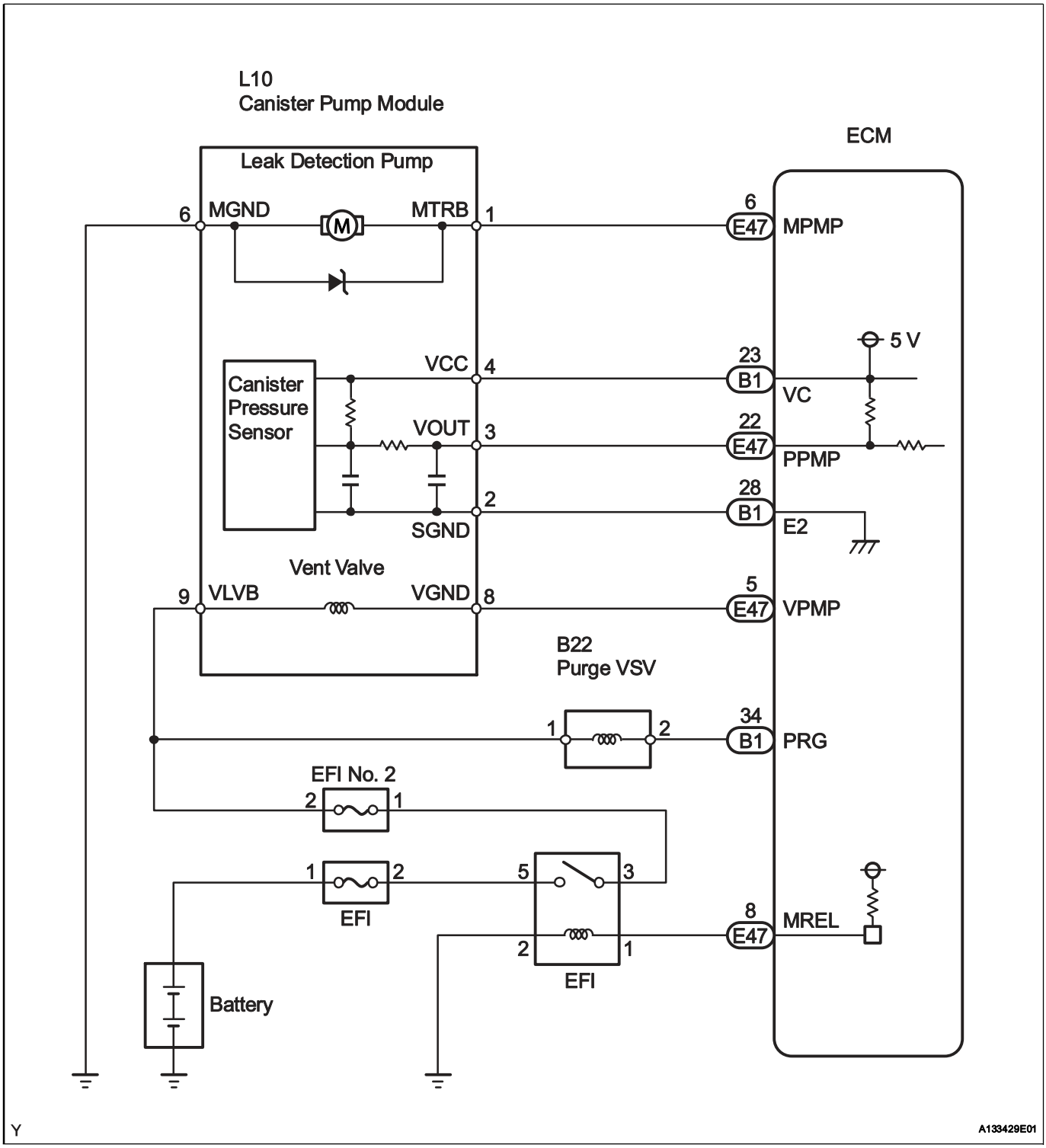

INSPECTION PROCEDURE

NOTICE:

An intelligent tester is required to conduct the following diagnostic troubleshooting procedure.

HINT:

- Using an intelligent tester monitor results enables the EVAP (Evaporative Emission) system to be confirmed.

- Read freeze frame data using an intelligent tester. Freeze frame data record the engine condition when malfunctions are detected. When troubleshooting, freeze frame data can help determine if the vehicle was moving or stationary, if the engine was warmed up or not, if the air-fuel ratio was lean or rich, and other data, from the time the malfunction occurred.

1	CONFIRM DTC

(a) Turn the ignition switch OFF and wait for 10 seconds.
(b) Turn the ignition switch ON.
(c) Turn the ignition switch OFF and wait for 10 seconds.
(d) Connect an intelligent tester to the DLC3.
(e) Turn the ignition switch ON and turn the tester ON.
(f) Select the following menu items: DIAGNOSIS / ENHANCED OBD II / DTC INFO / CURRENT CODES.
(g) Confirm DTCs and freeze frame data.
If any EVAP system DTCs are set, the malfunctioning area can be determined using the table below.

Malfunctioning Areas \ DTCs	P043E P043F	P0441	P0450	P0451	P0452	P0453	P0455	P0456	P2401 P2402	P2419	P2420
Reference orifice clogged	●								●	●	
Reference orifice high-flow	●								●	●	
Purge VSV stuck open		●					●				
Purge VSV stuck closed		●									
Canister pressure sensor fixed output				●							
Canister pressure sensor noise				●							
Canister pressure sensor low output			●		●						
Canister pressure sensor high output			●			●					
Gross leak		●					●				
Small leak								●			
Leak detection pump stuck OFF	●								●	●	
Leak detection pump stuck ON	●								●	●	
Vent valve stuck closed	●								●	●	
Vent valve stuck open (vent)											●

Y A106731E11

NOTICE:
If the reference pressure difference between the first and second checks is greater than the specification, all the DTCs relating to the reference pressure (P043E, P043F, P2401, P2402 and P2419) are stored.

NEXT

2	PERFORM EVAP SYSTEM CHECK (AUTO OPERATION)

NOTICE:
- **The EVAP SYSTEM CHECK (AUTO OPERATION) consists of five steps performed automatically by the intelligent tester. It takes a maximum of approximately 18 minutes.**
- **Do not perform the EVAP SYSTEM CHECK when the fuel tank is more than 90 % full because the cut-off valve may be closed, making the fuel tank leak check unavailable.**
- **Do not run the engine during this operation.**
- **When the temperature of the fuel is 35°C (95°F) or more, a large amount of vapor forms and any check results become inaccurate. When performing the EVAP SYSTEM CHECK, keep the temperature below 35°C (95°F).**

(a) Clear DTCs (See page ES-38).
(b) Select the following menu items: DIAGNOSIS / ENHANCED OBD II / SYSTEM CHECK / EVAP SYS CHECK / AUTO OPERATION.
(c) After the EVAP SYSTEM CHECK is completed, check for pending DTCs by selecting the following menu items: DIAGNOSIS / ENHANCED OBD II / DTC INFO / PENDING CODES.
HINT:
If no pending DTCs are displayed, perform the MONITOR CONFIRMATION (see "Diagnostic Help" menu). After this confirmation, check for pending DTCs. If no DTCs are displayed, the EVAP system is normal.

NEXT

3	PERFORM EVAP SYSTEM CHECK (MANUAL OPERATION)

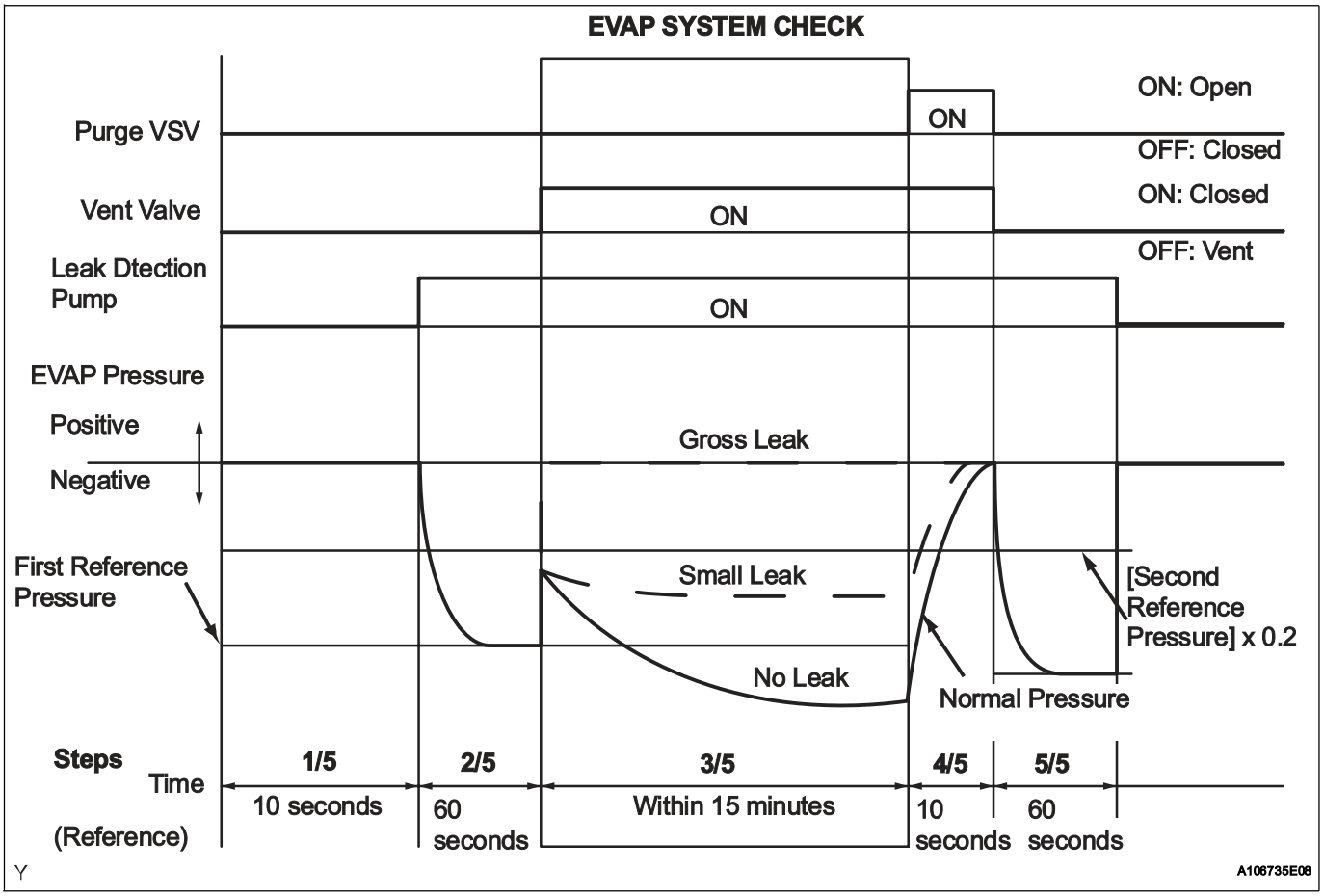

NOTICE:

- **In the EVAP SYSTEM CHECK (MANUAL OPERATION), perform the series of 5 EVAP SYSTEM CHECK steps manually using the intelligent tester.**
- **Do not perform the EVAP SYSTEM CHECK when the fuel tank is more than 90 % full because the cut-off valve may be closed, making the fuel tank leak check unavailable.**
- **Do not run the engine during this operation.**
- **When the temperature of the fuel is 35°C (95°F) or more, a large amount of vapor forms and any check results become inaccurate. When performing the EVAP SYSTEM CHECK, keep the temperature below 35°C (95°F).**

(a) Clear DTCs (See page ES-38).

(b) Select the following menu items: DIAGNOSIS / ENHANCED OBD II / SYSTEM CHECK / EVAP SYS CHECK / MANUAL OPERATION.

NEXT

4	PERFORM EVAP SYSTEM CHECK (STEP 1/5)

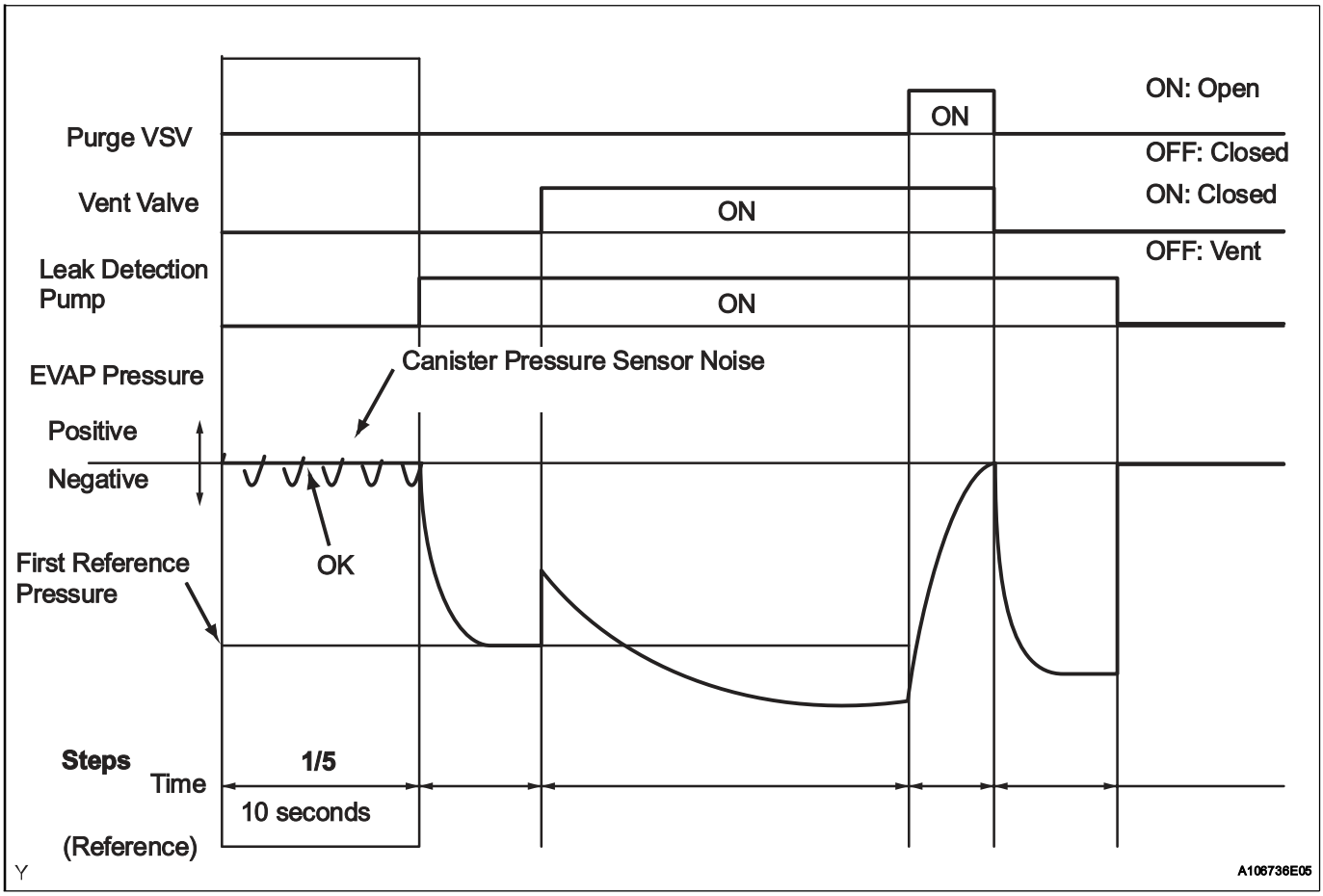

(a) Check the EVAP pressure in step 1/5.

Result

DTCs*	Test Results	Suspected Trouble Areas	Proceed To
-	Virtually no variation in EVAP pressure	Not yet determined	A
P0451	EVAP pressure fluctuates by +-0.3 kPa-g (2.25 mmHg-g) or more	Canister pressure sensor noise	B

*: These DTCs are already present in the ECM when the vehicle arrives and are confirmed in step 1.

B → **Go to step 30**

A

5	PERFORM EVAP SYSTEM CHECK (STEP 1/5 TO 2/5)

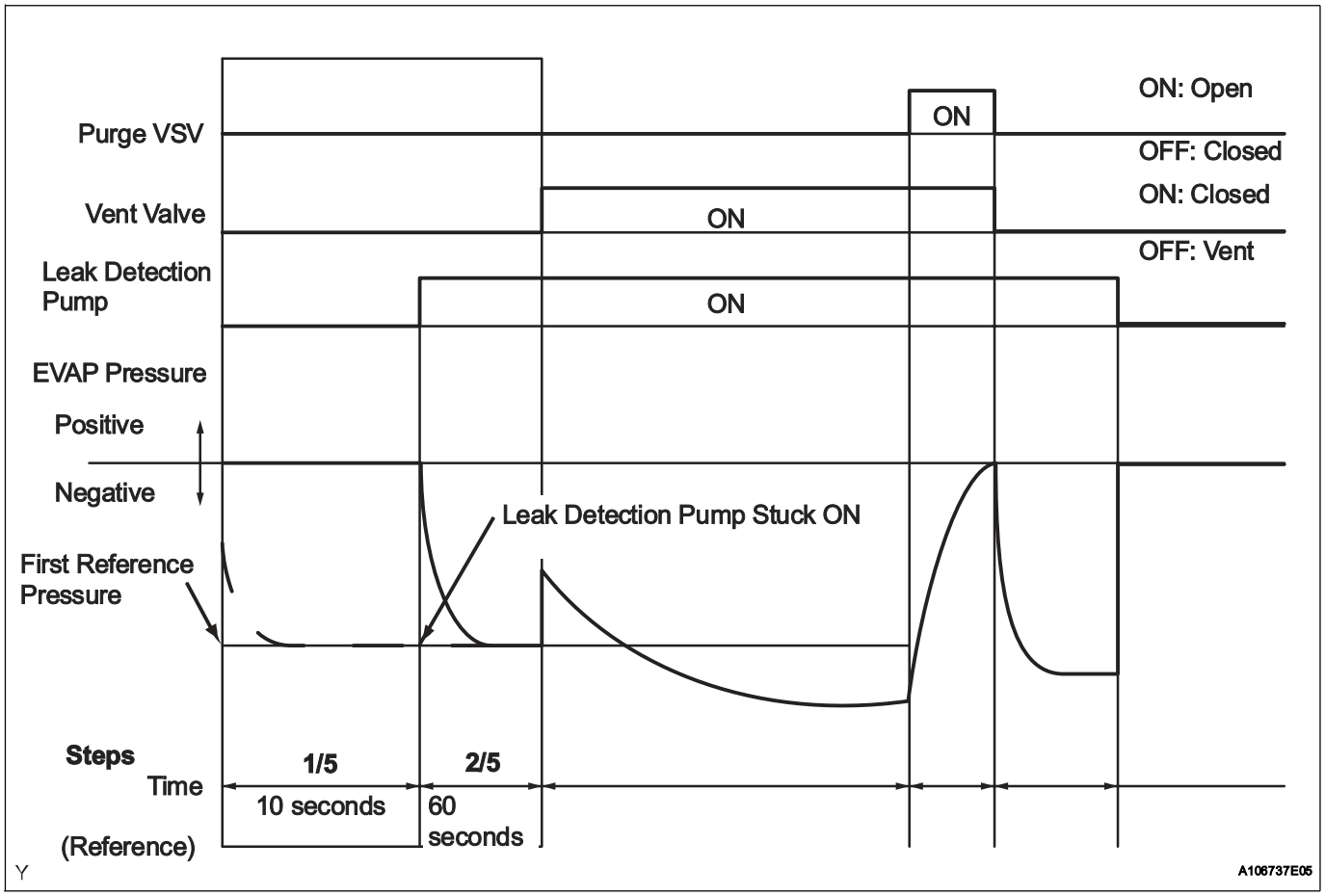

(a) Check the EVAP pressure in steps 1/5 and 2/5.

Result

DTCs*	Test Results	Suspected Trouble Areas	Proceed To
-	Virtually no variation in EVAP pressure during step 1/5. Then decreases to reference pressure	Not yet determined	A
P2402	Small difference between EVAP pressures during steps 1/5 and 2/5	Leak detection pump stuck ON	B

*: These DTCs are already present in the ECM when the vehicle arrives and are confirmed in step 1.
HINT:
The first reference pressure is the value determined in step 2/5.

B → Go to step 23

A

6	PERFORM EVAP SYSTEM CHECK (STEP 2/5)

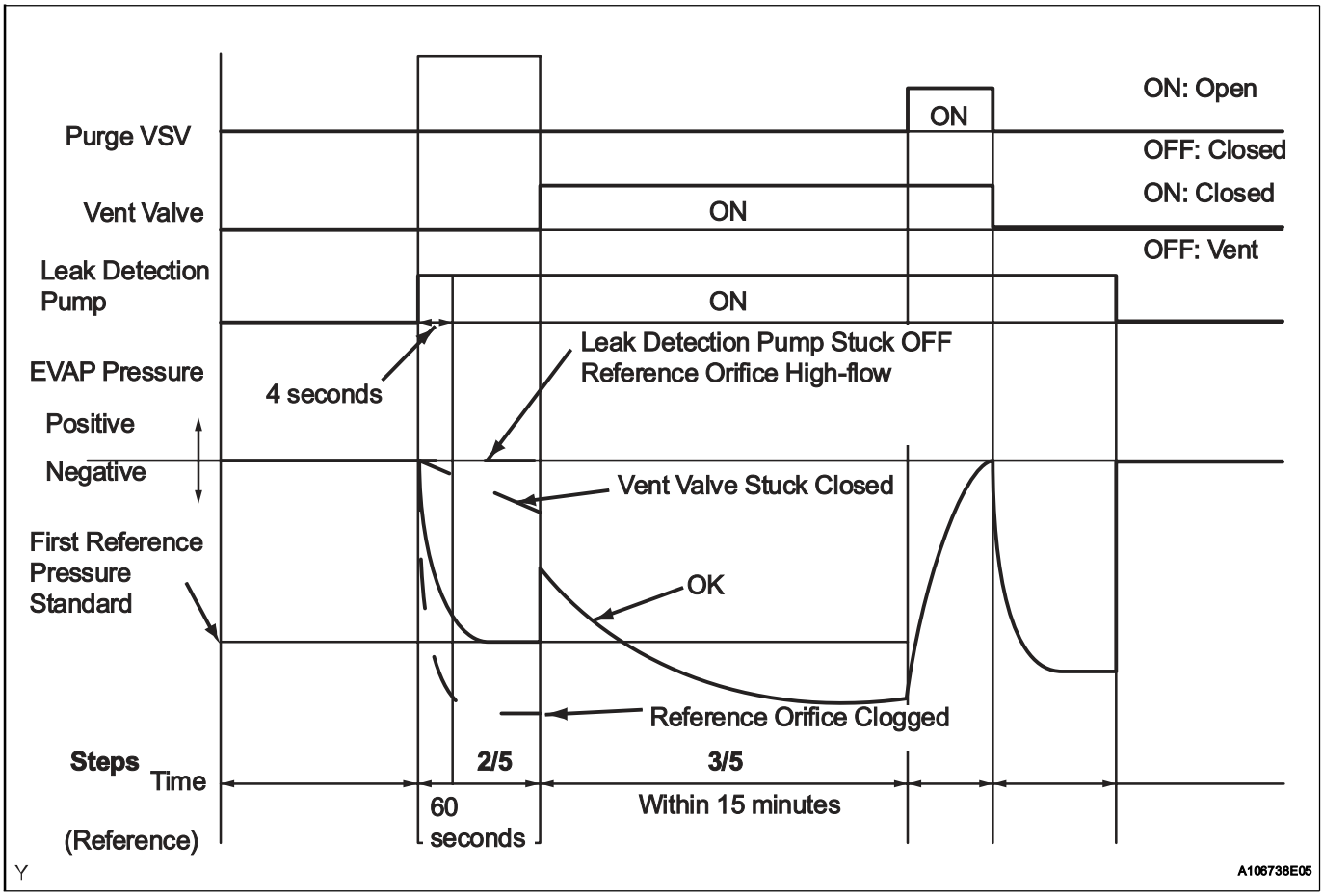

HINT:
Make a note of the pressures checked in steps (a) and (b) below.
(a) Check the EVAP pressure 4 seconds after the leak detection pump is activated*.
*: The leak detection pump begins to operate as step 1/5 finishes and step 2/5 starts.
(b) Check the EVAP pressure again when it has stabilized. This pressure is the reference pressure.

Result

DTCs*	Test Results	Suspected Trouble Areas	Proceed To
-	EVAP pressure in step (b) between -4.85 kPa-g and -1.057 kPa-g (-36.4 mmHg-g and -7.93 mmHg-g)	Not yet determined	A
P043F and P2401	EVAP pressure in step (b) -1.057 kPa-g (-7.93 mmHg-g) or more	• Reference orifice high-flow • Leak detection pump stuck OFF	B
P043E	EVAP pressure in step (b) below -4.85 kPa-g (-36.4 mmHg-g)	Reference orifice clogged	C
P2419	EVAP pressure in step (a) more than -1.057 kPa-g (-7.93 mmHg-g)	Vent valve stuck closed	D

*: These DTCs are already present in the ECM when the vehicle arrives and are confirmed in step 1.

B	Go to step 11
C	Go to step 30
D	Go to step 19

A

7	PERFORM EVAP SYSTEM CHECK (STEP 2/5 TO 3/5)

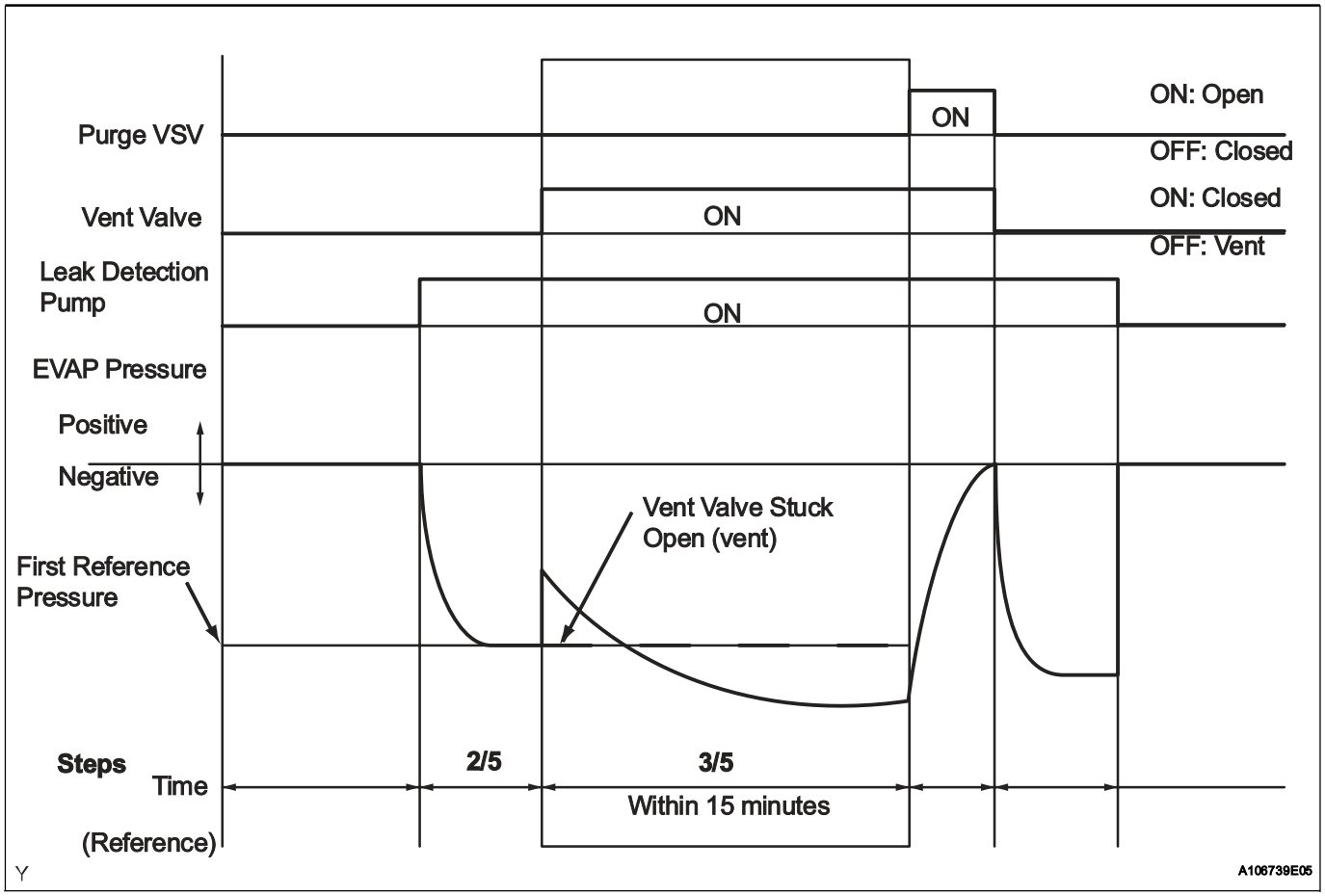

(a) Check the EVAP pressure increase in step 3/5.

Result

DTCs*	Test Results	Suspected Trouble Areas	Proceed To
-	EVAP pressure increases by 0.3 kPa-g (2.25 mmHg-g) or more within 10 seconds of proceeding from step 2/5 to step 3/5	Not yet determined	A
P2420	No variation in EVAP pressure despite proceeding from step 2/5 to step 3/5	Vent valve stuck open (vent)	B
P0451	No variation in EVAP pressure during steps 1/5 through 3/5	Canister pressure sensor malfunction fixed	C

*: These DTCs are already present in the ECM when the vehicle arrives and are confirmed in step 1.

B	Go to step 20

C → Go to step 30

A

8	PERFORM EVAP SYSTEM CHECK (STEP 3/5)

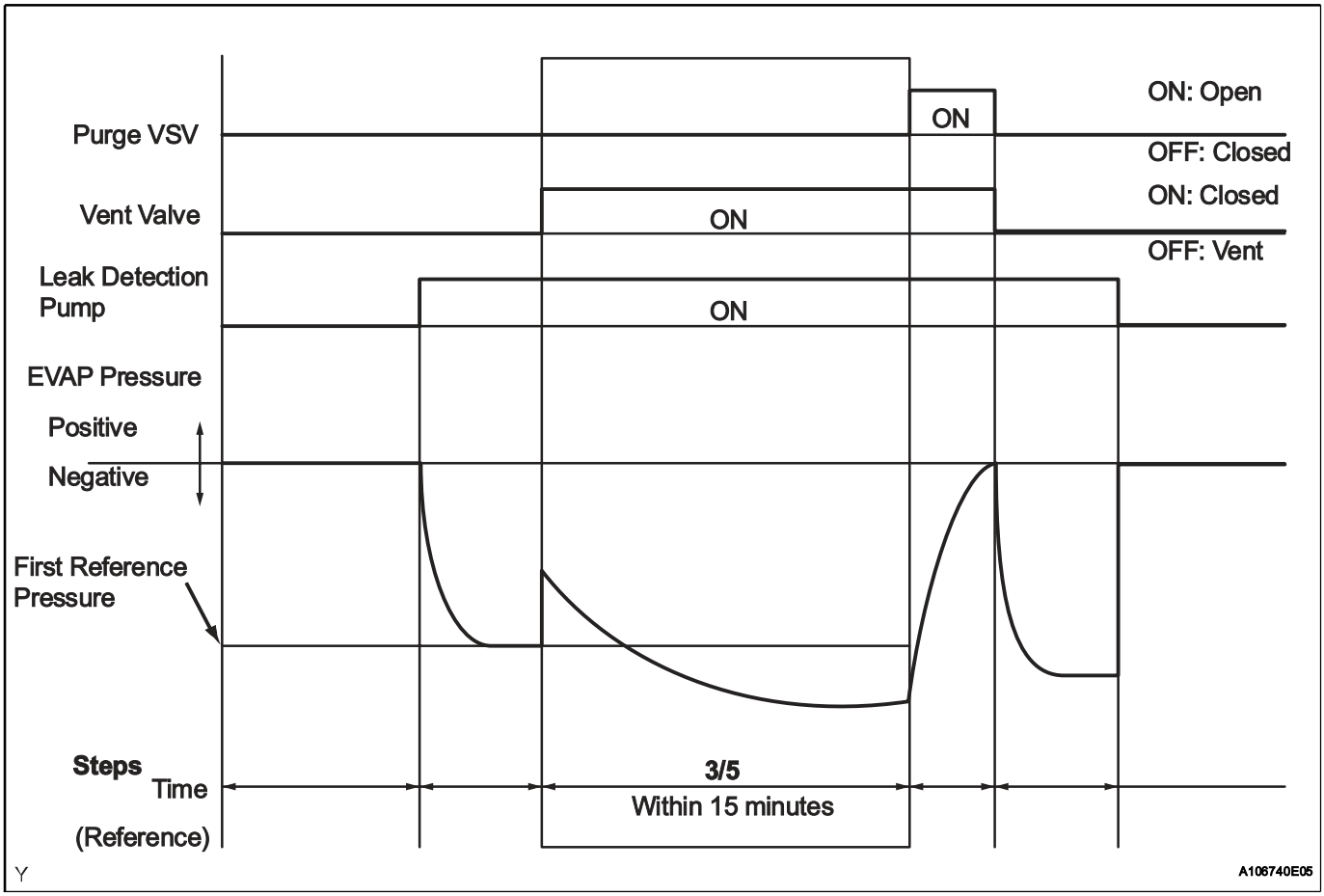

(a) Wait until the EVAP pressure change is less than 0.1 kPa-g (0.75 mmHg-g) for 30 seconds.

(b) Measure the EVAP pressure and record it.
HINT:
A few minutes are required for the EVAP pressure to become saturated. When there is little fuel in the fuel tank, it takes up to 15 minutes.

NEXT

9	PERFORM EVAP SYSTEM CHECK (STEP 4/5)

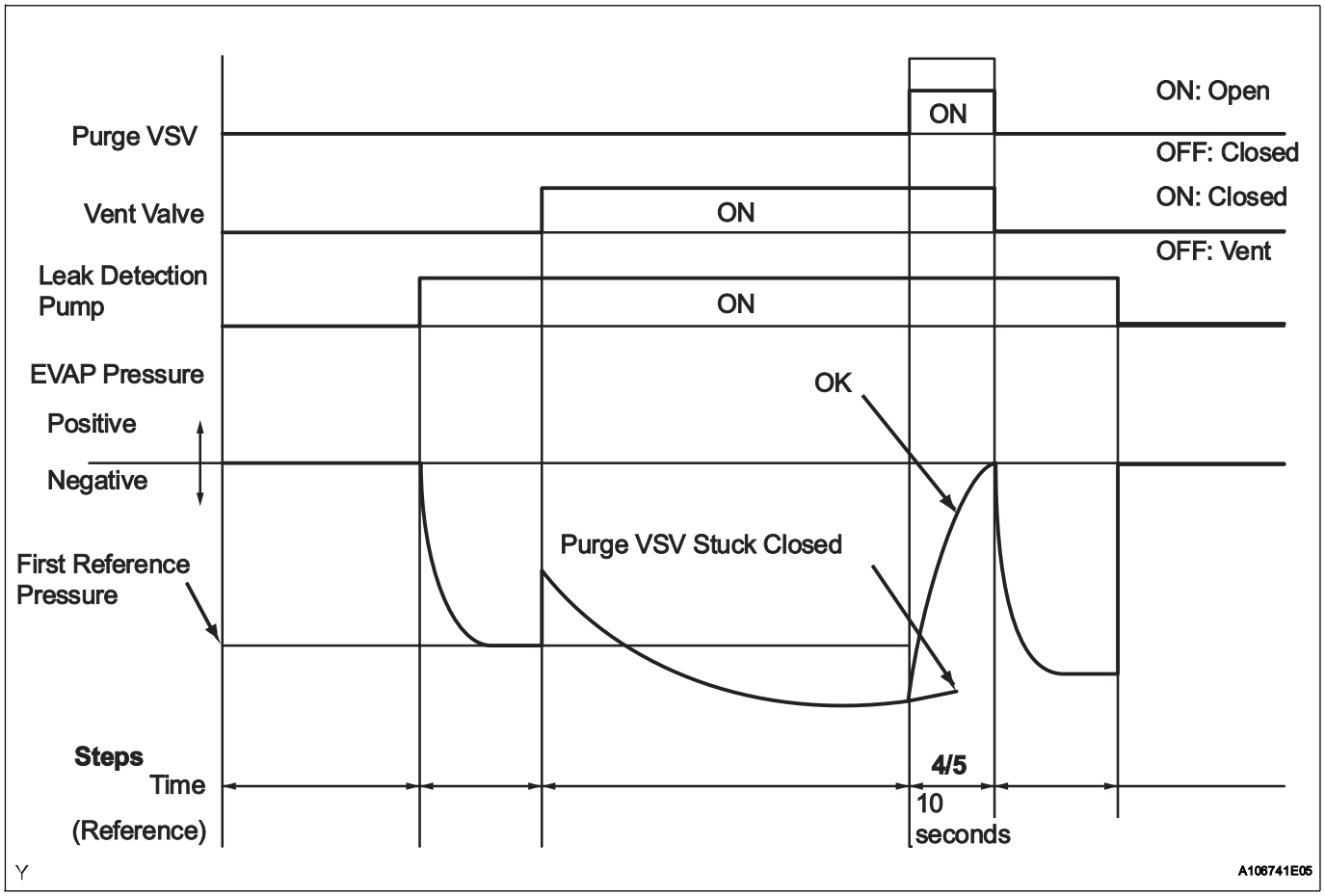

(a) Check the EVAP pressure in step 4/5.

Result

DTCs*	Test Results	Suspected Trouble Areas	Proceed To
-	EVAP pressure increases by 0.3 kPa-g (2.25 mmHg-g) or more within 10 seconds of proceeding from step 3/5 to step 4/5	Not yet determined	A
P0441	EVAP pressure increases by 0.3 kPa-g (2.25 mmHg-g) or more within 10 seconds of proceeding from step 3/5 to step 4/5	Problems in EVAP hose between purge VSV and intake manifold	B
P0441	Variation in EVAP pressure less than 0.3 kPa-g (2.25 mmHg-g) for 10 seconds, after proceeding from step 3/5 to step 4/5	Purge VSV stuck closed	C

*: These DTCs are already present in the ECM when the vehicle arrives and are confirmed in step 1.

B → Go to step 15

C → Go to step 12

A

10	PERFORM EVAP SYSTEM CHECK (STEP 5/5)

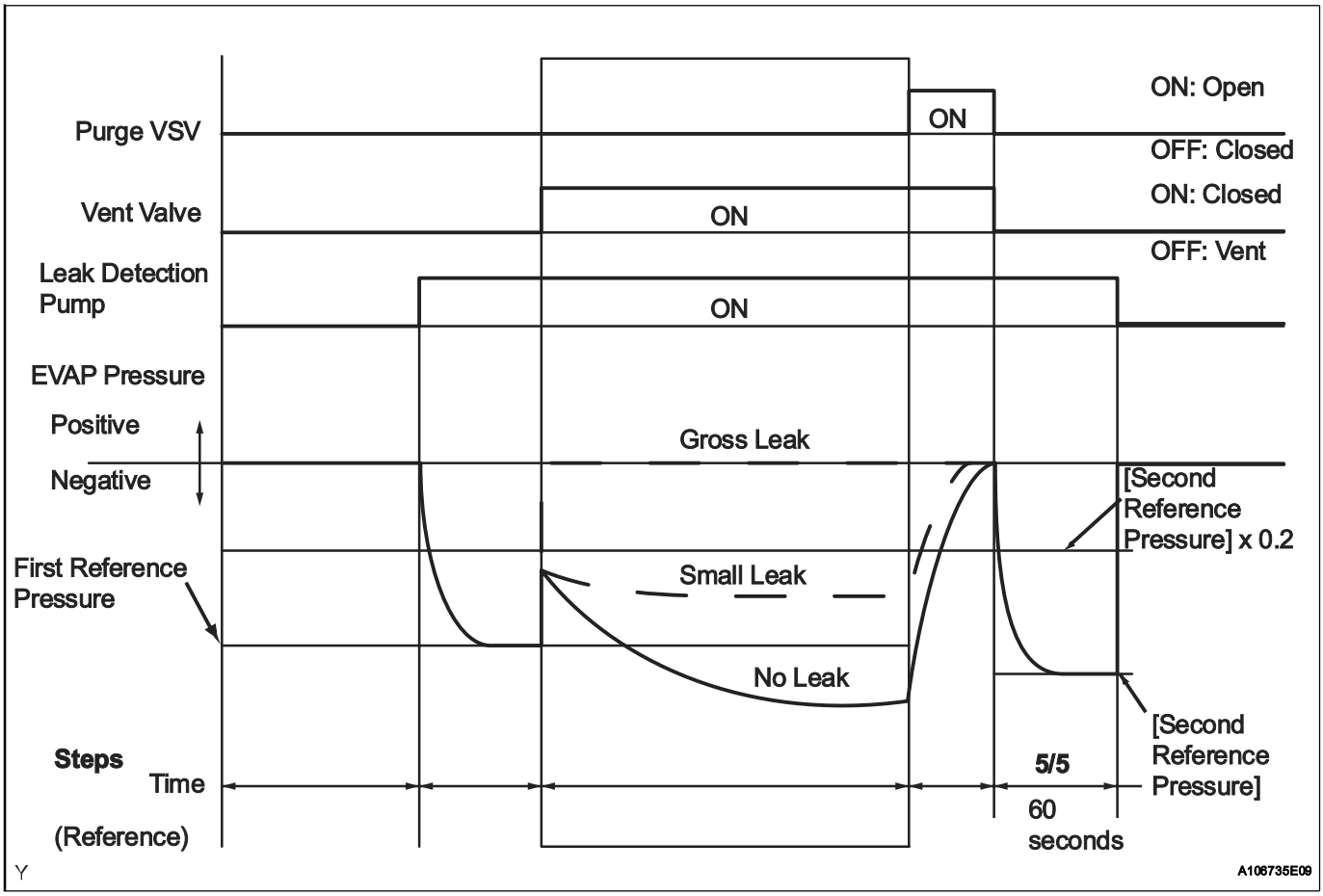

(a) Check the EVAP pressure in step 5/5.
(b) Compare the EVAP pressure in step 3/5 and the second reference pressure (step 5/5).

Result

DTCs*	Test Results	Suspected Trouble Areas	Proceed To
-	EVAP pressure (step 3/5) lower than second reference pressure (step 5/5)	Not yet determined (no leakage from EVAP system)	A
P0441 and P0455	EVAP pressure (step 3/5) higher than [second reference pressure (step 5/5) x 0.2]	• Purge VSV stuck open • EVAP gross leak	B
P0456	EVAP pressure (step 3/5) higher than second reference pressure (step 5/5)	EVAP small leak	B

*: These DTCs are already present in the ECM when the vehicle arrives and are confirmed in step 1.

A	Go to step 36
B	Go to step 12

11	PERFORM EVAP SYSTEM CHECK (STEP 3/5)

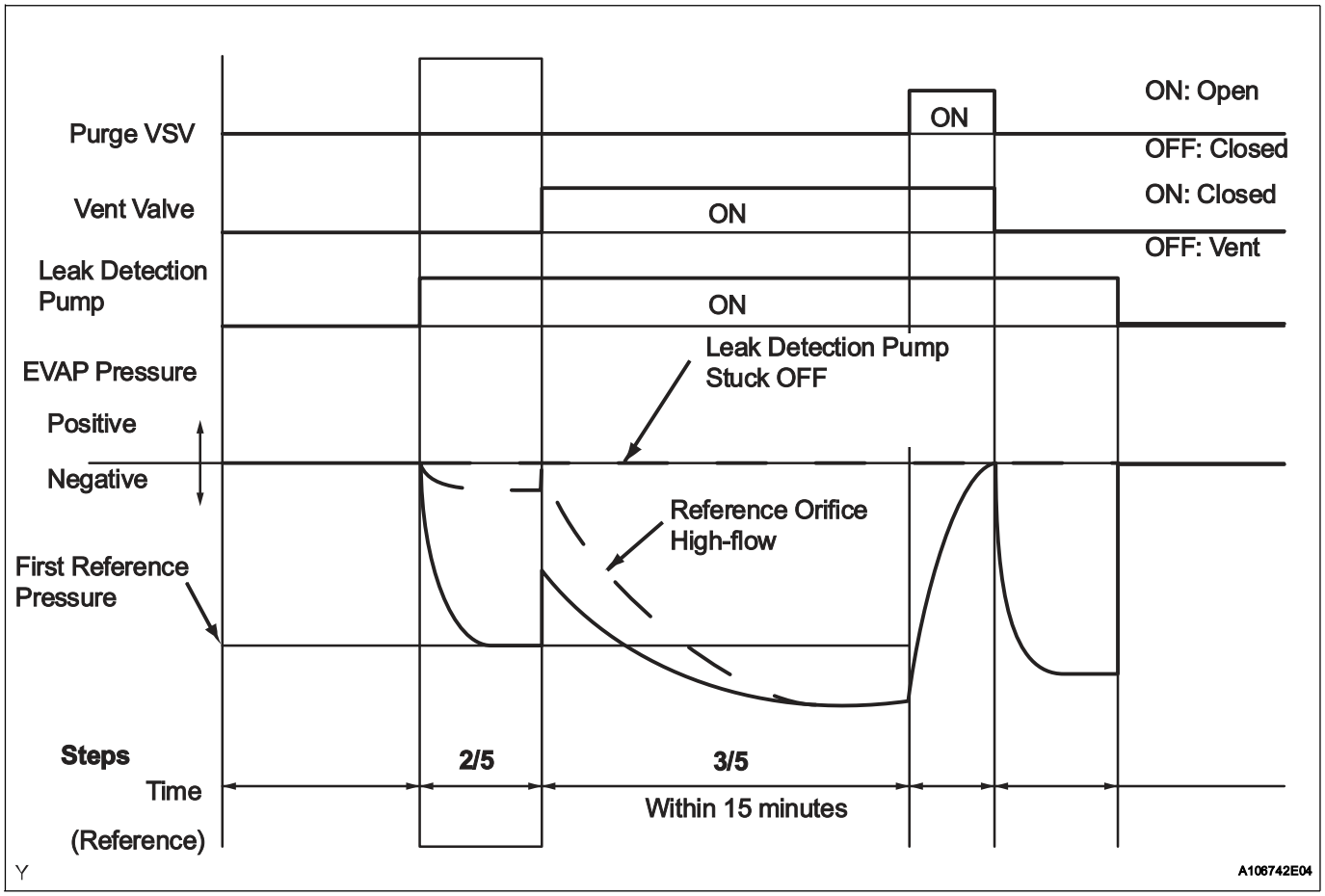

(a) Check the EVAP pressure in step 3/5.

Result

DTCs*	Test Results	Suspected Trouble Areas	Proceed To
P043F	EVAP pressure less than [reference pressure] measured at 2/5	Reference orifice high-flow	A
P2401	EVAP pressure almost same as [reference pressure] measured at 2/5	Leak detection pump stuck OFF	B

*: These DTCs are already present in the ECM when the vehicle arrives and are confirmed in step 1.
HINT:
The first reference pressure is the value determined in step 2/5.

A	Go to step 30
B	Go to step 23

12 PERFORM ACTIVE TEST USING INTELLIGENT TESTER (PURGE VSV)

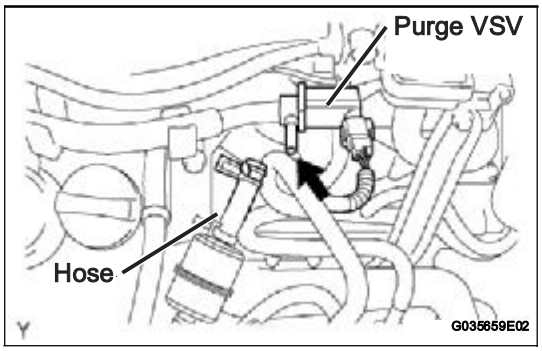

(a) Select the following menu items: DIAGNOSIS / ENHANCED OBD II/ ACTIVE TEST / EVAP VSV.
(b) Disconnect the hose (connected to the canister) from the purge VSV.
(c) Start the engine.
(d) Using the tester, turn off the purge VSV (EVAP VSV: OFF).
(e) Use your finger to confirm that the purge VSV has no suction.
(f) Using the tester, turn on the purge VSV (EVAP VSV: ON).
(g) Use your finger to confirm that the purge VSV has suction.

Result

Test Results	Suspected Trouble Areas	Proceed To
No suction when purge VSV turned OFF, and suction applied when turned ON	Purge VSV normal	A
Suction applied when purge VSV turned OFF	Purge VSV stuck open	B
No suction when purge VSV turned ON	• Purge VSV stuck closed • Problems with EVAP hose between purge VSV and intake air surge tank	C

(h) Reconnect the hose.

B → Go to step 14

C → Go to step 15

A

13 CHECK FUEL CAP ASSEMBLY

(a) Check that the fuel cap is correctly installed and confirm the fuel cap meets OEM specifications.
(b) Confirm that the fuel cap is tightened until a few click sounds are heard.
HINT:
If an EVAP tester is available, check the fuel cap using the tester.
(1) Remove the fuel cap and install it onto a fuel cap adaptor.
(2) Connect an EVAP tester pump hose to the adaptor, and pressurize the cap to 3.2 to 3.7 kPa (24 to 28 mmHg) using an EVAP tester pump.
(3) Seal the adaptor and wait for 2 minutes.
(4) Check the pressure. If the pressure is 2 kPa (15 mmHg) or more, the fuel cap is normal.

Result

Test Results	Suspected Trouble Areas	Proceed To
Fuel cap correctly installed	-	A

Test Results	Suspected Trouble Areas	Proceed To
Fuel cap loose	• Fuel cap improperly installed • Defective fuel cap • Fuel cap does not meet OEM specifications	B
No fuel cap	-	C

(5) Reinstall the fuel cap.

A	Go to step 29
B	Go to step 27
C	Go to step 28

14 INSPECT VACUUM SWITCHING VALVE ASSEMBLY NO. 1 (PURGE VSV)

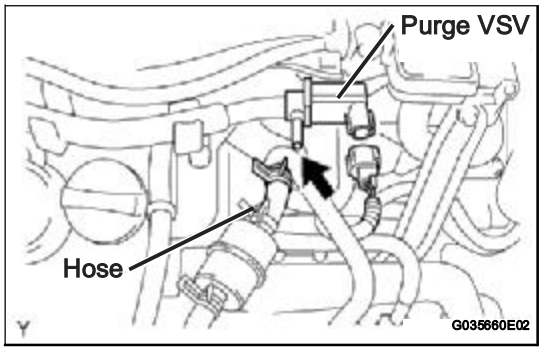

(a) Turn the ignition switch OFF.
(b) Disconnect the B22 purge VSV connector.
(c) Disconnect the hose (connected to the canister) from the purge VSV.
(d) Start the engine.
(e) Use your finger to confirm that the purge VSV has no suction.

Result

Test Results	Suspected Trouble Areas	Proceed To
No suction	ECM	A
Suction applied	Purge VSV	B

(f) Reconnect the purge VSV connector.
(g) Reconnect the hose.

A	Go to step 35
B	Go to step 31

15 CHECK EVAP HOSE (PURGE VSV - INTAKE AIR SURGE TANK)

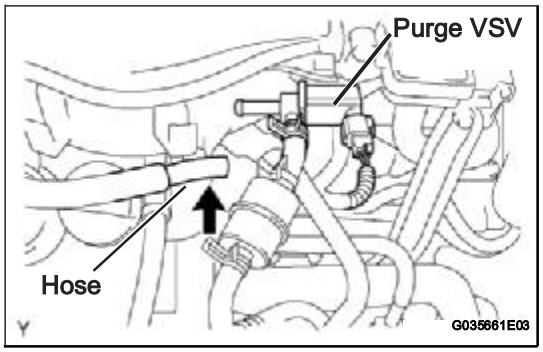

(a) Disconnect the hose (connected to the intake air surge tank) from the purge VSV.
(b) Start the engine.
(c) Use your finger to confirm that the hose has suction.

Result

Test Results	Suspected Trouble Areas	Proceed To
Suction applied	EVAP hose between purge VSV and intake air surge tank normal	A
No suction	• Intake air surge tank • EVAP hose between purge VSV and intake air surge tank	B

(d) Reconnect the hose.

B → **Go to step 26**

A

ES

16 INSPECT VACUUM SWITCHING VALVE ASSEMBLY NO. 1 (PURGE VSV)

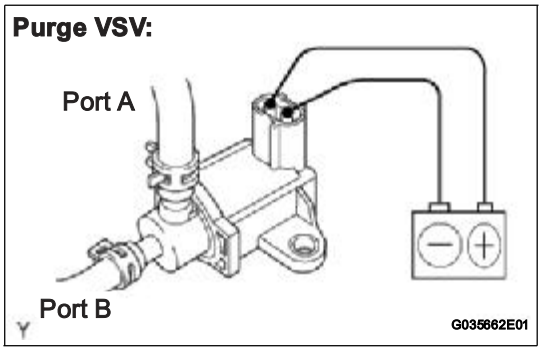

(a) Remove the purge VSV.
(b) Apply the battery voltage to the terminals of the purge VSV.
(c) Using an air gun, confirm that air flows from port A to port B.

Result

Test Results	Suspected Trouble Areas	Proceed To
Air flows	Purge VSV normal	A
No air flow	Purge VSV	B

(d) Reinstall the purge VSV.

B → **Go to step 31**

A

17 CHECK HARNESS AND CONNECTOR (POWER SOURCE OF PURGE VSV)

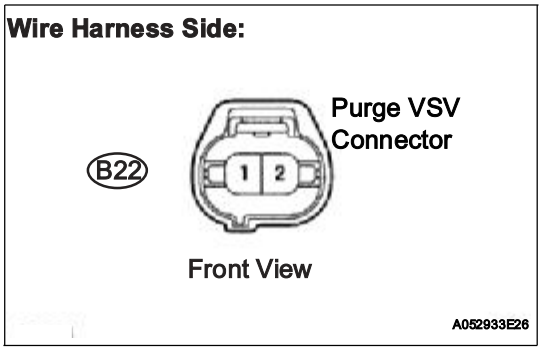

(a) Disconnect the B22 purge VSV connector.
(b) Turn the ignition switch ON.
(c) Measure the voltage between terminal 1 of the purge VSV connector and the body ground.

Result

Test Results	Suspected Trouble Areas	Proceed To
11 to 14 V	Normal	A
Other than result above	Wire harness or connectors between purge VSV and ECM	B

(d) Reconnect the purge VSV connector.

B → Go to step 32

A

18 CHECK HARNESS AND CONNECTOR (PURGE VSV - ECM)

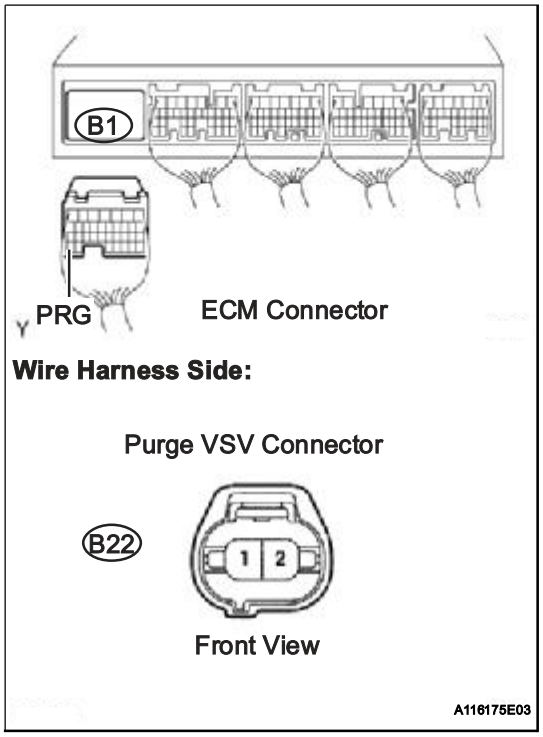

(a) Disconnect the B1 ECM connector and the B22 purge VSV connector.
(b) Check the resistance.
Standard Resistance

Tester Connections	Specified Conditions
PRG (B1-34) - Purge VSV (B22-2)	Below 1 Ω
PRG (B1-34) - Body ground	10 kΩ or higher
Purge VSV (B22-2) - Body ground	10 kΩ or higher

(c) Reconnect the purge VSV connector.
(d) Reconnect the ECM connector.

OK → Go to step 35

NG → Go to step 32

19 PERFORM ACTIVE TEST USING INTELLIGENT TESTER (FOR VENT VALVE)

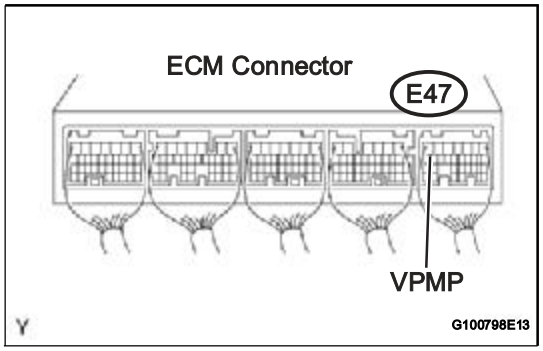

(a) Connect an intelligent tester to the DLC3.
(b) Turn the ignition switch ON and turn the tester ON.
(c) Select the following menu items: DIAGNOSIS / ENHANCED OBD II / ACTIVE TEST / VENT VALVE.
(d) Measure the voltage between terminal VPMP of the ECM connector and the body ground when the vent valve is turned ON (close) and OFF (vent) using the tester.

Result

Test Results	Suspected Trouble Areas	Proceed To
11 to 14 V when OFF Below 3 V when ON	Vent valve	A
Below 3 V when OFF and ON	ECM	B

A → Go to step 22

B → Go to step 35

20 PERFORM ACTIVE TEST USING INTELLIGENT TESTER (FOR VENT VALVE)

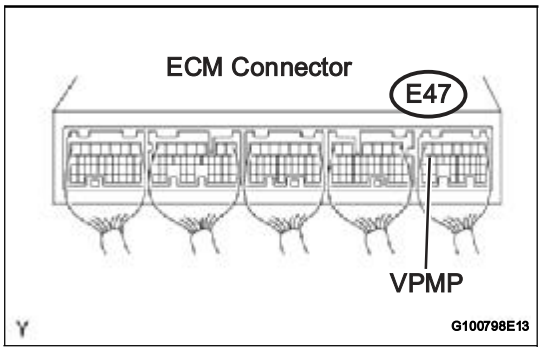

(a) Connect an intelligent tester to the DLC3.
(b) Turn the ignition switch ON and turn the tester ON.
(c) Select the following menu items: DIAGNOSIS / ENHANCED OBD II / ACTIVE TEST / VENT VALVE.
(d) Measure the voltage between terminal VPMP of the ECM connector and the body ground when the vent valve is turned ON (close) and OFF (vent) using the tester.

ES

Result

Test Results	Suspected Trouble Areas	Proceed To
Below 3 V when OFF and ON	Power source of vent valve	A
11 to 14 V when OFF Below 3 V when ON	Vent valve	B
11 to 14 V when OFF and ON	ECM	C

B → Go to step 22

C → Go to step 35

A

21 INSPECT CANISTER PUMP MODULE (POWER SOURCE FOR VENT VALVE)

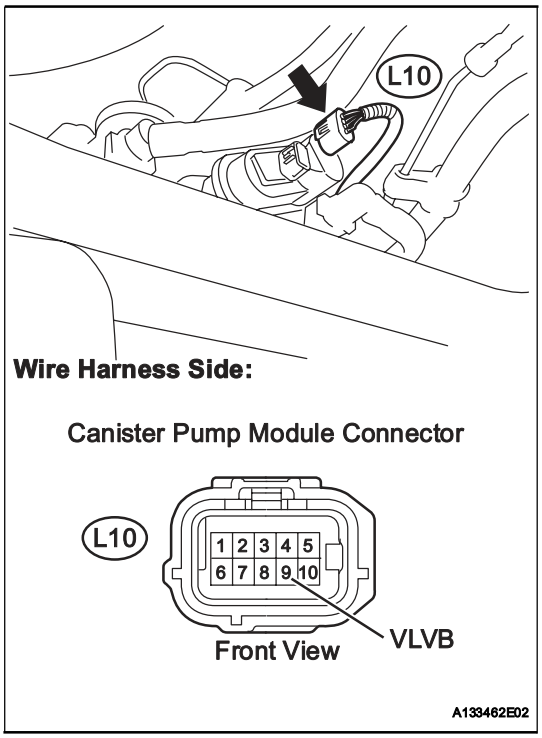

(a) Turn the ignition switch OFF.
(b) Disconnect the L10 canister connector.
(c) Turn the ignition switch ON.
(d) Measure the voltage between VLVB terminal of the canister pump module connector and the body ground.

Result

Test Results	Suspected Trouble Areas	Proceed To
11 to 14 V	Normal	A
Below 3 V	Power source wire harness of vent valve	B

(e) Reconnect the canister pump module connector.

B → Go to step 32

A

22 INSPECT CANISTER PUMP MODULE (VENT VALVE OPERATION)

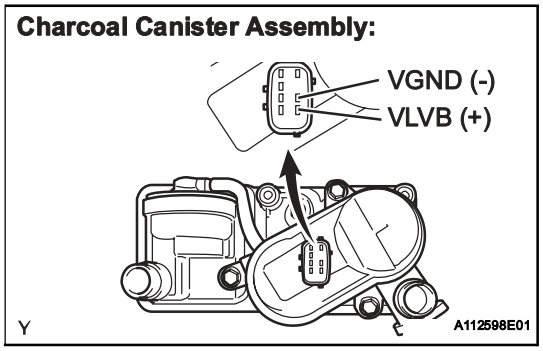

(a) Turn the ignition switch OFF.
(b) Disconnect the L10 canister pump module connector.
(c) Apply the battery voltage to VLVB and VGND terminals of the canister pump module.
(d) Touch the canister pump module to confirm the vent valve operation.

Result

Test Results	Suspected Trouble Areas	Proceed To
Operating	Wire harness between vent valve and ECM	A
Not operating	Vent valve	B

(e) Reconnect the canister pump module connector.

A → Go to step 32

B → Go to step 30

23 PERFORM ACTIVE TEST USING INTELLIGENT TESTER (FOR LEAK DETECTION PUMP)

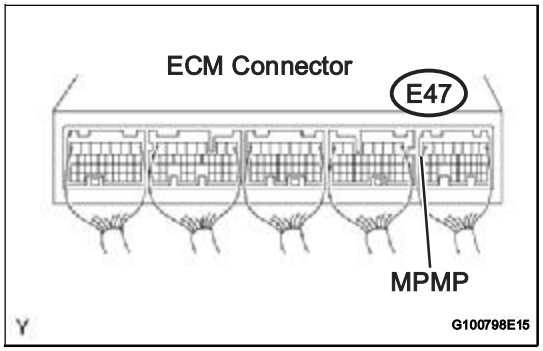

(a) Connect an intelligent tester to the DLC3.
(b) Turn the ignition switch ON and turn the tester ON.
(c) Select the following menu items: DIAGNOSIS / ENHANCED OBD II / ACTIVE TEST / VACUUM PUMP.
(d) Measure the voltage between terminal MPMP of the ECM connector and the body ground when the leak detection pump is turned ON and OFF using the tester.

Result

Test Results	Suspected Trouble Areas	Proceed To
Below 3 V when OFF 11 to 14 V when ON	ECM normal	A
11 to 14 V when OFF Below 3 V when ON	ECM	B

B → Go to step 35

A

24 CHECK HARNESS AND CONNECTOR (CANISTER PUMP MODULE - ECM)

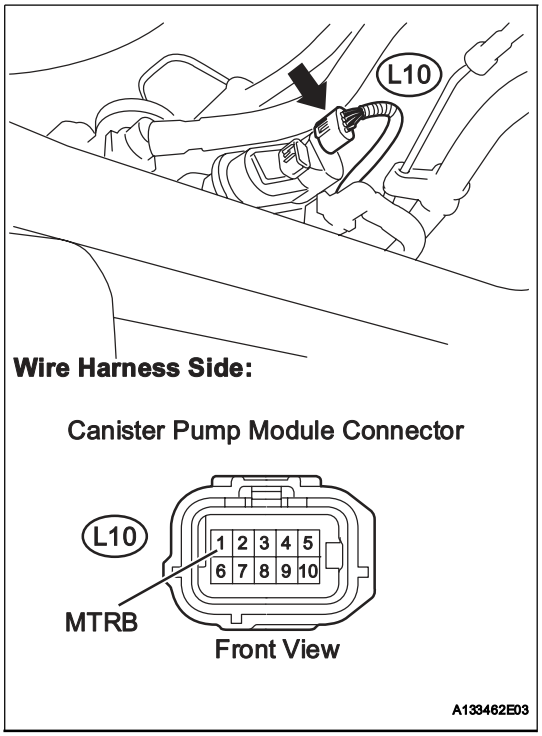

(a) Connect an intelligent tester to the DLC3.
(b) Turn the ignition switch OFF.
(c) Disconnect the L10 canister pump module connector.
(d) Turn the ignition switch ON and turn the tester ON.
(e) On the intelligent tester, select the following menu items: DIAGNOSIS / ENHANCED OBD II / ACTIVE TEST / VACUUM PUMP.
(f) Turn the leak detection pump ON.
(g) Measure the voltage between MTRB terminal of the canister pump module connector and the body ground.

Result

Test Results	Suspected Trouble Areas	Proceed To
11 to 14 V	Normal	A
Below 3 V	Wire harness between ECM and leak detection pump	B

(h) Reconnect the canister pump module connector.

B → Go to step 32

A

25 CHECK HARNESS AND CONNECTOR (CANISTER PUMP MODULE - GROUND)

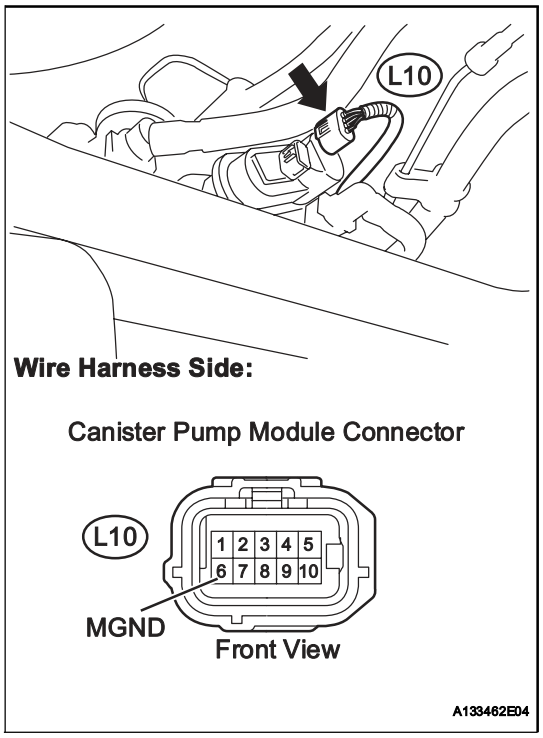

(a) Disconnect the L10 canister pump module connector.
(b) Turn the ignition switch OFF.
(c) Check the resistance between MGND terminal of the canister pump module connector and the body ground.

Result

Test Results	Suspected Trouble Areas	Proceed To
Below 1 Ω	Leak detection pump	A
10 kΩ or more	Wire harness between leak detection pump and body ground	B

(d) Reconnect the canister pump module connector.

A	Go to step 30
B	Go to step 32

26 INSPECT INTAKE AIR SURGE TANK (EVAP PURGE PORT)

(a) Stop the engine.
(b) Disconnect the EVAP hose from the intake air surge tank.
(c) Start the engine.
(d) Use your finger to confirm that the port of the intake air surge tank has suction.

Result

Test Results	Suspected Trouble Areas	Proceed To
Suction applied	EVAP hose between intake air surge tank and purge VSV	A
No suction	Intake air surge tank	B

(e) Reconnect the EVAP hose.

A	Go to step 33

B	Go to step 34

27	CORRECTLY REINSTALL OR REPLACE FUEL CAP ASSEMBLY

HINT:
- When reinstalling the fuel cap, tighten it until a few click sounds are heard.
- When replacing the fuel cap, use a fuel cap that meets OEM specifications, and install it until a few click sounds are heard.

NEXT	Go to step 37

ES

28	REPLACE FUEL CAP ASSEMBLY

HINT:
When installing the fuel cap, tighten it until a few click sounds are heard.

NEXT	Go to step 37

29	LOCATE EVAP LEAK PART

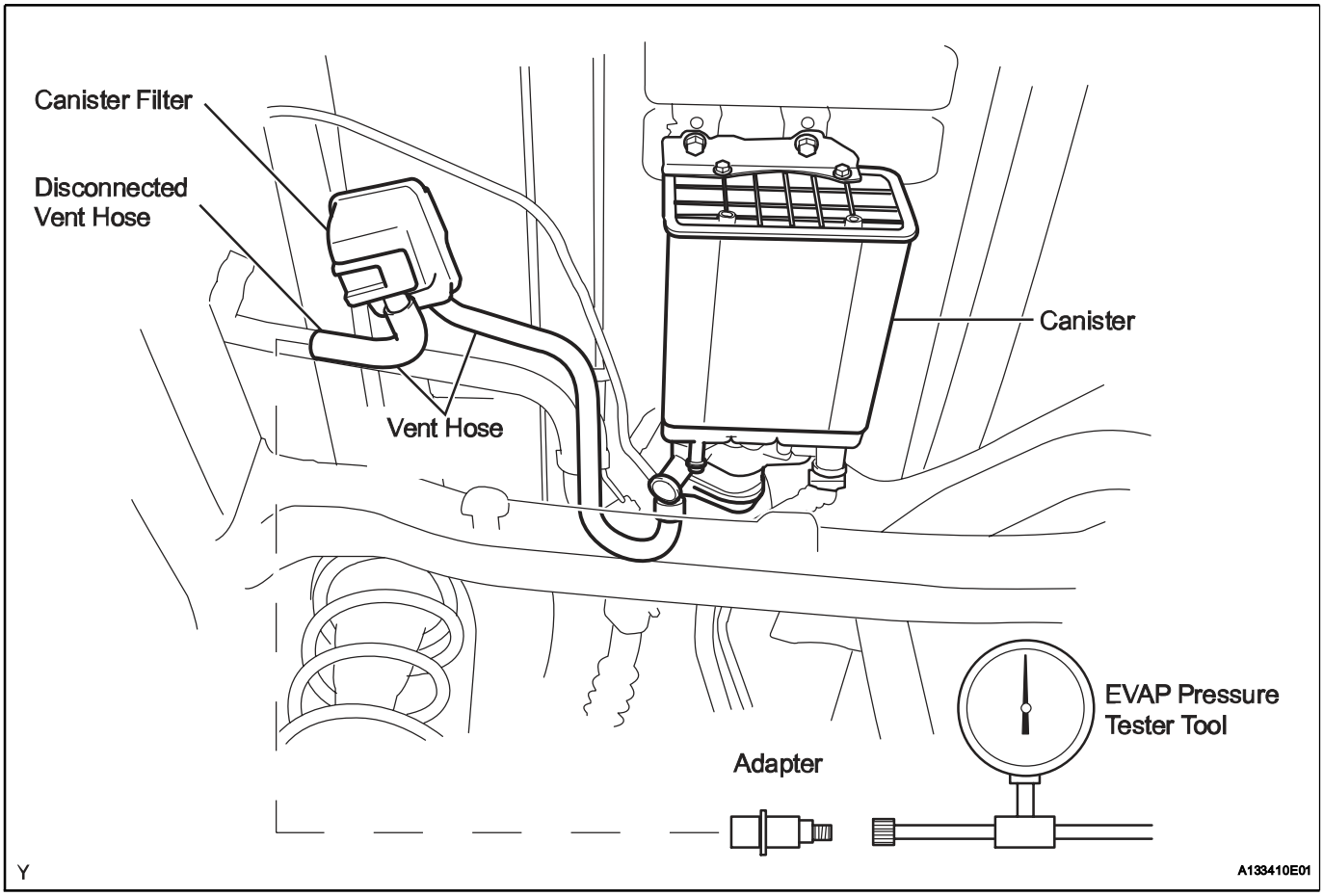

(a) Disconnect the vent hose.

(b) Connect the EVAP pressure tester tool to the canister with the adapter.
(c) Pressurize the EVAP system to 3.2 to 3.7 kPa (24 to 28 mmHg).
(d) Apply soapy water to the piping and connecting parts of the EVAP system.
(e) Look for areas where bubbles appear. This indicates the leak point.
(f) Repair or replace the leak point.

HINT:
Disconnect the hose between the canister and the fuel tank from the canister. Block the canister side and conduct an inspection. In this way, the fuel tank can be excluded as an area suspected of causing fuel leaks.

NEXT	Go to step 37

30	REPLACE CANISTER ASSEMBLY

(a) Replace the canister assembly (See page EC-9).

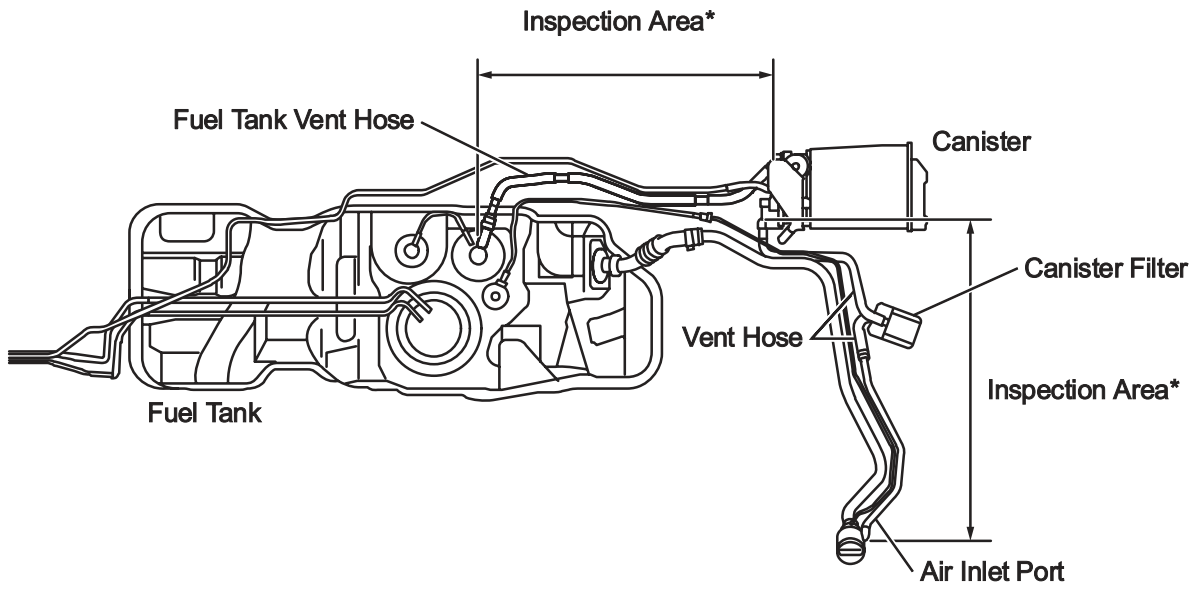

*: Check for disconnection and/or cracks

Y A112652E01

NOTICE:
When replacing the canister, check the canister pump module interior and related pipes for water, fuel and other liquids. If liquids are present, check for disconnections and/or cracks in the following: 1) the pipe from the air inlet port to the canister pump module: 2) the canister filter; and 3) the fuel tank vent hose.

NEXT → **Go to step 37**

ES

31 REPLACE VACUUM SWITCHING VALVE ASSEMBLY NO. 1 (PURGE VSV)

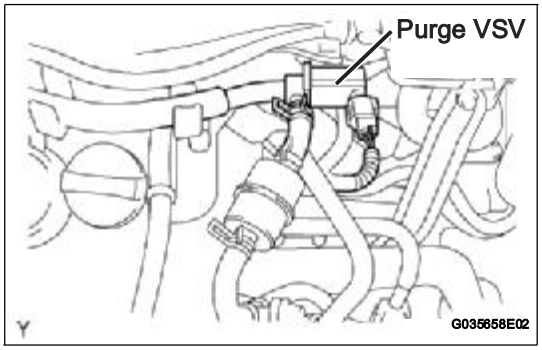

(a) Disconnect the connector and the hoses from the purge VSV.
(b) Remove the purge VSV.
(c) Install a new purge VSV.
(d) Reconnect the connector and hoses.

NEXT → **Go to step 37**

32 REPAIR OR REPLACE HARNESS OR CONNECTOR

NEXT → **Go to step 37**

33 REPLACE EVAP HOSE (INTAKE AIR SURGE TANK - PURGE VSV)

NEXT → **Go to step 37**

34 INSPECT INTAKE AIR SURGE TANK

(a) Check that the EVAP purge port of the intake air surge tank is not clogged. If necessary, replace the intake air surge tank.

NEXT → **Go to step 37**

35 REPLACE ECM

(a) Replace the ECM (See page ES-446).

NEXT → **Go to step 37**

36	REPAIR OR REPLACE PARTS AND COMPONENTS INDICATED BY OUTPUT DTCS

(a) Repair the malfunctioning areas indicated by the DTCs that had been confirmed when the vehicle was brought in.

NEXT → Go to step 37

37	PERFORM EVAP SYSTEM CHECK (AUTO OPERATION)

NOTICE:
- **The EVAP SYSTEM CHECK (AUTO OPERATION) consists of five steps performed automatically by the intelligent tester. It takes a maximum of approximately 18 minutes.**
- **Do not perform the EVAP SYSTEM CHECK when the fuel tank is more than 90 % full because the cut-off valve may be closed, making the fuel tank leak check unavailable.**
- **Do not run the engine during this operation.**
- **When the temperature of the fuel is 35°C (95°F) or more, a large amount of vapor forms and any check results become inaccurate. When performing an EVAP SYSTEM CHECK, keep the temperature below 35°C (95°F).**

(a) Clear DTCs (See page ES-38).
(b) Select the following menu items: DIAGNOSIS / ENHANCED OBD II / SYSTEM CHECK / EVAP SYS CHECK / AUTO OPERATION.
(c) After the SYSTEM CHECK is completed, check for pending DTCs by selecting the following menu items: DIAGNOSIS / ENHANCED OBD II / DTC INFO / PENDING CODES.
HINT:
If no pending DTCs are found, the repair has been successfully completed.

NEXT

COMPLETED

CONFIRMATION DRIVING PATTERN

HINT:
After a repair, check the Monitor Status by performing the Key-Off Monitor Confirmation and Purge Flow Monitor Confirmation described below.

1. **Key-off monitor confirmation**
   (a) Preconditions
   The monitor will not run unless:
   - The vehicle has been driven for 10 minutes or more (in a city area or on a free way)
   - The fuel tank is less than 90 % full
   - The altitude is less than 8,000 ft (2,400 m)
   - The Engine Coolant Temperature (ECT) is between 4.4°C and 35°C (40°F and 95°F)

- The Intake Air Temperature (IAT) is between 4.4°C and 35°C (40°F and 95°F)
- The vehicle remains stationary (the vehicle speed is 0 mph [0 km/h])

(b) Monitor Conditions
1. Allow the engine to idle for at least 5 minutes.
2. Turn the ignition switch OFF and wait for 6 hours (8 or 10.5 hours).
   HINT:
   Do not start the engine until checking MONITOR STATUS. If the engine is started, the steps described above must be repeated.

(c) Monitor Status
1. Connect an intelligent tester to the DLC3.
2. Turn the ignition switch ON and turn the tester ON.
3. Select the following menu items: DIAGNOSIS / ENHANCED OBD II / MONITOR STATUS.
4. Check the Monitor Status displayed on the tester.
   HINT:
   If INCMP is displayed, the monitor is not completed. Make sure that the preconditions have been met, and perform the Monitor Conditions again.

2. Purge flow monitor confirmation (P0441)

HINT:
Perform this monitor confirmation after the Key-Off Monitor Confirmation shows COMPL (complete).

(a) Preconditions
The monitor will not run unless:
- The vehicle has been driven for 10 minutes or more (in a city area or on a free way)
- The ECT is between 4.4°C and 35°C (40°F and 95°F)
- The IAT is between 4.4°C and 35°C (40°F and 95°F)

(b) Monitor Conditions
1. Release the pressure from the fuel tank by removing and reinstalling the fuel cap.
2. Warm the engine up until the ECT reaches more than 75°C (167°F).
3. Increase the engine speed to 3,000 rpm once.
4. Allow the engine to idle and turn A/C ON for 1 minute.

(c) Monitor Status
1. Turn the ignition switch OFF (where ON or the engine is running).
2. Connect an intelligent tester to the DLC3.
3. Turn the ignition switch ON and turn the tester ON.
4. Select the following menu items: DIAGNOSIS / ENHANCED OBD II / MONITOR STATUS.
5. Check the Monitor Status displayed on the tester.
   HINT:
   If INCMP is displayed, the monitor is not completed. Make sure that the preconditions have been met, and perform the Monitor Conditions again.

MONITOR RESULT

Refer to CHECKING MONITOR STATUS (See page ES-20).

The test value and test limit information are described in the following table. This information is included under MONITOR RESULT in the emissions-related DTC sections:
- MID (Monitor Identification Data) is assigned to each emissions-related component.
- TID (Test Identification Data) is assigned to each test value.
- Scaling is used to calculate the test value indicated on generic OBD II scan tools.

EVAP - Key-off Type

MID	TID	Scaling	Unit	Description
$3D	$C9	Multiply by 0.001	kPa	Test value for small leak (P0456) Refer to pressure D*
$3D	$CA	Multiply by 0.001	kPa	Test value for gross leak (P0455) Refer to pressure E*
$3D	$CB	Multiply by 0.001	kPa	Test value for leak detection pump stuck OFF (P2401) Refer to pressure A*

MID	TID	Scaling	Unit	Description
$3D	$CD	Multiply by 0.001	kPa	Test value for leak detection pump stuck ON (P2402) Refer to pressure A*
$3D	$CE	Multiply by 0.001	kPa	Test value for vent valve stuck OFF (vent) (P2420) Refer to pressure C*
$3D	$CF	Multiply by 0.001	kPa	Test value for vent valve stuck ON (P2419) Refer to pressure A*
$3D	$D0	Multiply by 0.001	kPa	Test value for reference orifice low flow (P043E) Refer to pressure B*
$3D	$D1	Multiply by 0.001	kPa	Test value for reference orifice high flow (P043F) Refer to pressure A*
$3D	$D4	Multiply by 0.001	kPa	Test value for purge VSV stuck closed (P0441) Refer to pressure F*
$3D	$D5	Multiply by 0.001	kPa	Test value for purge VSV stuck open (P0441) Refer to pressure E*
$3D	$D7	Multiply by 0.001	kPa	Test value for purge flow insufficient (P0441) Refer to pressure G*

* Pressures A to G are indicated in the diagram below.

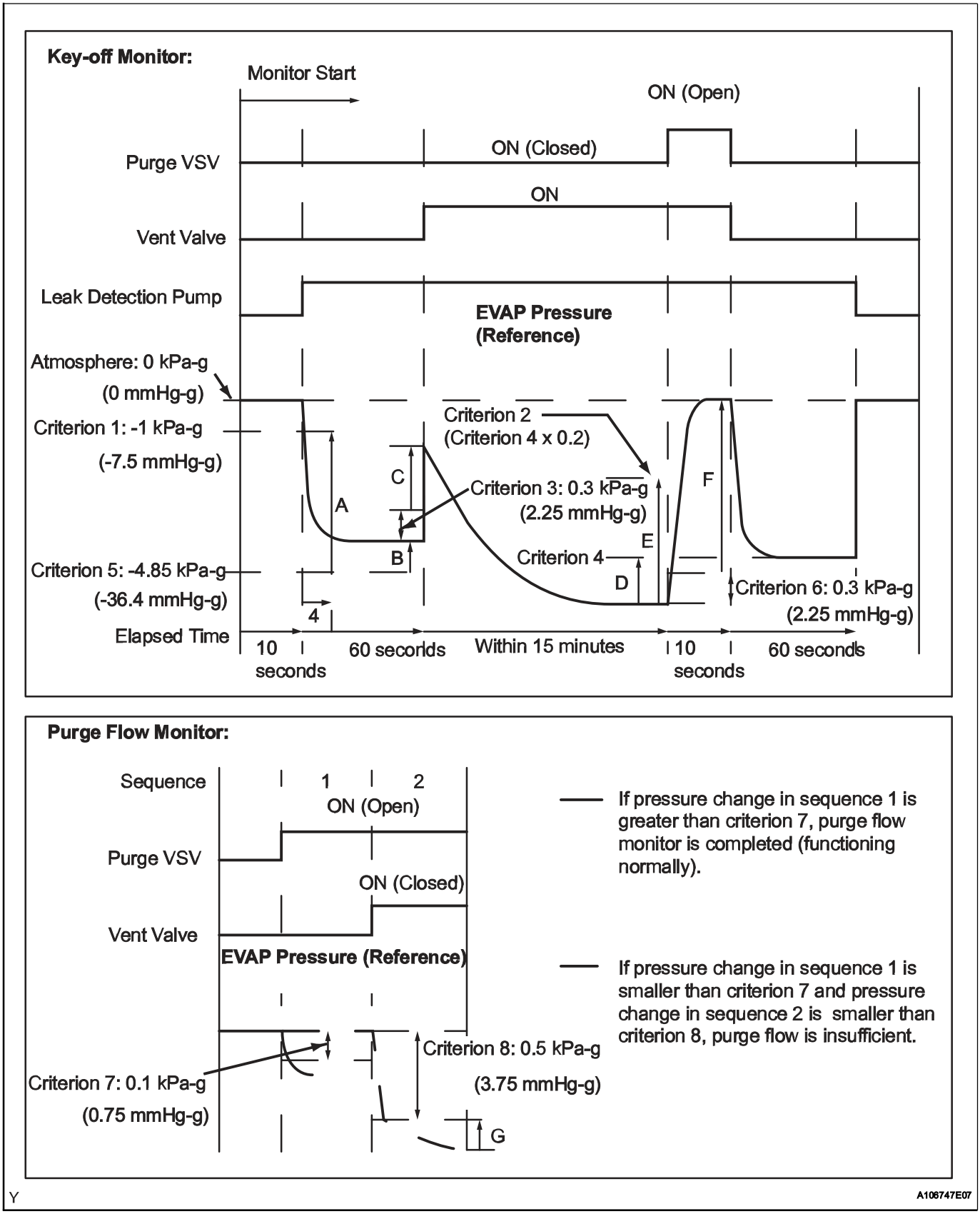
Key-off Monitor:
Monitor Start
ON (Open)
ON (Closed)
Purge VSV
ON
Vent Valve
Leak Detection Pump
EVAP Pressure
(Reference)
Atmosphere: 0 kPa-g
(0 mmHg-g)
Criterion 1: -1 kPa-g
(-7.5 mmHg-g)
Criterion 2
(Criterion 4 x 0.2)
Criterion 3: 0.3 kPa-g
(2.25 mmHg-g)
Criterion 4
Criterion 5: -4.85 kPa-g
(-36.4 mmHg-g)
Criterion 6: 0.3 kPa-g
(2.25 mmHg-g)
A
B
C
D
E
F
4
Elapsed Time
10 seconds
60 seconds
Within 15 minutes
10 seconds
60 seconds
Purge Flow Monitor:
Sequence
1
2
ON (Open)
Purge VSV
ON (Closed)
Vent Valve
EVAP Pressure (Reference)
Criterion 7: 0.1 kPa-g
(0.75 mmHg-g)
Criterion 8: 0.5 kPa-g
(3.75 mmHg-g)
G
If pressure change in sequence 1 is greater than criterion 7, purge flow monitor is completed (functioning normally).
If pressure change in sequence 1 is smaller than criterion 7 and pressure change in sequence 2 is smaller than criterion 8, purge flow is insufficient.
Y
A106747E07

ECM Power Source Circuit

DESCRIPTION

When the ignition switch is turned ON, the battery voltage is applied to terminal IGSW of the ECM. The ECM MREL output signal causes a current to flow to the coil, closing the contacts of the EFI relay and supplying power to terminal +B of the ECM.
If the ignition switch is turned OFF, the ECM holds the EFI relay ON for a maximum of 2 seconds to allow for the initial setting of the throttle valve.

WIRING DIAGRAM

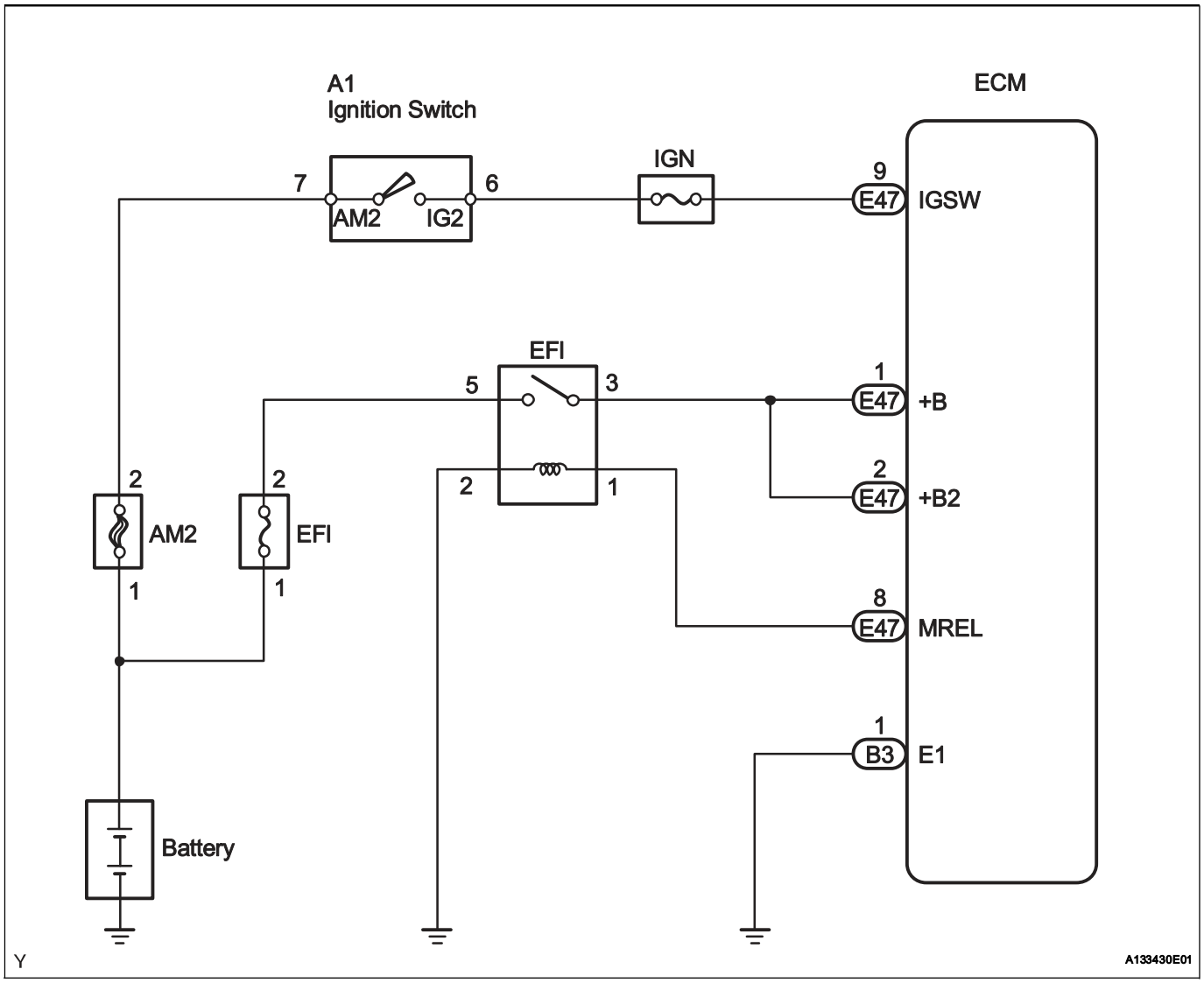

INSPECTION PROCEDURE

1 INSPECT ECM (+B VOLTAGE)

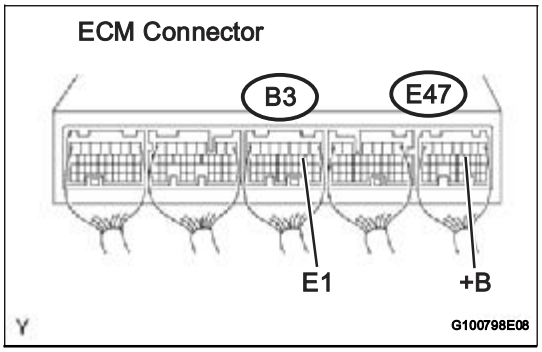

(a) Turn the ignition switch ON.
(b) Measure the voltage between the terminals of the E47 and B3 ECM connectors.
Standard Voltage

Tester Connections	Specified Conditions
+B (E47-1) - E1 (B3-1)	11 to 14 V

OK → **PROCEED TO NEXT CIRCUIT INSPECTION SHOWN IN PROBLEM SYMPTOMS TABLE**

NG

2 CHECK HARNESS AND CONNECTOR (ECM - BODY GROUND)

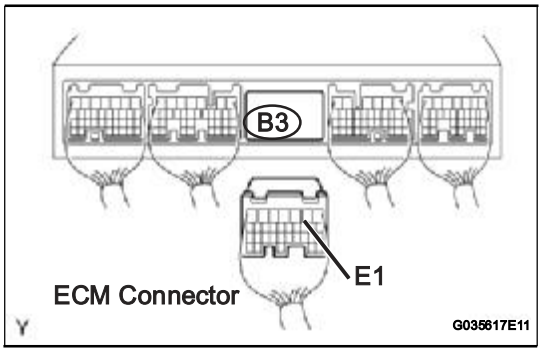

(a) Disconnect the B3 ECM connector.
(b) Check the resistance.
Standard Resistance (Check for open)

Tester Connections	Specified Conditions
E1 (B3-1) - Body ground	Below 1 Ω

(c) Reconnect the ECM connector.

NG → **REPAIR OR REPLACE HARNESS OR CONNECTOR**

OK

3 INSPECT ECM (IGSW VOLTAGE)

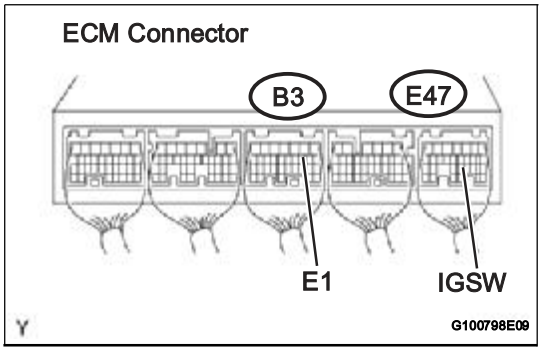

(a) Turn the ignition switch ON.
(b) Measure the voltage between the terminals of the E47 and B3 ECM connectors.
Standard Voltage

Tester Connections	Specified Conditions
IGSW (E47-9) - E1 (B3-1)	11 to 14 V

OK → **Go to step 6**

NG

ES

4 CHECK FUSE (IGN FUSE)

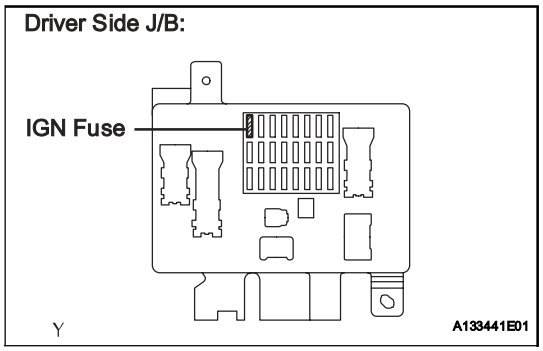

(a) Remove the IGN fuse from the driver side J/B.
(b) Check the IGN fuse resistance.
Standard Resistance:
Below 1 Ω
(c) Reinstall the IGN fuse.

NG → **CHECK FOR SHORT IN ALL HARNESSES AND CONNECTORS CONNECTED TO FUSE AND REPLACE FUSE**

OK

5 INSPECT IGNITION OR STARTER SWITCH ASSEMBLY

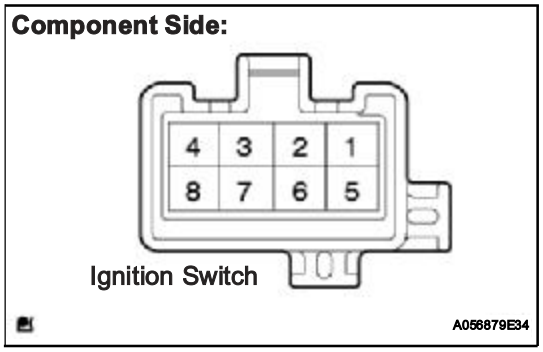

(a) Disconnect the A1 ignition switch connector.
(b) Check the resistance.
Standard Resistance

Ignition Switch Positions	Tester Connections	Specified Conditions
LOCK	All Terminals	10 kΩ or higher
ACC	2 - 4	Below 1 Ω
ON	1 - 2, 1 - 4, 5 - 6	
START	1 - 3, 1 - 4, 3 - 4, 5 - 6, 5 - 7, 6 - 7	

(c) Reconnect the ignition switch connector.

NG → **REPLACE IGNITION OR STARTER SWITCH ASSEMBLY (See page ST-19)**

OK

CHECK AND REPLACE HARNESS AND CONNECTOR (BATTERY - IGNITION SWITCH, IGNITION SWITCH - ECM)

6 INSPECT ECM (MREL VOLTAGE)

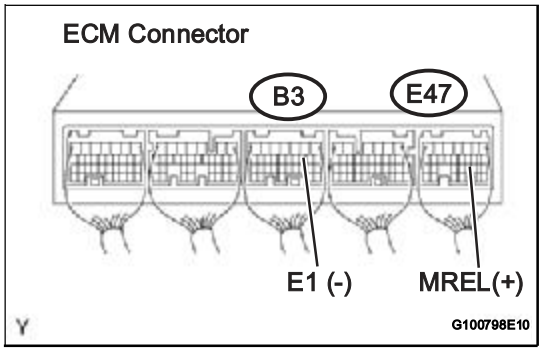

(a) Turn the ignition switch ON.
(b) Measure the voltage between the terminals of the B3 and E47 ECM connectors.
Standard Voltage

Tester Connections	Specified Conditions
MREL (E47-8) - E1 (B3-1)	11 to 14 V

NG → **REPLACE ECM (See page ES-446)**

ES

OK

7 CHECK FUSE (EFI FUSE)

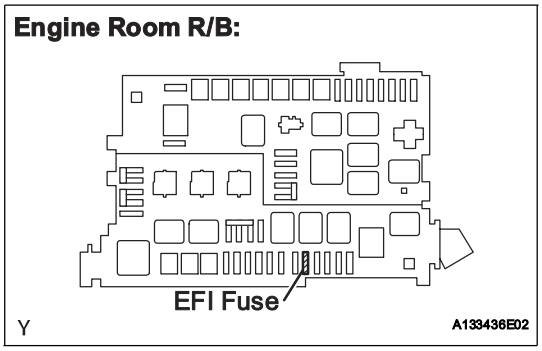

(a) Remove the EFI fuse from the engine room R/B.
(b) Check the EFI fuse resistance.
Standard Resistance:
Below 1 Ω
(c) Reinstall the EFI fuse.

NG → **CHECK FOR SHORT IN ALL HARNESSES AND CONNECTORS CONNECTED TO FUSE AND REPLACE FUSE**

OK

8 INSPECT EFI RELAY

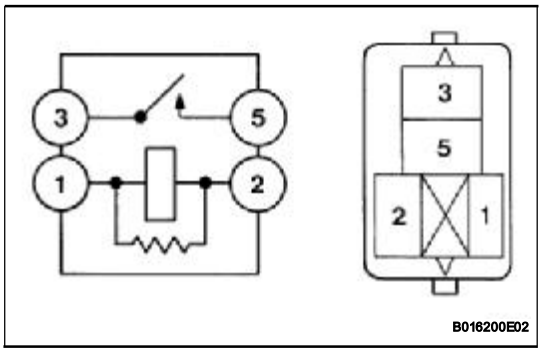

(a) Remove the EFI relay from the engine room R/B.
(b) Check the EFI relay resistance.
Standard Resistance

Tester Connections	Specified Conditions
3 - 5	10 kΩ or higher
	Below 1 Ω (when battery voltage applied to terminals 1 and 2)

(c) Reinstall the EFI relay.

NG → **REPLACE EFI RELAY**

OK

9	CHECK HARNESS AND CONNECTOR (EFI RELAY- ECM, EFI RELAY - BODY GROUND)

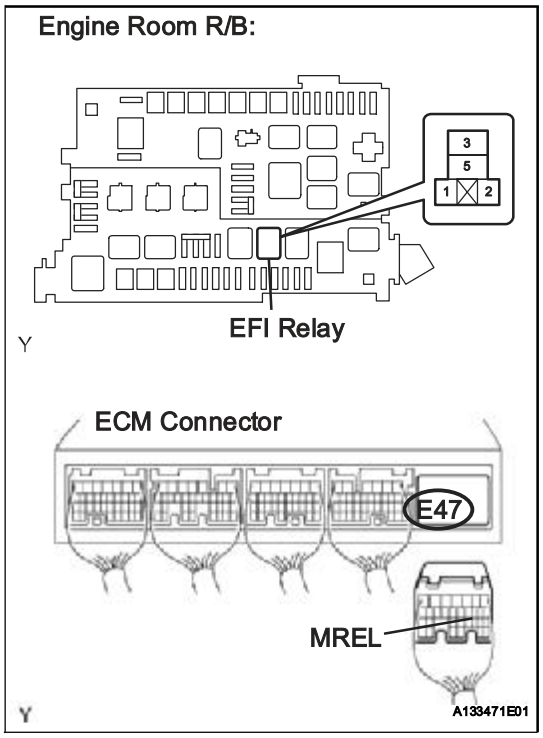

(a) Check the harness and connector between the EFI relay and ECM.
  (1) Remove the EFI relay from the engine room R/B.
  (2) Disconnect the E47 ECM connector.
  (3) Check the resistance.

Standard Resistance (Check for open)

Tester Connections	Specified Conditions
EFI relay (1) - MREL (E47-8)	Below 1 Ω

Standard Resistance (Check for short)

Tester Connections	Specified Conditions
EFI relay (1) or MREL (E47-8) - Body ground	10 kΩ or higher

  (4) Reinstall the EFI relay.
  (5) Reconnect the ECM connector.

(b) Check the harness and connector between the EFI relay and body ground.
  (1) Remove the EFI relay from the engine room R/B.
  (2) Check the resistance.

Standard Resistance (Check for open)

Tester Connections	Specified Conditions
EFI relay (2) - Body ground	Below 1 Ω

  (3) Reinstall the EFI relay.

NG → **REPAIR OR REPLACE HARNESS OR CONNECTOR**

OK

CHECK AND REPAIR HARNESS AND CONNECTOR (TERMINAL +B OF ECM - BATTERY POSITIVE TERMINAL)

VC Output Circuit

DESCRIPTION

The ECM constantly generates 5 V power from the battery voltage supplied to the +B (BATT) terminal to operate the microprocessor. The ECM also provides this power to the sensors through the VC output circuit.

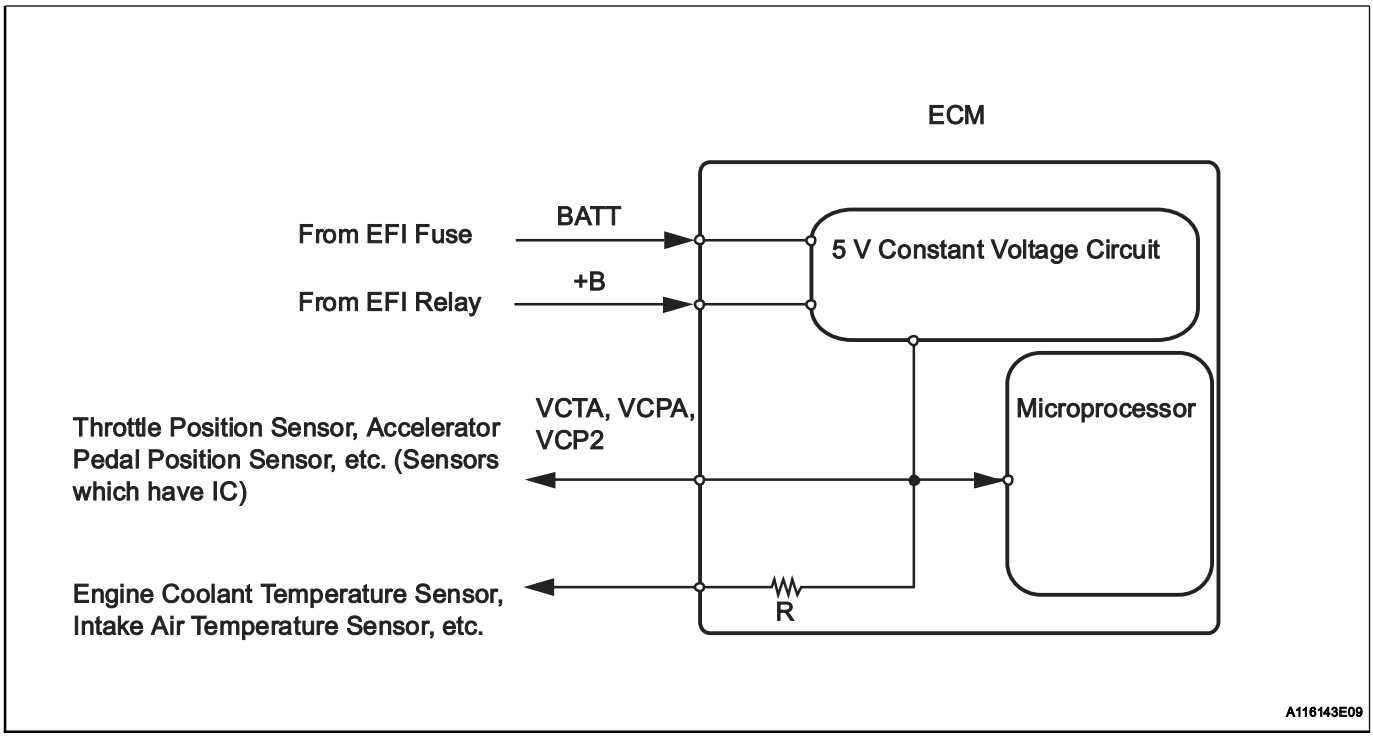

When the VC circuit is short-circuited, the microprocessor in the ECM and sensors that are supplied power through the VC circuit are inactivated because the power is not supplied from the VC circuit. Under this condition, the system does not start up and the MIL does not illuminate even if the system malfunctions.

HINT:

Under normal conditions, the MIL is illuminated for several seconds when the ignition switch is first turned ON. The MIL goes off when the engine is started.

WIRING DIAGRAM

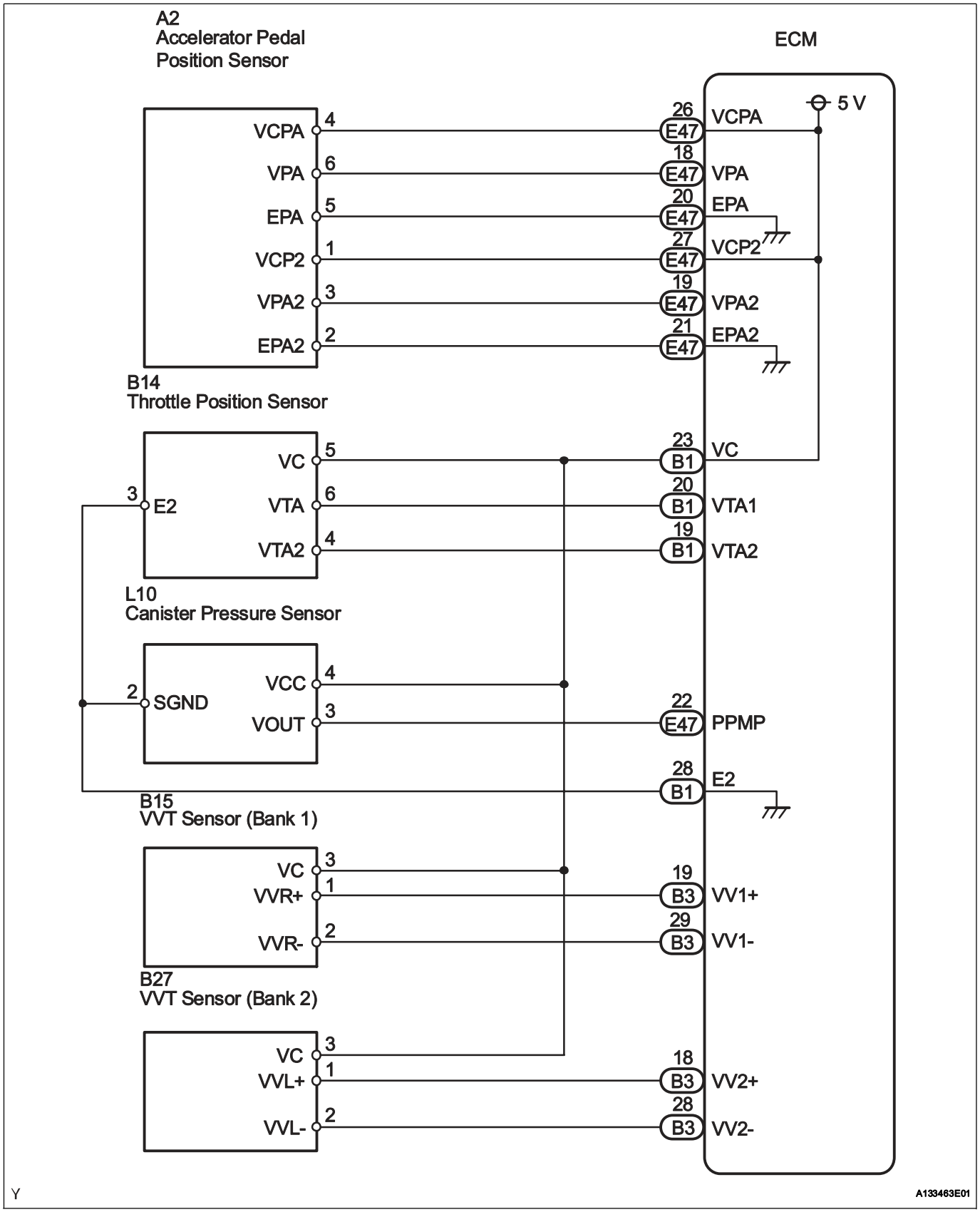

INSPECTION PROCEDURE

1	CHECK MIL

(a) Check that the Malfunction Indicator Lamp (MIL) lights up when turning the ignition switch ON.
OK:
MIL lights up

OK → **SYSTEM OK**

NG

ES

2	CHECK COMMUNICATION BETWEEN INTELLIGENT TESTER AND ECM

(a) Connect an intelligent tester to the DLC3.
(b) Turn the ignition switch ON and turn the tester ON.
(c) Check the communication between an intelligent tester and ECM.
Result

Result	Proceed to
Communication is possible	A
Communication is not possible	B

A → **GO TO MIL CIRCUIT (See page ES-404)**

B

3	CHECK MIL (THROTTLE BODY)

(a) Disconnect the throttle body connector.
(b) Turn the ignition switch ON.
(c) Check the MIL.
Result

Result	Proceed to
MIL illuminates	A
MIL does not illuminate	B

(d) Reconnect the throttle body connector.

A → **REPLACE THROTTLE WITH MOTOR BODY ASSEMBLY (See page ES-428)**

B

4	CHECK MIL (ACCELERATOR PEDAL)

(a) Disconnect the accelerator pedal connector.
(b) Turn the ignition switch ON.
(c) Check the MIL.

Result

Result	Proceed to
MIL illuminates	A
MIL does not illuminate	B

(d) Reconnect the accelerator pedal connector.

A → **REPLACE ACCELERATOR PEDAL ROD ASSEMBLY (See page ES-449)**

B

5 CHECK MIL (CANISTER PUMP MODULE)

(a) Disconnect the canister pump module connector.
(b) Turn the ignition switch ON.
(c) Check the MIL.

Result

Result	Proceed to
MIL illuminates	A
MIL does not illuminate	B

(d) Reconnect the canister pump module connector.

A → **REPLACE CHARCOAL CANISTER ASSEMBLY (See page EC-9)**

B

6 CHECK MIL (VVT SENSOR FOR BANK 1)

(a) Disconnect the VVT sensor (bank 1) connector.
(b) Turn the ignition switch ON.
(c) Check the MIL.

Result

Result	Proceed to
MIL illuminates	A
MIL does not illuminate	B

(d) Reconnect the VVT sensor connector.

A → **REPLACE VVT SENSOR FOR BANK 1 (See page ES-417)**

B

7 CHECK MIL (VVT SENSOR FOR BANK 2)

(a) Disconnect the VVT sensor (bank 2) connector.
(b) Turn the ignition switch ON.
(c) Check the MIL.

Result

Result	Proceed to
MIL illuminates	A
MIL does not illuminate	B

(d) Reconnect the VVT sensor connector.

A → **REPLACE VVT SENSOR FOR BANK 2 (See page ES-417)**

B

ES

8 CHECK HARNESS AND CONNECTOR (VC OUTPUT CIRCUIT)

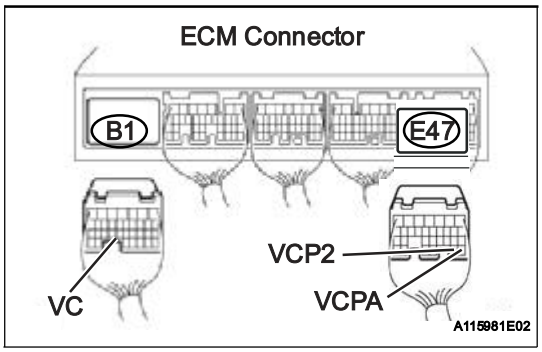

(a) Disconnect the throttle body connector.
(b) Disconnect the accelerator pedal connector.
(c) Disconnect the canister pump module connector.
(d) Disconnect the ECM connector.
(e) Check the resistance.

Standard Resistance (Check for short)

Tester Connections	Specified Conditions
VC (B1-23) - Body ground	10 kΩ or higher
VCPA (E47-26) - Body ground	
VCP2 (E47-27) - Body ground	

(f) Reconnect the throttle body connector.
(g) Reconnect the accelerator pedal connector.
(h) Reconnect the canister pump module connector.
(i) Reconnect the ECM connector.

NG → **REPAIR OR REPLACE HARNESS OR CONNECTOR**

OK

REPLACE ECM (See page ES-446)

Fuel Pump Control Circuit

DESCRIPTION

Refer to DTC P0230 (See page ES-164).

WIRING DIAGRAM

Refer to DTC P0230 (See page ES-166).

INSPECTION PROCEDURE

ES

1	CHECK FUEL PUMP OPERATION

(a) Check if there is pressure in the fuel inlet hose.
HINT:
If there is fuel pressure, you will hear the sound of fuel flowing.

OK → **Go to step 10**

NG ↓

2	PERFORM ACTIVE TEST USING INTELLIGENT TESTER (OPERATE CIRCUIT OPENING RELAY)

(a) Connect an intelligent tester to the DLC3.
(b) Turn the ignition switch ON and turn the tester ON.
(c) Select the following menu items: DIAGNOSIS / ENHANCED OBD II / ACTIVE TEST / FUEL PUMP/ SPD.
(d) Check whether operating sounds can be heard while operating the relay using the tester.
OK:
Operating sounds can be heard from relay.

OK → **Go to step 5**

NG ↓

3	INSPECT CIRCUIT OPENING RELAY

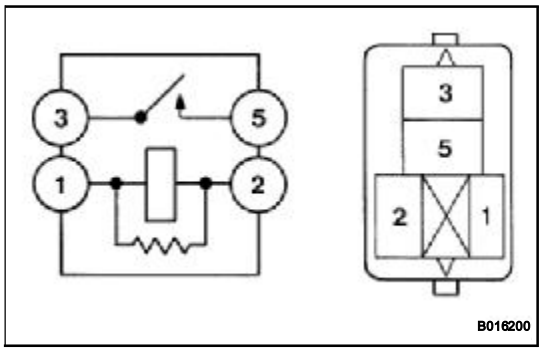

(a) Remove the circuit opening relay from the engine room R/B.
(b) Check the circuit opening relay resistance.
Standard Resistance

Tester Connections	Specified Conditions
3 - 5	10 kΩ or higher
3 - 5	Below 1 Ω (when battery voltage applied to terminals 1 and 2)

(c) Reinstall the circuit opening relay.

NG → **REPLACE CIRCUIT OPENING RELAY**

OK

4 INSPECT ECM (FC VOLTAGE)

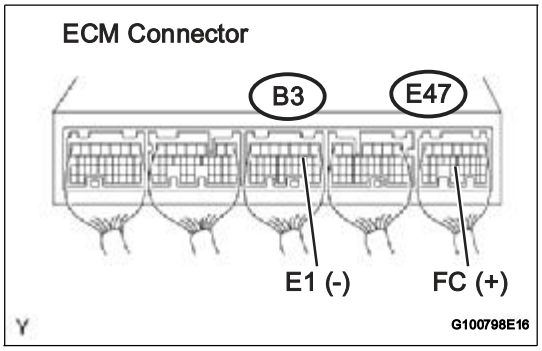

(a) Turn the ignition switch ON.
(b) Measure the voltage between the terminals of the B3 and E47 ECM connectors.
Standard Voltage

Tester Connections	Specified Conditions
FC (E47-10) - E1 (B3-1)	11 to 14 V

OK → **REPLACE ECM (See page ES-446)**

NG

CHECK AND REPLACE HARNESS AND CONNECTOR (ECM - CIRCUIT OPENING RELAY - IGNITION SWITCH)

5 INSPECT ECM POWER SOURCE CIRCUIT

Inspect the ECM power source circuit (See page ES-384).

NG → **REPAIR OR REPLACE HARNESS OR CONNECTOR**

OK

6 INSPECT FUEL PUMP RELAY ASSEMBLY

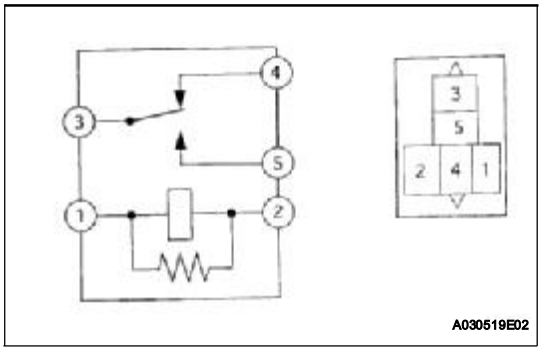

(a) Remove the fuel pump relay from the engine room R/B.
(b) Check the fuel pump relay resistance.
Standard Resistance

Tester Connections	Specified Conditions
3 - 4	Below 1 Ω
3 - 5	10 kΩ or higher
3 - 4	10 kΩ or higher (when battery voltage applied to terminals 1 and 2)
3 - 5	Below 1 Ω (when battery voltage applied to terminals 1 and 2)

(c) Reinstall the fuel pump relay.

NG → **REPLACE FUEL PUMP RELAY ASSEMBLY**

OK

7 INSPECT FUEL PUMP ASSEMBLY

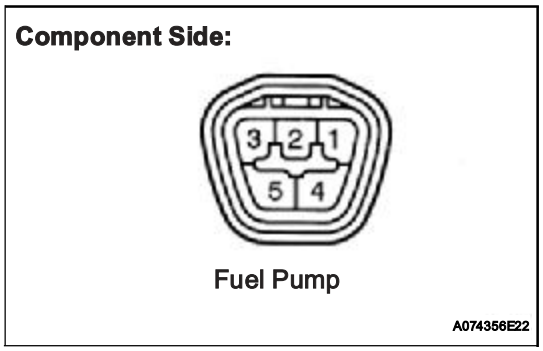

(a) Inspect the fuel pump resistance.
  (1) Measure the resistance between terminals 4 and 5.
  Standard Resistance:
  0.2 to 3.0 Ω at 20°C (68°F)

(b) Inspect the fuel pump operation.
  (1) Apply battery voltage to both terminals. Check that the pump operates.
  NOTICE:
  - **These tests must be done quickly (within 10 seconds) to prevent the coil from burning out.**
  - **Keep the fuel pump as far away from the battery as possible.**
  - **Always do the switching at the battery side.**

NG → **REPLACE FUEL PUMP ASSEMBLY (See page FU-27)**

OK

8 CHECK HARNESS AND CONNECTOR (FUEL PUMP - FUEL PUMP RELAY, FUEL PUMP - BODY GROUND)

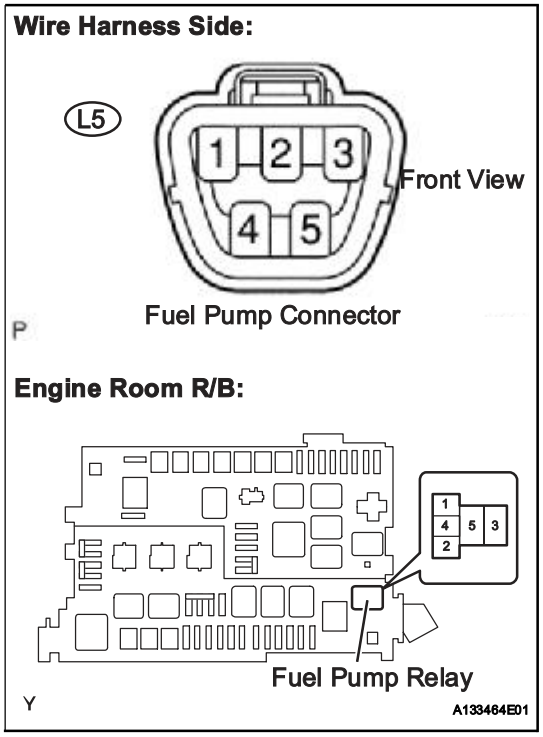

(a) Check the harness and connector between the fuel pump and fuel pump relay.
  (1) Disconnect the L5 fuel pump connector.
  (2) Remove the fuel pump relay from the engine room R/B.
  (3) Check the resistance.
  Standard Resistance (Check for open)

Tester Connections	Specified Conditions
Fuel pump (L5-4) - Fuel pump relay (4)	Below 1 Ω

Standard Resistance (Check for short)

Tester Connections	Specified Conditions
Fuel pump (L5-4) or Fuel pump relay (4) - Body ground	10 kΩ or higher

  (4) Reconnect the fuel pump connector.
  (5) Reinstall the fuel pump relay.

(b) Check the harness and connector between the fuel pump and body ground.
  (1) Disconnect the fuel pump connector.
  (2) Check the resistance.
  Standard Resistance (Check for open)

Tester Connections	Specified Conditions
Fuel pump (L5-5) - Body ground	Below 1 Ω

  (3) Reconnect the fuel pump connector.

NG → **REPAIR OR REPLACE HARNESS OR CONNECTOR**

OK

9 CHECK HARNESS AND CONNECTOR (CIRCUIT OPENING RELAY - FUEL PUMP RELAY)

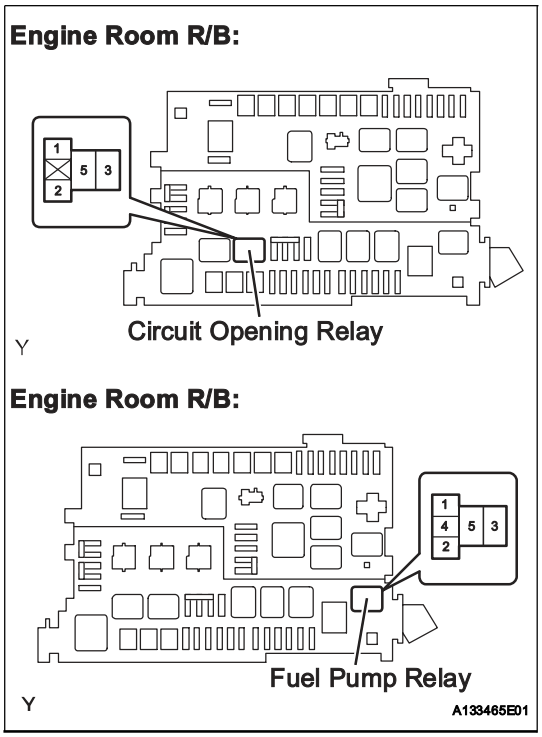

(a) Remove the circuit opening relay from the engine room R/B.
(b) Remove the fuel pump relay from the engine room R/B.
(c) Check the resistance.

Standard Resistance (Check for open)

Tester Connections	Specified Conditions
Circuit opening relay (3) - Fuel pump relay (3)	Below 1 Ω

Standard Resistance (Check for short)

Tester Connections	Specified Conditions
Circuit opening relay (3) or Fuel pump relay (3) - Body ground	10 kΩ or higher

(d) Reinstall the circuit opening relay.
(e) Reinstall the fuel pump relay.

NG → **REPAIR OR REPLACE HARNESS OR CONNECTOR**

OK

CHECK AND REPAIR HARNESS AND CONNECTOR (EFI RELAY - CIRCUIT OPENING RELAY)

10 INSPECT FUEL PUMP RELAY ASSEMBLY

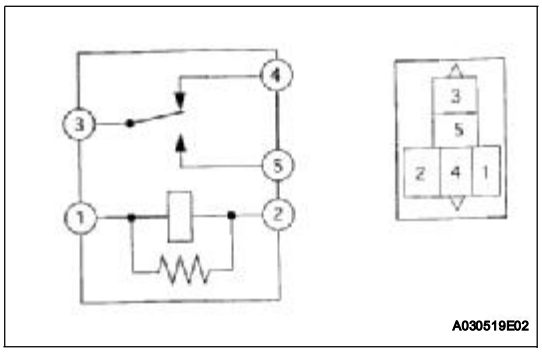

(a) Remove the fuel pump relay from the engine room R/B.
(b) Check the fuel pump relay resistance.

Standard Resistance

Tester Connections	Specified Conditions
3 - 4	Below 1 Ω
3 - 5	10 kΩ or higher
3 - 4	10 kΩ or higher (when battery voltage applied to terminals 1 and 2)
3 - 5	Below 1 Ω (when battery voltage applied to terminals 1 and 2)

(c) Reinstall the fuel pump relay.

NG → **REPLACE FUEL PUMP RELAY ASSEMBLY**

OK

11 INSPECT FUEL PUMP RESISTOR (RESISTANCE)

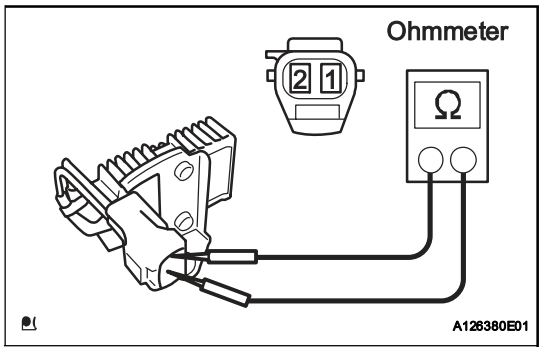

(a) Inspect the fuel pump resistor resistance.
  (1) Measure the resistance.
    Standard Resistance:
    0.941 to 0.999 Ω at 20°C (68°F)

NG → **REPLACE FUEL PUMP RESISTOR (See page FU-36)**

OK

12 CHECK HARNESS AND CONNECTOR (FUEL PUMP RELAY - FUEL PUMP RESISTOR - FUEL PUMP)

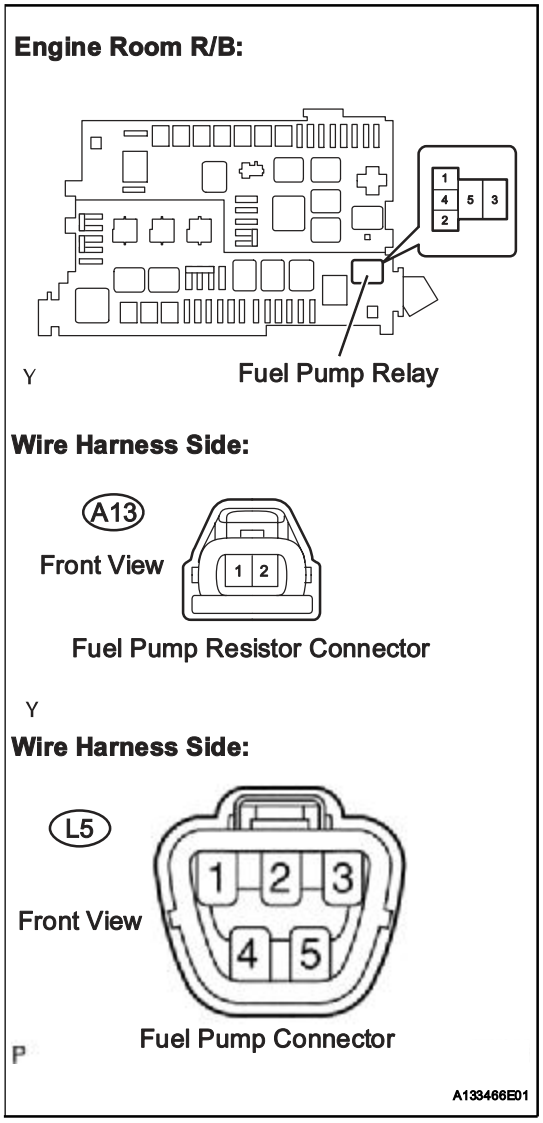

(a) Check the harness and connector between the fuel pump relay and fuel pump resistor.
  (1) Remove the fuel pump relay from the engine room R/B.
  (2) Disconnect the A13 fuel pump resistor connector.
  (3) Check the resistance.
    Standard Resistance (Check for open)

Tester Connections	Specified Conditions
Fuel pump relay (5) - Fuel pump resistor (A13-1)	Below 1 Ω

Standard Resistance (Check for short)

Tester Connections	Specified Conditions
Fuel pump relay (5) or Fuel pump resistor (A13-1) - Body ground	10 kΩ or higher

  (4) Reinstall the fuel pump relay.
  (5) Reconnect the fuel pump resistor connector.

(b) Check the harness and connector between the fuel pump resistor and fuel pump.
  (1) Disconnect the A13 fuel pump resistor connector.
  (2) Disconnect the L5 fuel pump connector.
  (3) Check the resistance.
    Standard Resistance (Check for open)

Tester Connections	Specified Conditions
Fuel pump resistor (A13-2) - Fuel pump (L5-4)	Below 1 Ω

Standard Resistance (Check for short)

Tester Connections	Specified Conditions
Fuel pump resistor (A13-2) or Fuel pump (L5-4) - Body ground	10 kΩ or higher

  (4) Reconnect the fuel pump resistor connector.
  (5) Reconnect the fuel pump connector.

NG → **PROCEED TO NEXT CIRCUIT INSPECTION SHOWN IN PROBLEM SYMPTOMS TABLE**

NG

REPAIR OR REPLACE HARNESS OR CONNECTOR

ACIS Control Circuit

DESCRIPTION

This circuit opens and closes the Intake Air Control Valve (IACV) in response to changes in the engine load in order to increase the intake efficiency (ACIS: Acoustic Control Induction System).
When the engine speed is between 2,200 rpm and 4,100 rpm and the throttle valve opening angle is 60° or more, the ECM supplies current to the VSV (ON status), to close the IACV. Under other conditions, the VSV is usually OFF and the IACV is open.

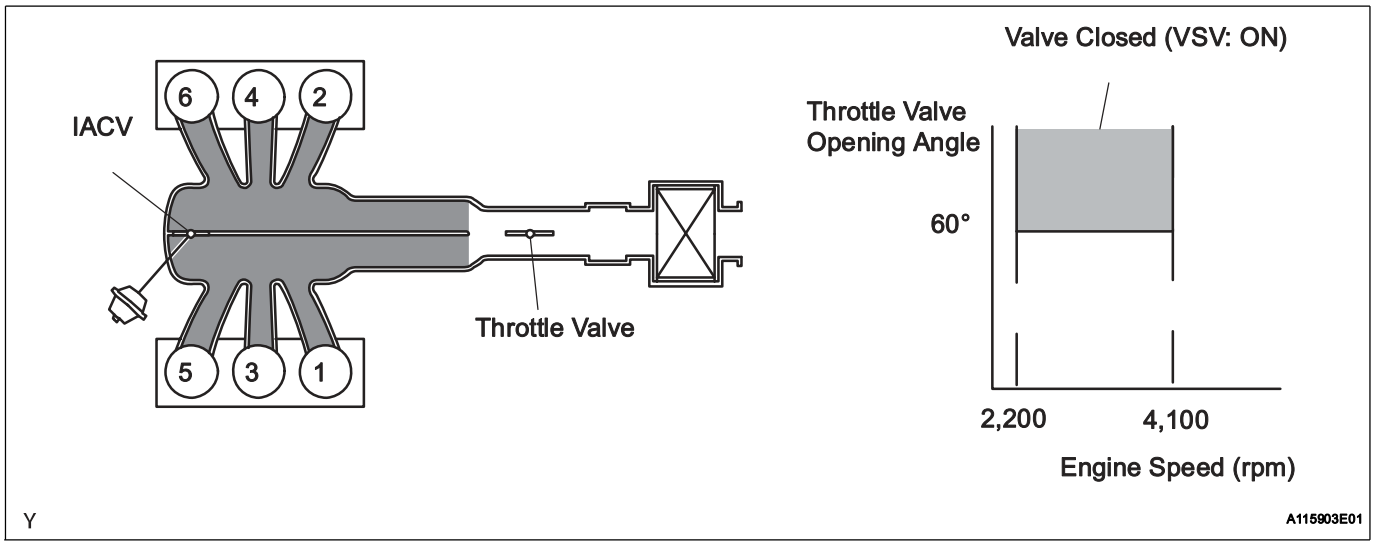

WIRING DIAGRAM

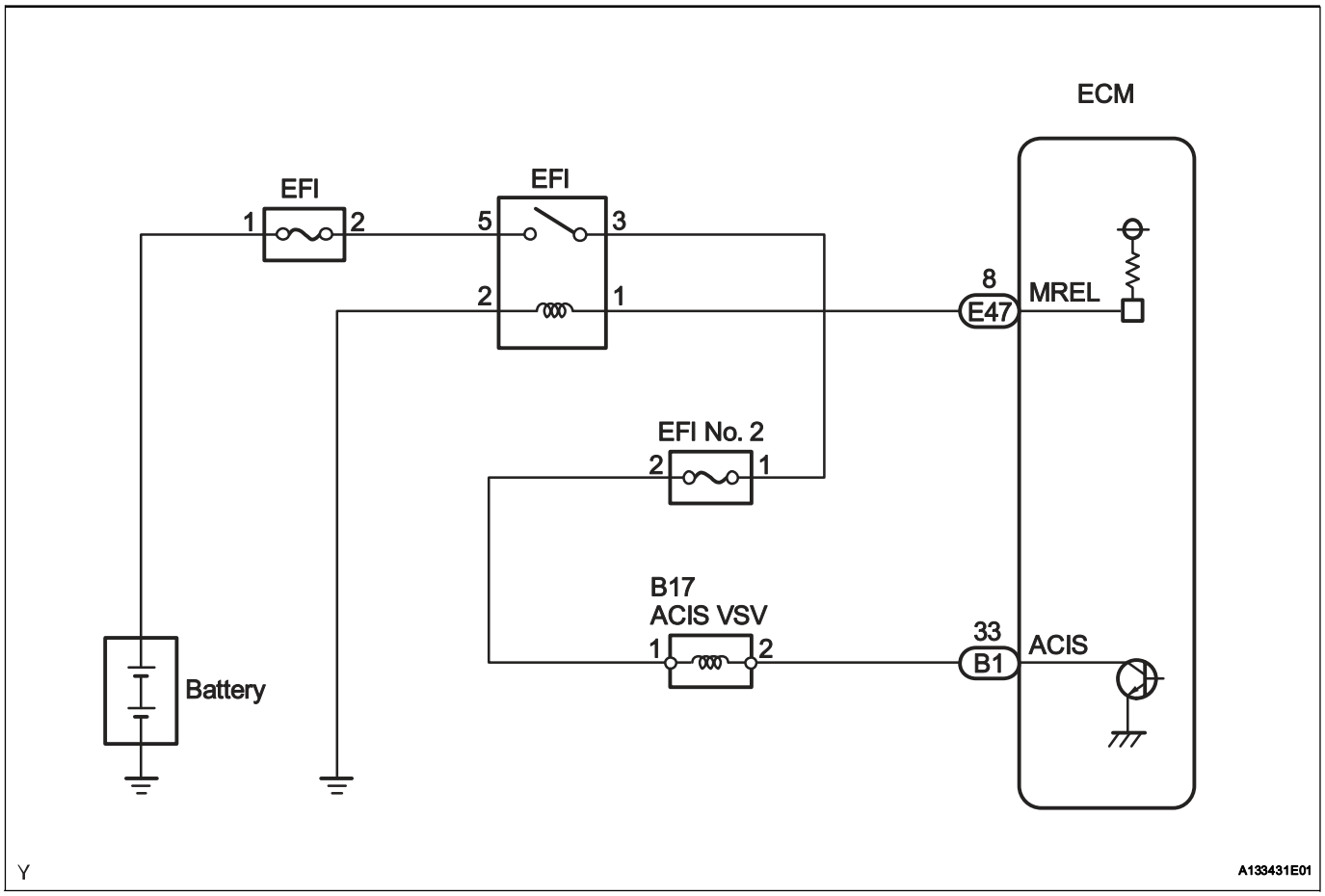

INSPECTION PROCEDURE

1	PERFORM ACTIVE TEST USING INTELLIGENT TESTER (OPERATE VSV FOR ACIS)

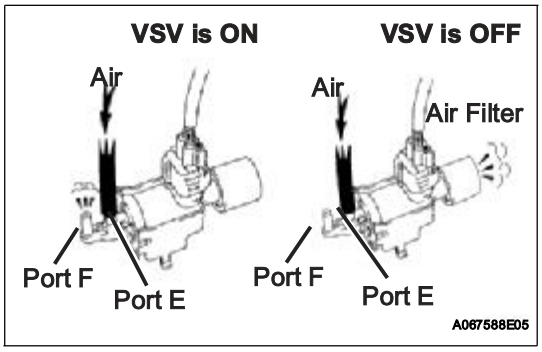

(a) Disconnect the vacuum hose.
(b) Connect an intelligent tester to the DLC3.
(c) Turn the ignition switch ON and turn the tester ON.
(d) Select the following menu items: DIAGNOSIS / ENHANCED OBD II / ACTIVE TEST / INTAKE CTL VSV1. Operate the VSV for ACIS.
(e) Check the VSV operation when it is operated using an intelligent tester.
OK

Tester Operations	Specified Conditions
VSV ON	Air from port E flows out through port F
VSV OFF	Air from port E flows out through air filter

(f) Reconnect the vacuum hose.

OK → **Go to step 4**

NG

2	CHECK VSV FOR ACIS (OPERATION)

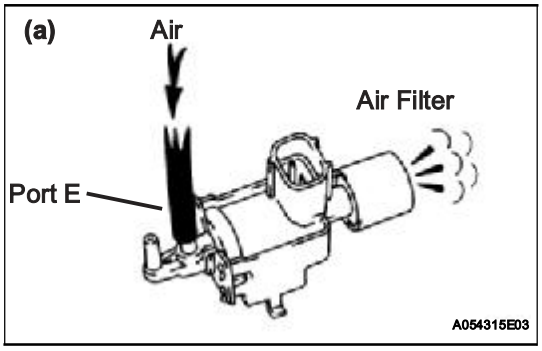

(a) Check that air flows from port E to the air filter.
OK:
Air from port E flows out through the air filter.

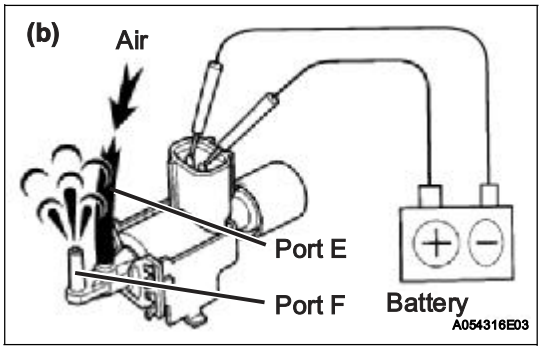

(b) Apply the battery positive voltage across the terminals.
(c) Check that air flows from port E to port F.
OK:
Air from port E flows out through port F.

NG → **REPLACE VSV FOR ACIS (See page IT-6)**

OK

3	CHECK HARNESS AND CONNECTOR (VSV FOR ACIS - ECM, VSV FOR ACIS - EFI RELAY)

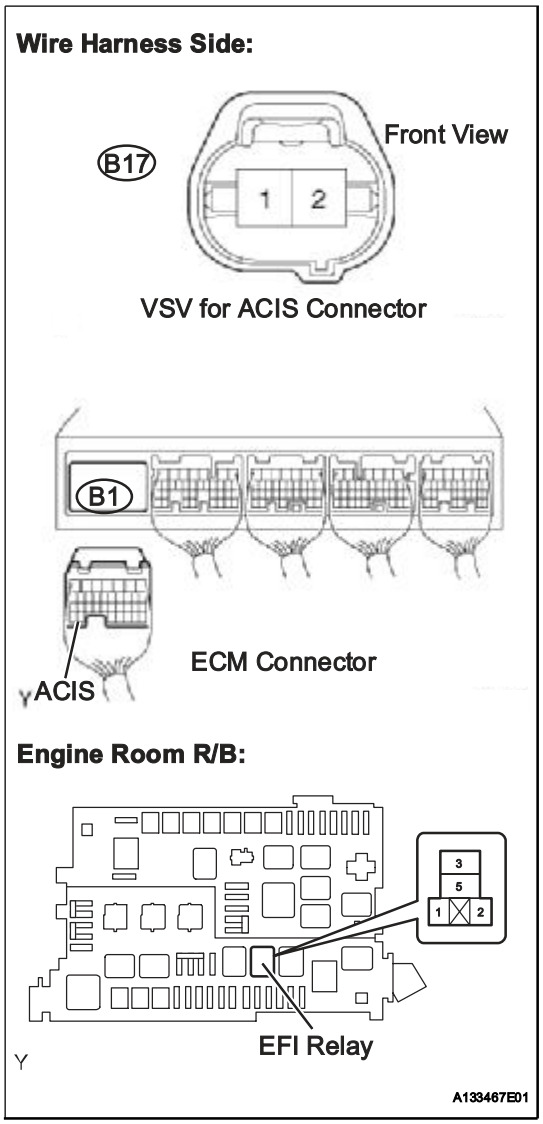

(a) Check the wire harness and connectors between the VSV for ACIS and ECM.
  (1) Disconnect the B17 VSV for ACIS connector.
  (2) Disconnect the B1 ECM connector.
  (3) Check the resistance.
  Standard Resistance (Check for open)

Tester Connections	Specified Conditions
VSV for ACIS (B17-2) - ACIS (B1-33)	Below 1 Ω

Standard Resistance (Check for short)

Tester Connections	Specified Conditions
VSV for ACIS (B17-2) or ACIS (B1-33) - Body ground	10 kΩ or higher

  (4) Reconnect the VSV for ACIS connector.
  (5) Reconnect the ECM connector.

(b) Check the wire harness between the VSV for ACIS and EFI relay.
  (1) Disconnect the B17 VSV for ACIS connector.
  (2) Remove the EFI relay from the engine room R/B.
  (3) Check the resistance.
  Standard Resistance (Check for open)

Tester Connections	Specified Conditions
VSV for ACIS (B17-1) - EFI relay terminal 3 of R/B	Below 1 Ω

  (4) Reconnect the VSV for ACIS connector.
  (5) Reinstall the EFI relay.

NG → **REPAIR OR REPLACE HARNESS OR CONNECTOR**

OK

4	CHECK VACUUM HOSES (INTAKE MANIFOLD - IACV, IACV - VSV FOR ACIS)

(a) Check that the vacuum hose is connected correctly.
(b) Check the vacuum hose for looseness and disconnection.
(c) Check the vacuum hose for cracks, holes and damage.

NG → **REPAIR OR REPLACE VACUUM HOSES**

OK

5	INSPECT INTAKE AIR CONTROL VALVE (INTAKE AIR SURGE TANK)

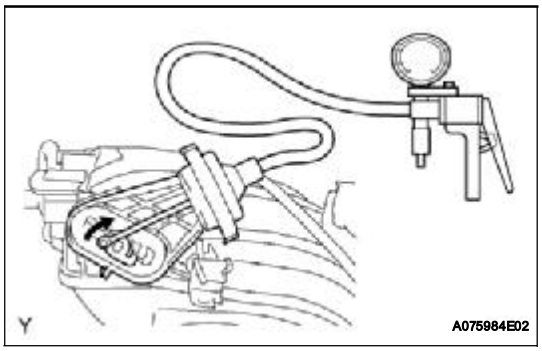

(a) Check that the lever moves when a vacuum of 26.6 kPa (200 mmHg) is applied with the vacuum gauge on.
OK:
Lever moves

(b) Check that the vacuum of 26.6 kPa (200 mmHg) is sustained for 1 minute in the above state.
OK:
Vacuum is sustained

NG → **REPLACE INTAKE AIR CONTROL VALVE (INTAKE AIR SURGE TANK)**

OK

REPLACE ECM (See page ES-446)

MIL Circuit

DESCRIPTION

The MIL (Malfunction Indicator Lamp) is used to indicate vehicle malfunction detections by the ECM.
By turning the ignition switch ON, power is supplied to the MIL circuit, and the ECM provides the circuit ground which illuminates the MIL.
The MIL operation can be checked visually: When the ignition switch is first turned ON, the MIL should be illuminated and should then turn OFF. If the MIL remains illuminated or is not illuminated, conduct the following troubleshooting procedure using an intelligent tester.

WIRING DIAGRAM

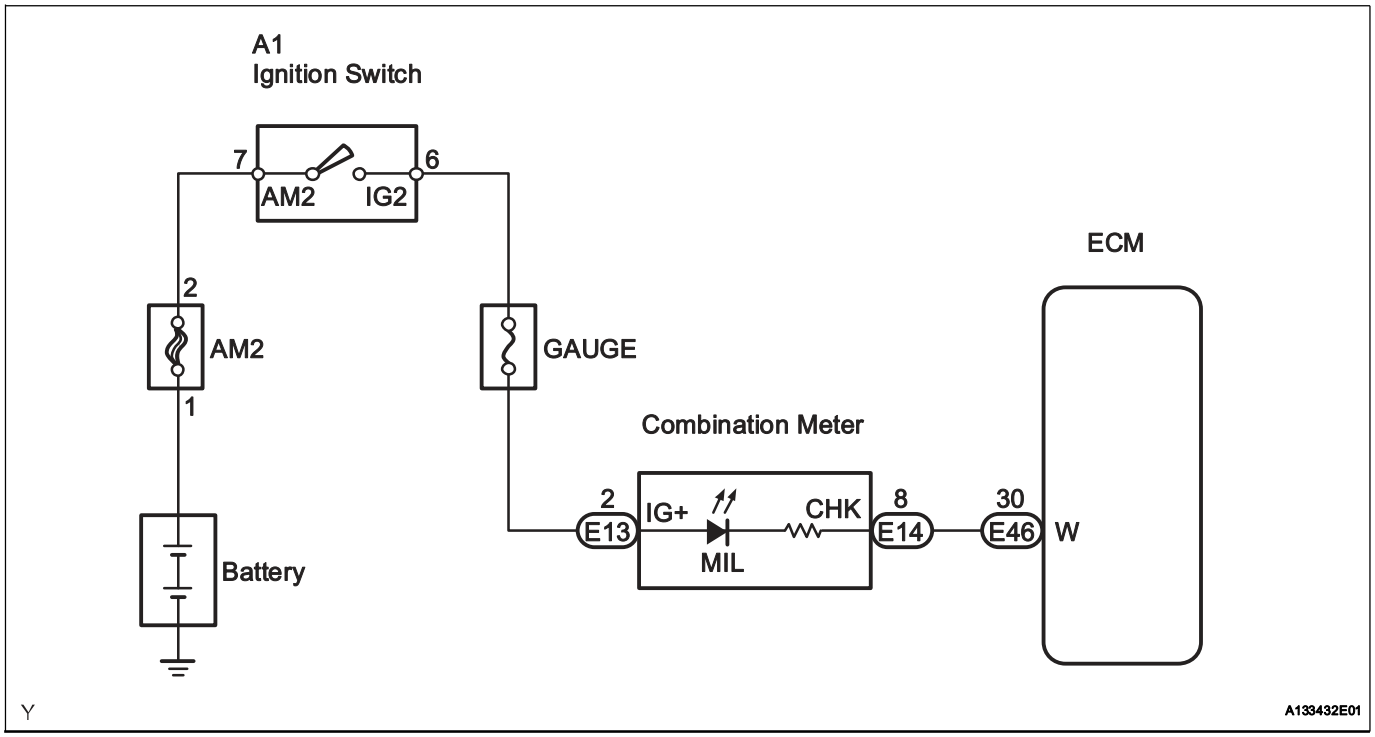

INSPECTION PROCEDURE

1	CHECK THAT MIL IS ILLUMINATED

(a) Perform troubleshooting in accordance with the chart below.

Result

MIL Condition	Proceed To
MIL remains ON	A
MIL does not illuminate	B

B → Go to step 4

A

ES

2	CHECK WHETHER MIL TURNS OFF

(a) Connect an intelligent tester to the DLC3.
(b) Turn the ignition switch ON.
(c) Turn the tester ON.
(d) Check whether any DTCs have been stored (See page ES-38). Note them down if necessary.
(e) Clear DTCs (See page ES-38).
(f) Check if the MIL turns off.
OK:
MIL should turn off.

OK → **REPAIR CIRCUITS INDICATED BY OUTPUT DTCS (See page ES-57)**

NG

3	CHECK HARNESS AND CONNECTOR (CHECK FOR SHORT IN WIRE HARNESS)

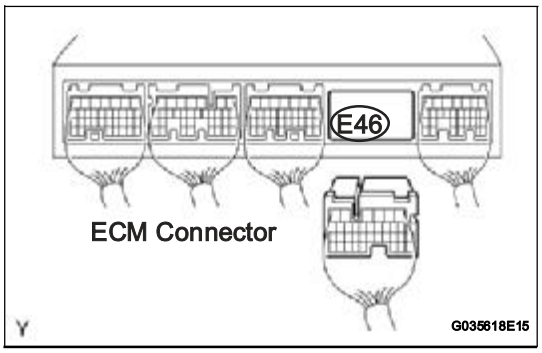

(a) Disconnect the E46 ECM connector.
(b) Turn the ignition switch ON.
(c) Check that MIL is not illuminated.
OK:
MIL is not illuminated.
(d) Reconnect the ECM connector.

OK → **REPLACE ECM (See page ES-446)**

NG

CHECK AND REPAIR HARNESS AND CONNECTOR (COMBINATION METER - ECM)

4	CHECK THAT MIL IS ILLUMINATED

(a) Check if the MIL is illuminated when the ignition switch is turns ON.
OK:
MIL should be illuminated.

OK → **SYSTEM OK**

NG

5	CHECK THAT ENGINE STARTS

(a) Turn the ignition switch ON.
(b) Start the engine.

Result

Result	Proceed To
Engine starts	A
Engine does not start*	B

HINT:
*: An intelligent tester cannot communicate with the ECM.

B → **GO TO VC OUTPUT CIRCUIT (See page ES-389)**

A

ES

6	INSPECT COMBINATION METER ASSEMBLY (MIL CIRCUIT)

(a) See the combination meter troubleshooting procedure (See page ME-9).

NG → **REPAIR OR REPLACE BULB OR COMBINATION METER ASSEMBLY**

OK

CHECK AND REPAIR HARNESS AND CONNECTOR (COMBINATION METER - ECM)

MASS AIR FLOW METER

COMPONENTS

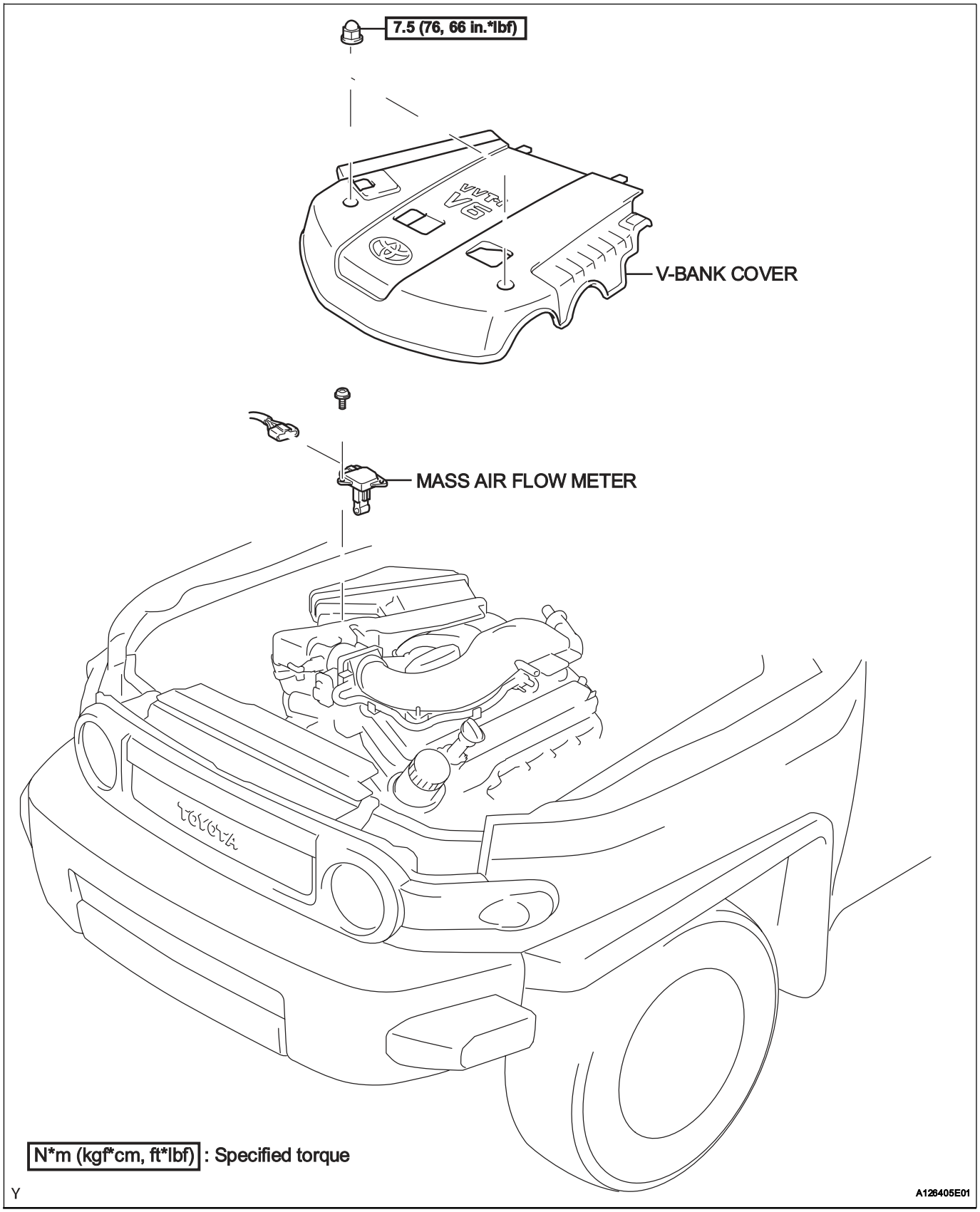

ON-VEHICLE INSPECTION

NOTICE:

- **Perform the MAF meter inspection according to the procedures below.**
- **Only replace the MAF meter when both the LONG FT#1 value and MAF value in the DATA LIST (with the engine stopped) are not within the normal operating range.**

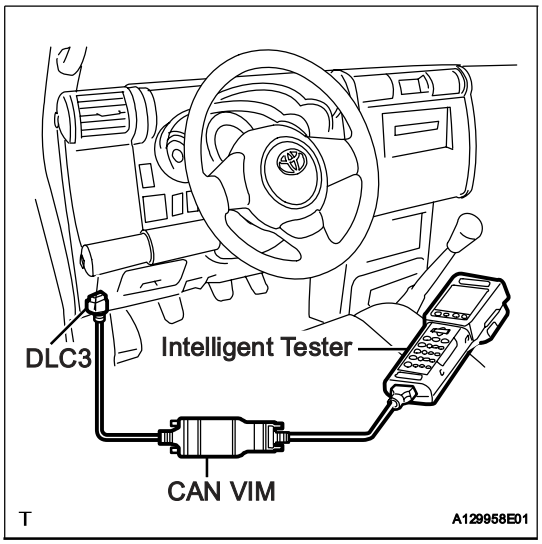

1. INSPECT MASS AIR FLOW METER

(a) Perform the confirmation driving pattern.
  (1) Connect the intelligent tester to the DLC3.
  (2) Turn the ignition switch ON.
  (3) Turn the intelligent tester ON.
  (4) Clear the DTCs (see page ES-38).
  (5) Start the engine and warm it up with all accessory switches OFF (until the engine coolant temperature is 75°C (167°F) or more).
  (6) Drive the vehicle at 31 mph (50 km/h) or more for 3 or more *1.
  (7) Let the engine idle (accelerator pedal fully released) for 2 minutes or more *2.
  (8) Perform steps *1 and *2 at least 3 times.

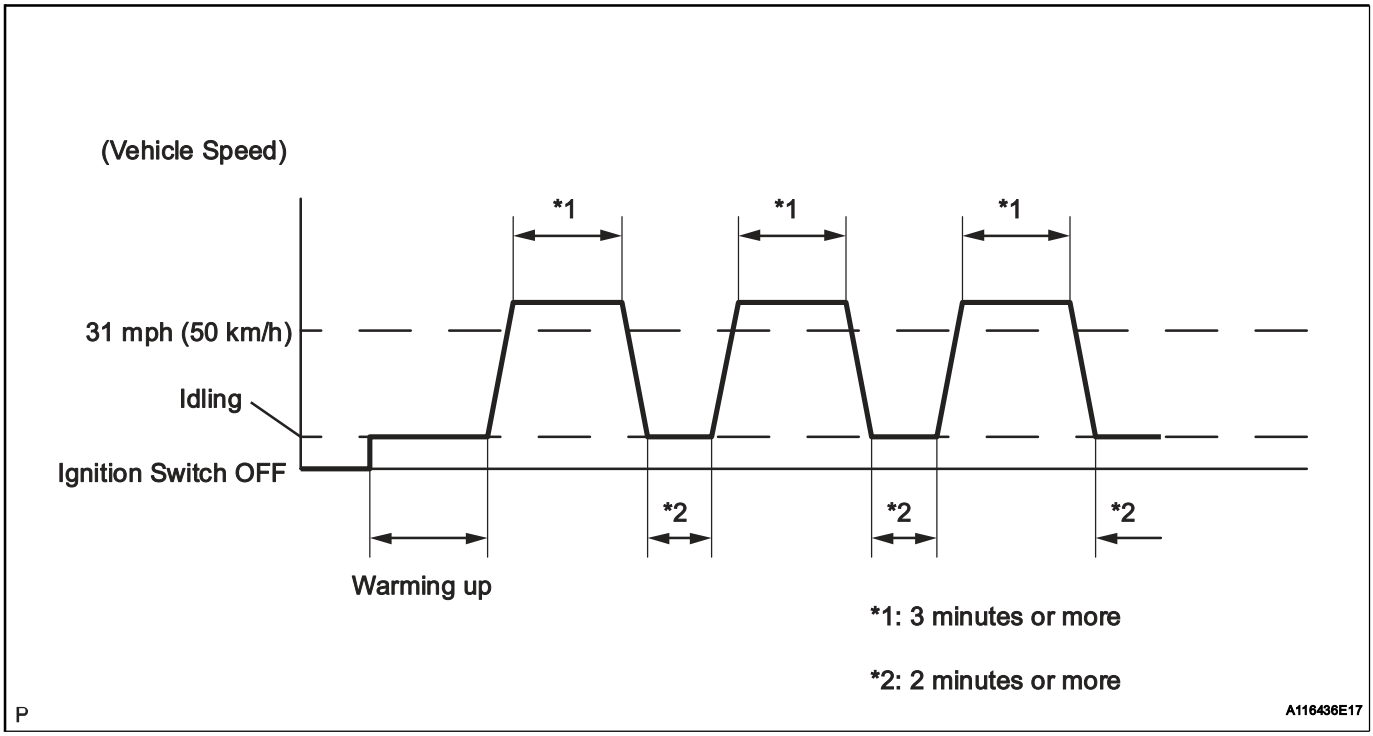

(b) Read the value using intelligent tester (LONG FT#1).
  (1) Select the following menu items: DIAGNOSIS / ENHANCED OBD II / DATA LIST / PRIMARY / LONG FT#1.
  (2) Read the values displayed on the tester.
  Standard value:
  Within -15 to +15 %

If the result is not within the specified range, perform the inspection below.

(c) Read the value using intelligent tester (MAF).

NOTICE:

- **Turn off the engine.**
- **Perform the inspection with the vehicle indoors and on a level surface.**
- **Perform the inspection of the MAF meter while it is installed in the air cleaner case (installed on the vehicle).**
- **During the test, do not use the exhaust air duct to perform suction on the exhaust pipe.**

(1) Turn the ignition switch to ACC.

(2) Turn the ignition switch ON (do not run the engine).

(3) Turn the tester ON.

(4) Select the following menu items: DIAGNOSIS / ENHANCED OBD II / DATA LIST / PRIMARY / MAF.

(5) Wait 30 seconds, and read the values on the intelligent tester.

Standard condition:

Less than 0.72 g/sec

- If the result is not as specified, replace the MAF meter.
- If the result is within the specified range, inspect the cause of the extremely rich or lean air fuel ratio.

ES

REMOVAL

1. **DISCONNECT CABLE FROM NEGATIVE BATTERY TERMINAL**
2. **REMOVE V-BANK COVER (See page ES-428)**
3. **REMOVE MASS AIR FLOW METER**
   (a) Disconnect the connector.
   (b) Remove the 2 screws, then remove the mass air flow meter.

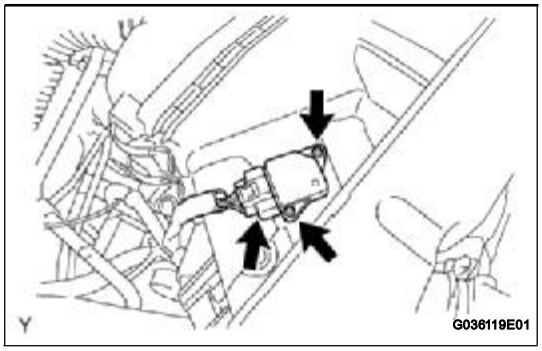

INSTALLATION

1. **INSTALL MASS AIR FLOW METER**
   (a) Install the mass air flow meter with 2 screws.
   (b) Connect the connector.
2. **CONNECT CABLE TO NEGATIVE BATTERY TERMINAL**
   Torque: 3.9 N*m (40 kgf*cm, 35 in.*lbf)
3. **INSTALL V-BANK COVER (See page ES-431)**

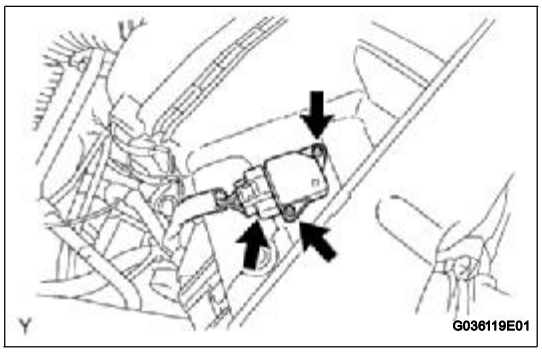

CAMSHAFT TIMING OIL CONTROL VALVE ASSEMBLY

COMPONENTS

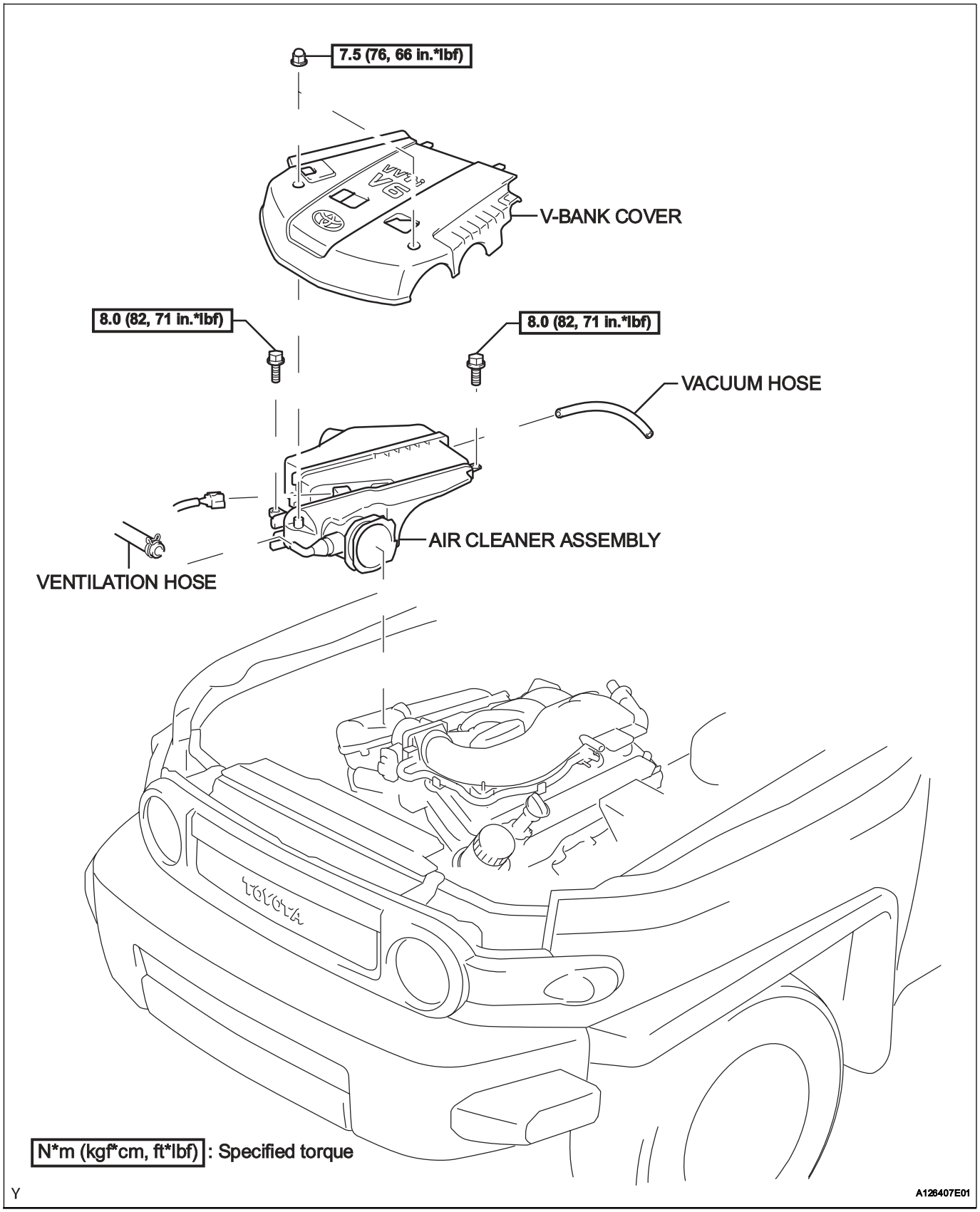

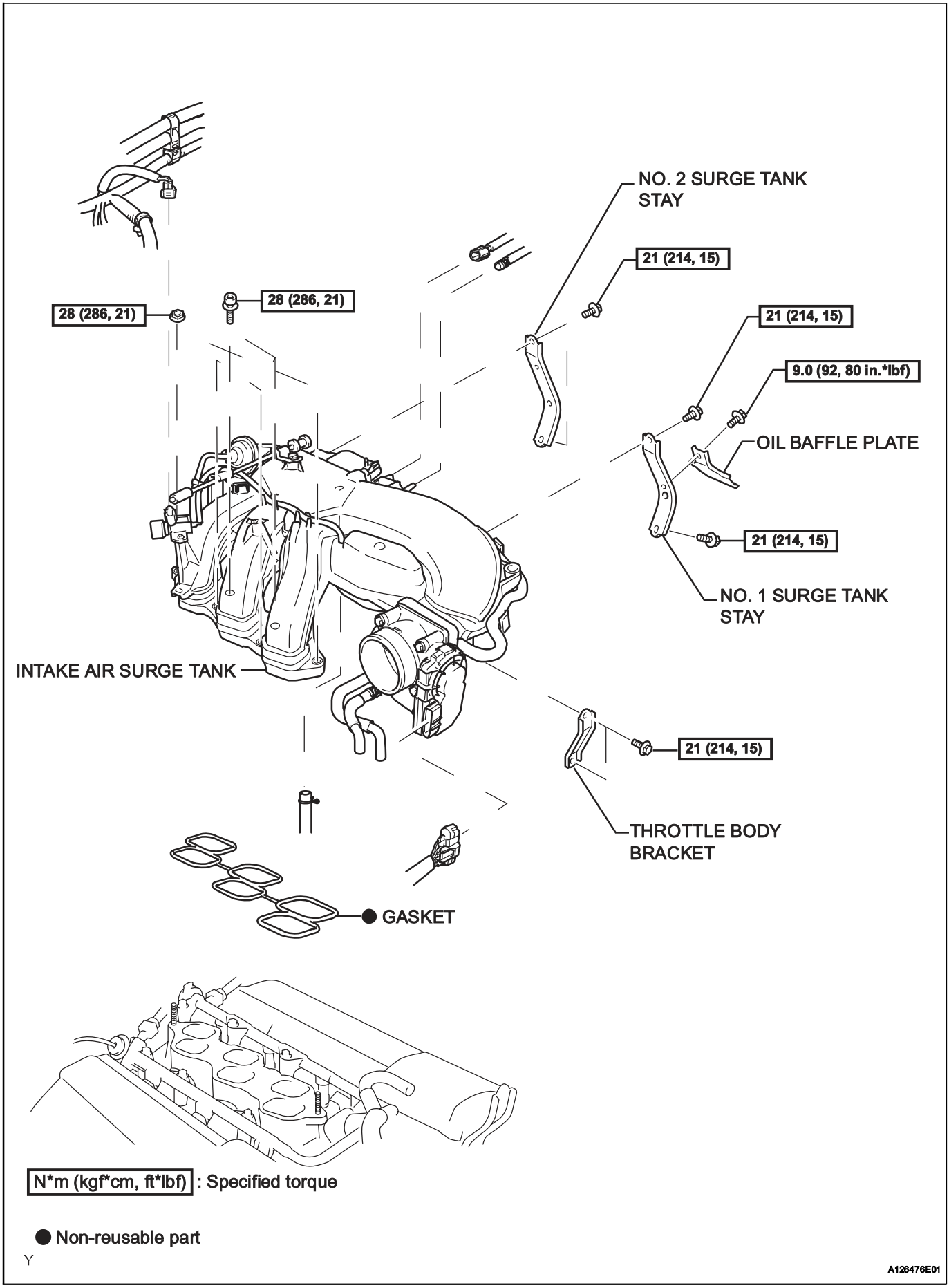
NO. 2 SURGE TANK STAY
21 (214, 15)
28 (286, 21)
28 (286, 21)
21 (214, 15)
9.0 (92, 80 in.*lbf)
OIL BAFFLE PLATE
21 (214, 15)
NO. 1 SURGE TANK STAY
INTAKE AIR SURGE TANK
21 (214, 15)
THROTTLE BODY BRACKET
GASKET
N*m (kgf*cm, ft*lbf) : Specified torque
Non-reusable part
Y
A126476E01

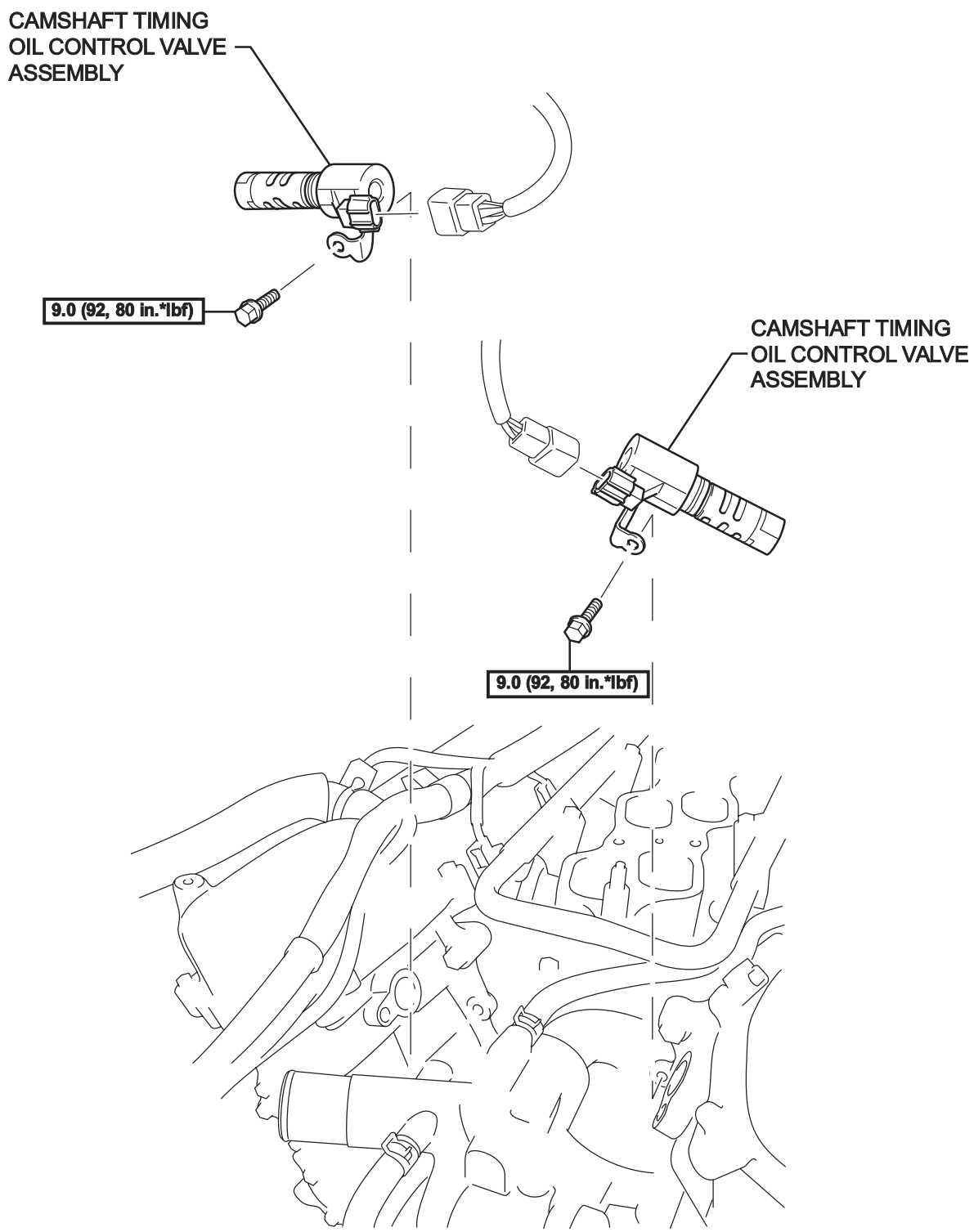

N*m (kgf*cm, ft*lbf) : Specified torque

Y

A126418E01

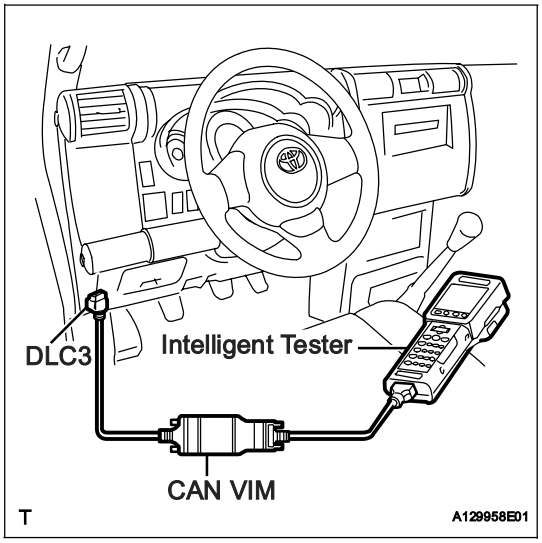

ON-VEHICLE INSPECTION

1. INSPECT CAMSHAFT TIMING OIL CONTROL VALVE ASSEMBLY

(a) Check the operation.

(1) Turn the ignition switch to ON.

(2) Turn the intelligent tester ON.

(3) Start the engine and warm it up.

(4) Select the following menu items: DIAGNOSIS / ENHANCED OBD II / ACTIVE TEST / PRIMARY / VVT CTRL B1.

(5) Operate the OCV using the intelligent tester, then check the engine speed.

Standard

Tester Operation	Specified Condition
OCV OFF	Normal engine speed
OCV ON	Rough idling or engine stalls

If the operation is not as specified, check the camshaft timing oil control valve, wire harness and ECM.

REMOVAL

1. **DISCONNECT CABLE FROM NEGATIVE BATTERY TERMINAL**
2. **DRAIN ENGINE COOLANT (See page CO-3)**
3. **REMOVE V-BANK COVER (See page ES-428)**
4. **REMOVE AIR CLEANER ASSEMBLY (See page ES-429)**
5. **REMOVE THROTTLE BODY BRACKET (See page FU-11)**
6. **REMOVE OIL BAFFLE PLATE (See page FU-11)**
7. **REMOVE NO. 1 SURGE TANK STAY (See page FU-11)**
8. **REMOVE NO. 2 SURGE TANK STAY (See page FU-12)**
9. **REMOVE INTAKE AIR SURGE TANK (See page FU-12)**
10. **REMOVE CAMSHAFT TIMING OIL CONTROL VALVE ASSEMBLY**
    (a) Disconnect the 2 connectors.
    (b) Remove the 2 bolts, then remove the 2 camshaft timing oil control valves.

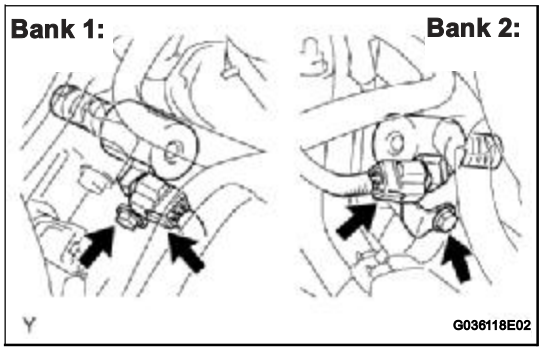

INSPECTION

1. **INSPECT CAMSHAFT TIMING OIL CONTROL VALVE ASSEMBLY**
    (a) Check the resistance.
        (1) Using an ohmmeter, measure the resistance between the terminals.
        Standard resistance

Tester Connection	Specified Condition
1 (+B) - 2 (GND)	6.9 to 7.9 Ω at 20°C (68°F)

If the result is not as specified, replace the camshaft timing oil control valve.

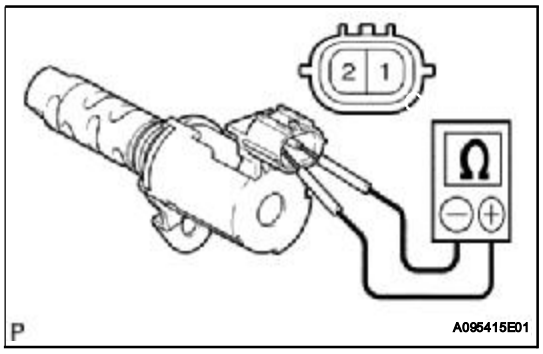

    (b) Check the operation.
        (1) Connect the positive (+) lead from the battery to terminal 1 and the negative (-) lead to terminal 2, and check that the valve operates.
        NOTICE:
        Check that the spool valve is not stuck.
        HINT:
        The spool valve may not return if foreign matter is caught in it. This may cause subtle pressure leakage to the advance side, and a DTC may be set.

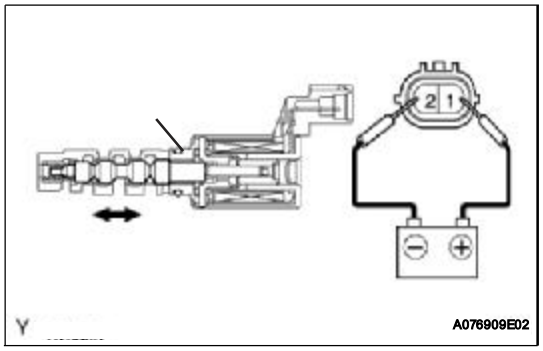

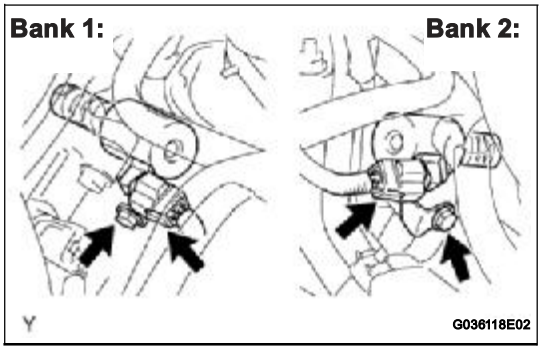

INSTALLATION

1. **INSTALL CAMSHAFT TIMING OIL CONTROL VALVE ASSEMBLY**
   (a) Install the 2 camshaft timing oil control valves with the 2 bolts.
   Torque: 9.0 N*m (92 kgf*cm, 80 in.*lbf)
   (b) Connect the 2 connectors.
2. **INSTALL INTAKE AIR SURGE TANK (See page FU-17)**
3. **INSTALL NO. 2 SURGE TANK STAY (See page FU-19)**
4. **INSTALL NO. 1 SURGE TANK STAY (See page FU-19)**
5. **INSTALL OIL BAFFLE PLATE (See page FU-19)**
6. **INSTALL THROTTLE BODY BRACKET (See page FU-19)**
7. **INSTALL AIR CLEANER ASSEMBLY (See page ES-431)**
8. **CONNECT CABLE TO NEGATIVE BATTERY TERMINAL**
   Torque: 3.9 N*m (40 kgf*cm, 35 in.*lbf)
9. **ADD ENGINE COOLANT (See page CO-3)**
10. **CHECK FOR ENGINE COOLANT LEAKAGE (See page CO-4)**
11. **INSTALL V-BANK COVER (See page ES-431)**

ES

VVT SENSOR

COMPONENTS

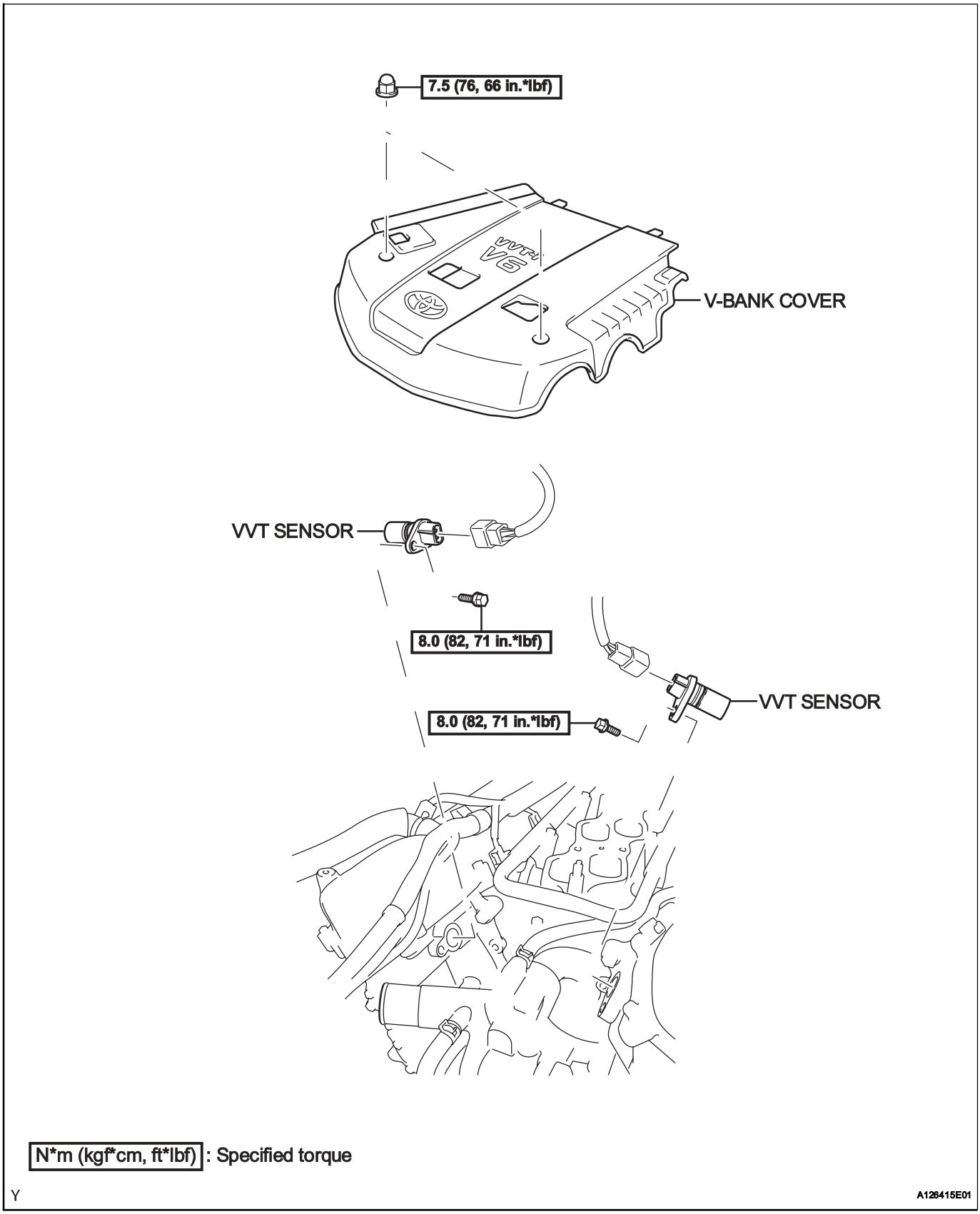

REMOVAL

1. **DISCONNECT CABLE FROM NEGATIVE BATTERY TERMINAL**
2. **DRAIN ENGINE COOLANT (See page CO-3)**
3. **REMOVE V-BANK COVER (See page ES-428)**
4. **REMOVE AIR CLEANER ASSEMBLY (See page ES-429)**
5. **REMOVE VVT SENSOR**
   (a) Bank 1 side VVT sensor:
   (1) Disconnect the VVT sensor connector.
   (2) Remove the bolt and VVT sensor.

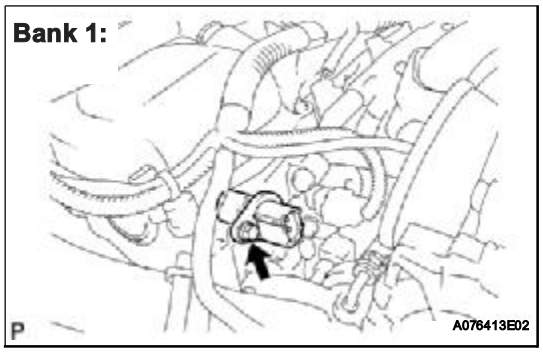

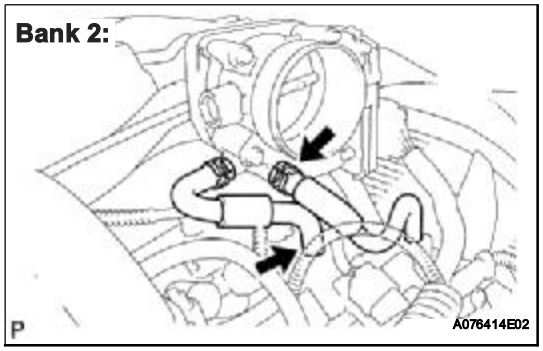

   (b) Bank 2 side VVT sensor:
   (1) Disconnect the No. 4 water by-pass hose and No. 5 water by-pass hose.
   (2) Disconnect the VVT sensor connector.
   (3) Remove the bolt and VVT sensor.

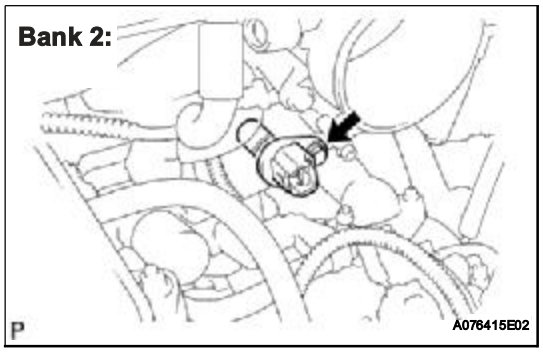

INSTALLATION

1. **INSTALL VVT SENSOR**
   (a) Bank 2 side VVT sensor:
   (1) Apply a light coat of engine oil to the O-ring of the VVT sensor.
   (2) Install the VVT sensor with the bolt.
   Torque: 8.0 N*m (82 kgf*cm, 71 in.*lbf)

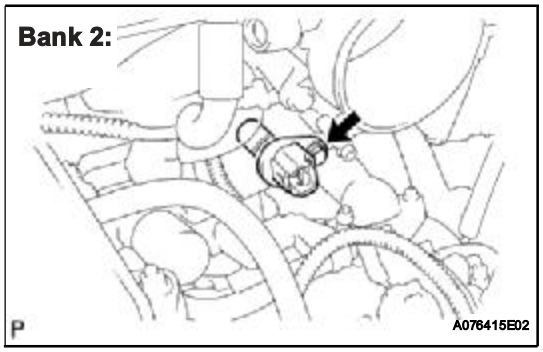

ES

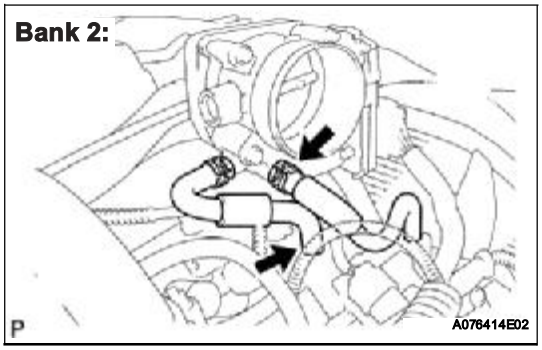

(3) Connect the VVT sensor connector.
(4) Connect the No. 4 water by-pass hose and No. 5 water by-pass hose.

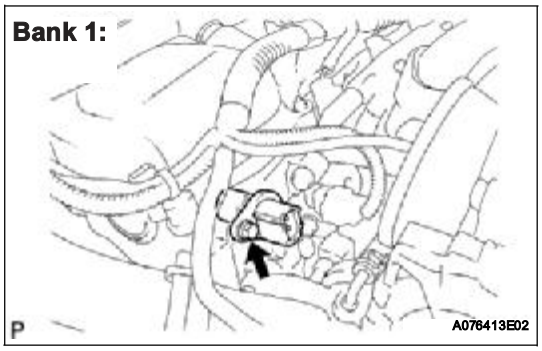

(b) Bank 1 side VVT sensor:
(1) Apply a light coat of engine oil to the O-ring of the VVT sensor.
(2) Install the VVT sensor with the bolt.
Torque: 8.0 N*m (82 kgf*cm, 71 in.*lbf)
(3) Connect the VVT sensor connector.

2. INSTALL AIR CLEANER ASSEMBLY (See page ES-431)

3. CONNECT CABLE TO NEGATIVE BATTERY TERMINAL
Torque: 3.9 N*m (40 kgf*cm, 35 in.*lbf)

4. ADD ENGINE COOLANT (See page CO-3)

5. CHECK FOR ENGINE COOLANT LEAKAGE (See page CO-4)

6. INSTALL V-BANK COVER (See page ES-431)

CRANKSHAFT POSITION SENSOR

COMPONENTS

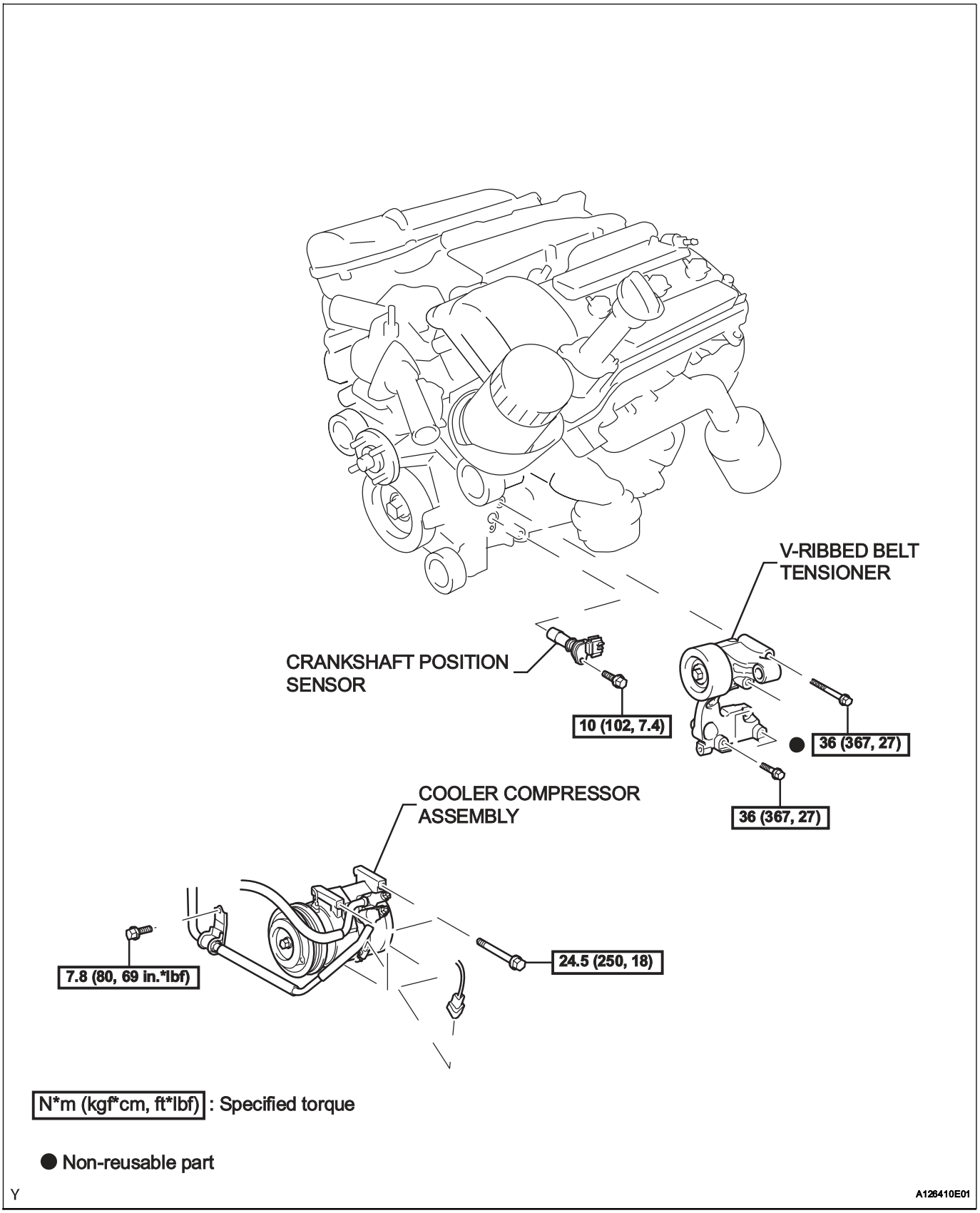

ES

REMOVAL

1. **DISCONNECT CABLE FROM NEGATIVE BATTERY TERMINAL**
2. **REMOVE V-BANK COVER (See page ES-428)**
3. **REMOVE FAN**
   Refer to the procedures up to "REMOVE FAN "(See page CO-17).
4. **REMOVE GENERATOR ASSEMBLY**
   Refer to the procedures up to "REMOVE GENERATOR ASSEMBLY" (See page CH-9)

ES

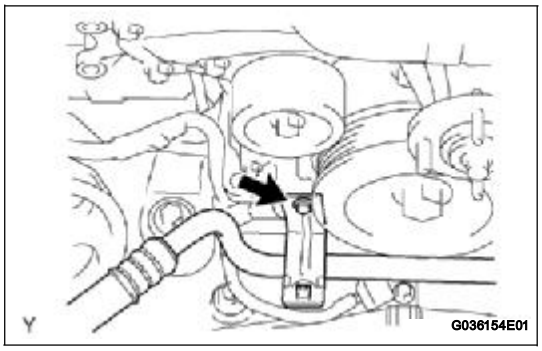

5. **SEPARATE COOLER COMPRESSOR ASSEMBLY**
   (a) Remove the bolt, then separate the suction hose sub-assembly.

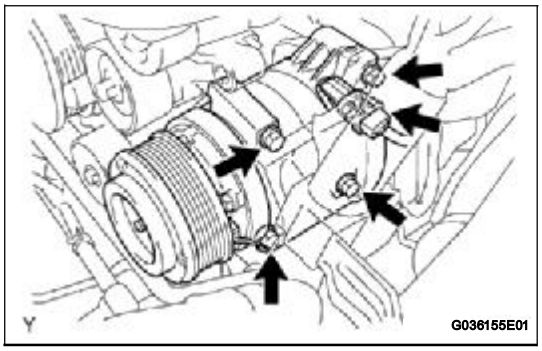

   (b) Disconnect the cooler compressor assembly connector.
   (c) Remove the 4 bolts, then separate the cooler compressor assembly from the V-ribbed belt tensioner assembly.

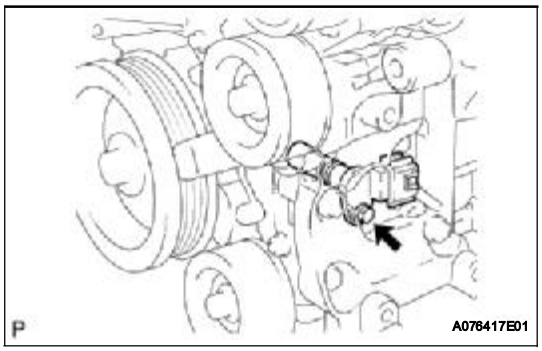

6. **REMOVE CRANKSHAFT POSITION SENSOR**
   (a) Disconnect the crankshaft position sensor connector.
   (b) Remove the bolt, then remove the crankshaft position sensor.

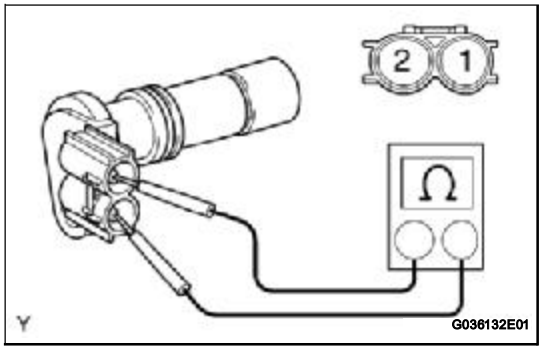

INSPECTION

1. **INSPECT CRANKSHAFT POSITION SENSOR**
   (a) Check the resistance.
   (1) Using an ohmmeter, measure the resistance between the terminals.
   Standard resistance:
   1,850 to 2,450 Ω at 20°C (68°F)
   If the result is not as specified, replace the crankshaft position sensor.

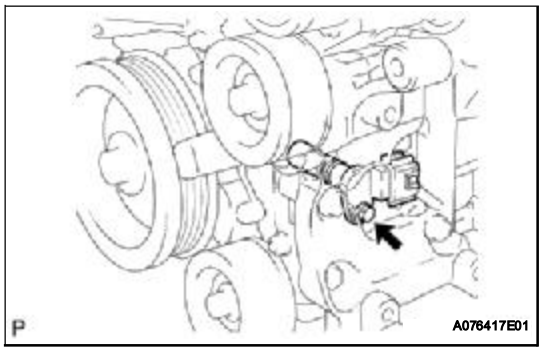

INSTALLATION

1. **INSTALL CRANKSHAFT POSITION SENSOR**
   (a) Apply a light coat of engine oil to the O-ring of the crankshaft position sensor.
   (b) Install the crankshaft position sensor with the bolt.
   Torque: 10 N*m (102 kgf*cm, 7.4 ft.*lbf)
   (c) Connect the crankshaft position sensor connector.

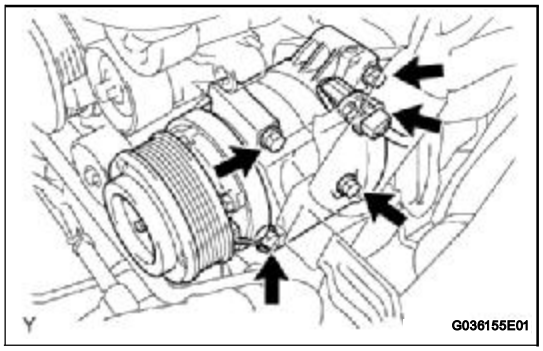

2. **INSTALL COOLER COMPRESSOR ASSEMBLY**
   (a) Install the cooler compressor assembly with the 4 bolts.
   Torque: 24.5 N*m (250 kgf*cm, 18 ft.*lbf)
   (b) Connect the cooler compressor assembly connector.

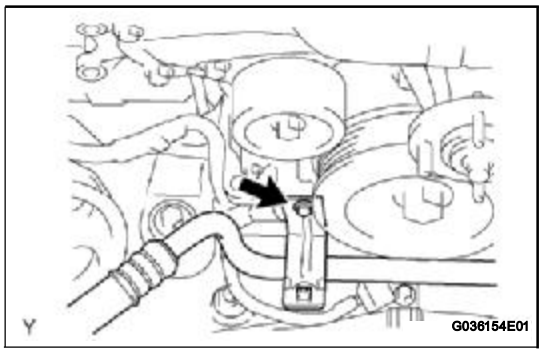

   (c) Install the suction hose sub-assembly with the bolt.
   Torque: 7.8 N*m (80 kgf*cm, 69 in.*lbf)

3. **INSTALL GENERATOR ASSEMBLY**
   Refer to the procedures up to "INSTALL GENERATOR ASSEMBLY" (See page CH-17)

4. **INSTALL FAN**
   Refer to the procedures up to "INSTALL FAN" (See page CO-17).

5. **CONNECT CABLE TO NEGATIVE BATTERY TERMINAL**
   Torque: 3.9 N*m (40 kgf*cm, 35 in.*lbf)

6. **INSTALL V-BANK COVER (See page ES-431)**

ES

ENGINE COOLANT TEMPERATURE SENSOR

COMPONENTS

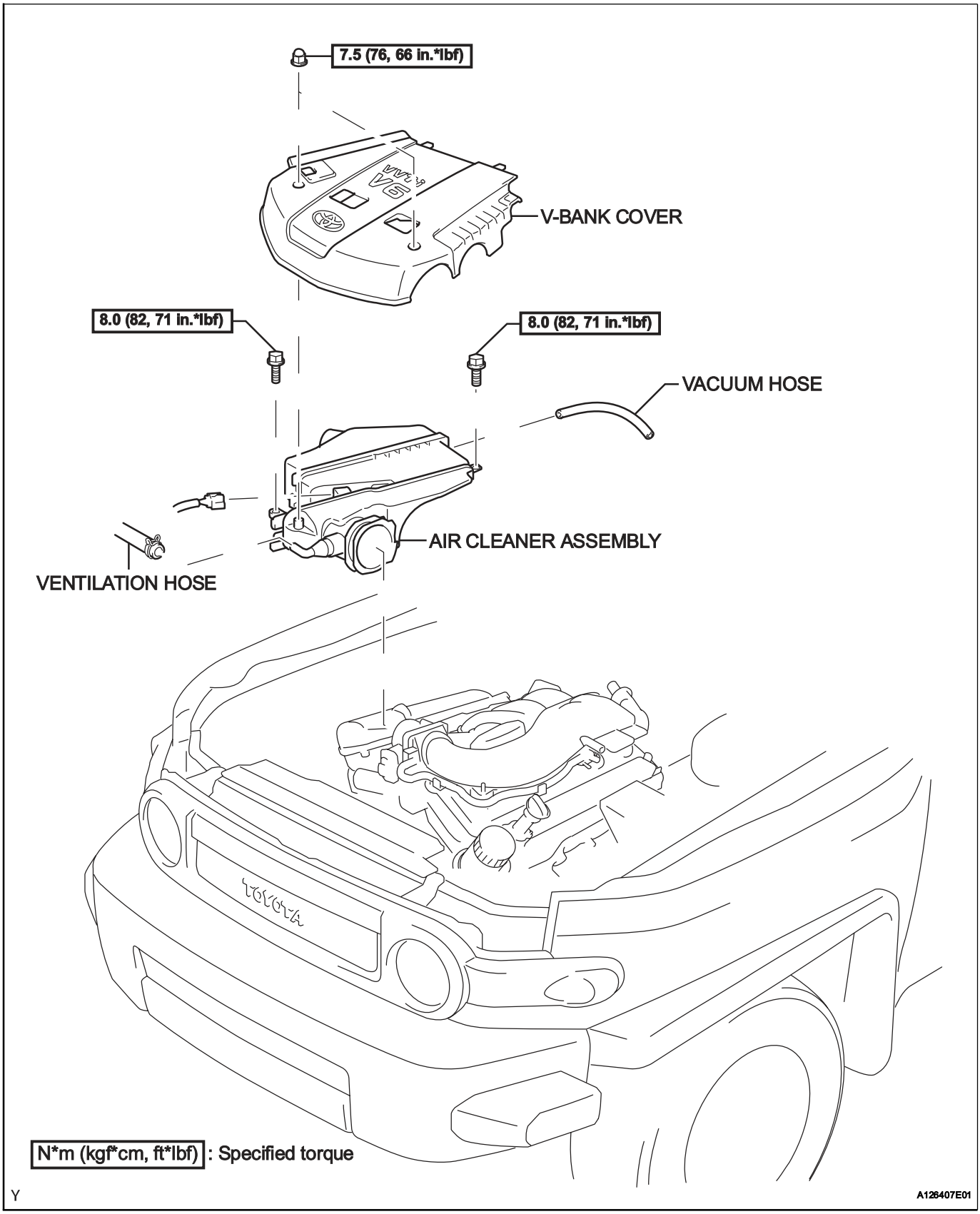

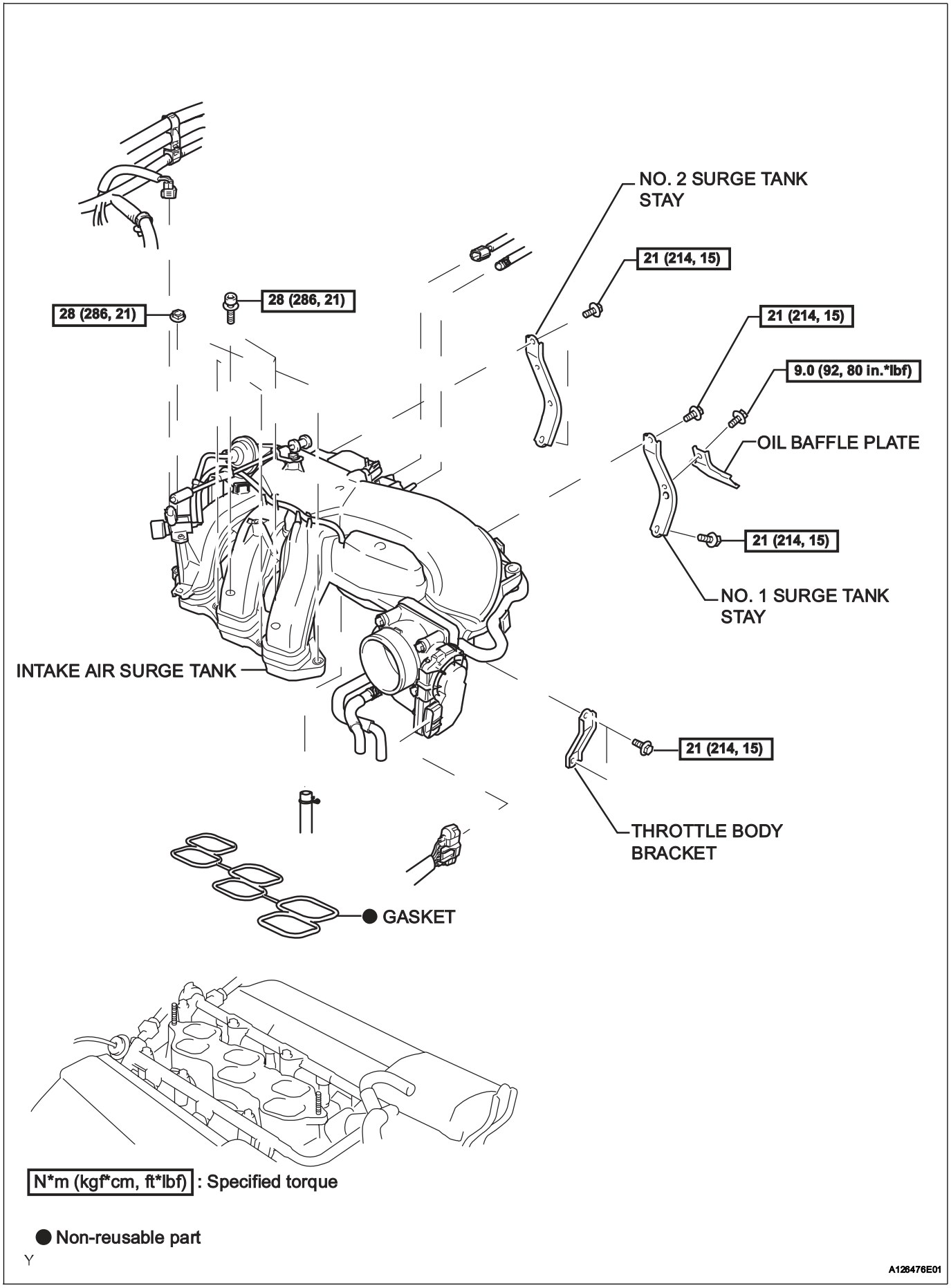
NO. 2 SURGE TANK STAY
21 (214, 15)
28 (286, 21)
28 (286, 21)
21 (214, 15)
9.0 (92, 80 in.*lbf)
OIL BAFFLE PLATE
21 (214, 15)
NO. 1 SURGE TANK STAY
INTAKE AIR SURGE TANK
21 (214, 15)
THROTTLE BODY BRACKET
GASKET
N*m (kgf*cm, ft*lbf) : Specified torque
Non-reusable part
Y
A126476E01

ES

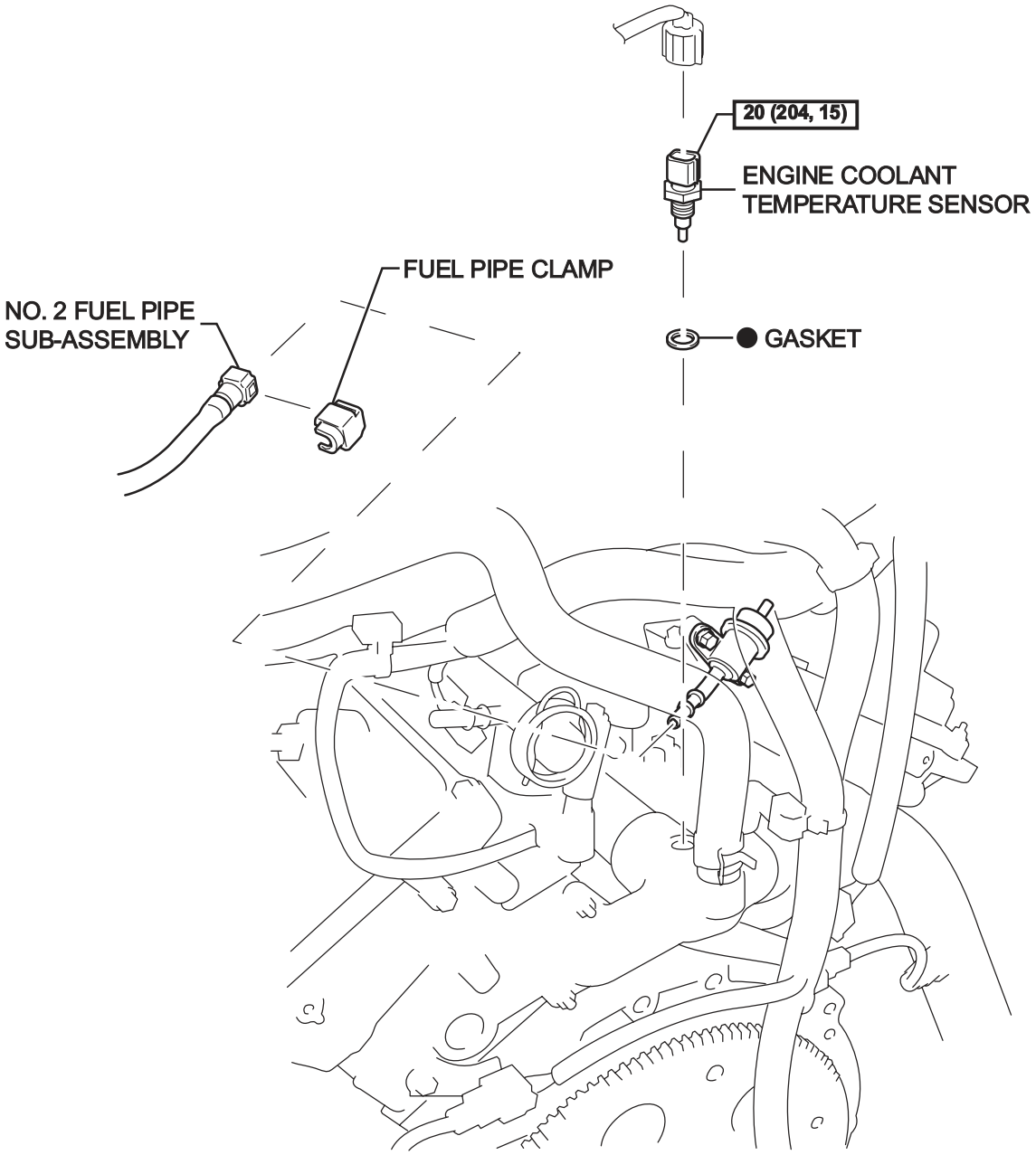

N*m (kgf*cm, ft*lbf) : Specified torque

● Non-reusable part

Y

A126417E01

REMOVAL

1. **DISCHARGE FUEL SYSTEM PRESSURE**
   (See page FU-1)
2. **DRAIN ENGINE COOLANT (See page CO-3)**
3. **DISCONNECT CABLE FROM NEGATIVE BATTERY TERMINAL**
4. **REMOVE V-BANK COVER (See page ES-428)**
5. **REMOVE AIR CLEANER ASSEMBLY (See page ES-429)**
6. **REMOVE THROTTLE BODY BRACKET (See page FU-11)**
7. **REMOVE OIL BAFFLE PLATE (See page FU-11)**
8. **REMOVE NO. 1 SURGE TANK STAY (See page FU-11)**
9. **REMOVE NO. 2 SURGE TANK STAY (See page FU-12)**
10. **REMOVE INTAKE AIR SURGE TANK (See page FU-12)**
11. **DISCONNECT NO. 2 FUEL PIPE SUB-ASSEMBLY (See page FU-14)**
12. **REMOVE ENGINE COOLANT TEMPERATURE SENSOR**
    (a) Disconnect the connector.
    (b) Using a 19 mm deep socket wrench, remove the water temperature sensor and gasket.

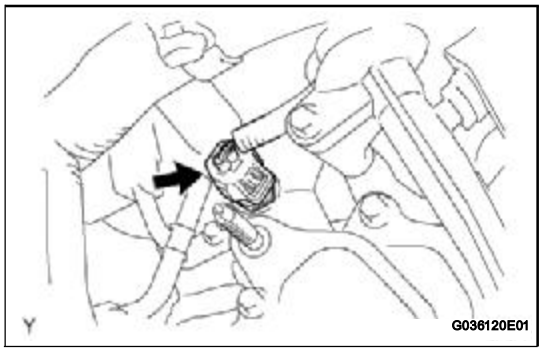

ES

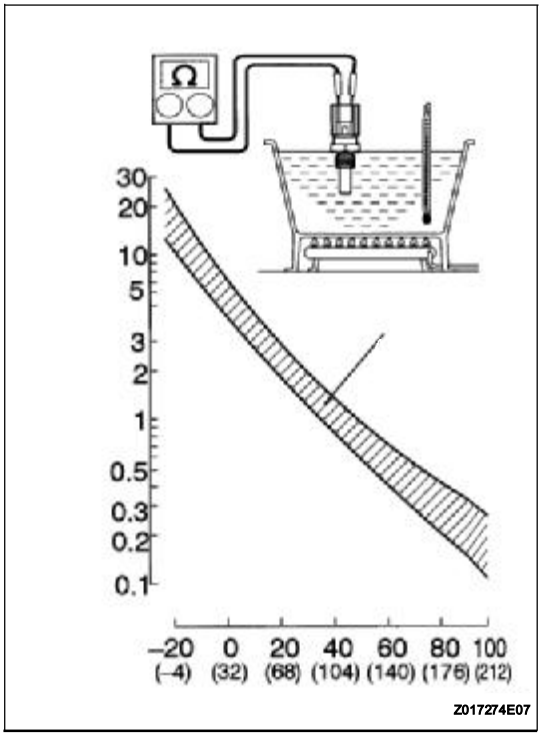

INSPECTION

1. **INSPECT ENGINE COOLANT TEMPERATURE SENSOR**
   (a) Check the resistance.
   (1) Using an ohmmeter, measure the resistance between the terminals.
   Standard resistance

Tester Connection	Specified Condition
1 (E2) - 2 (THW)	2.32 to 2.59 kΩ at 20°C (68°F)
1 (E2) - 2 (THW)	0.310 to 0.326 kΩ at 80°C (176°F)

NOTICE:
If checking the engine coolant temperature sensor in water, be careful not to allow water to enter the terminals. After checking, wipe the water off the engine coolant temperature sensor.
If the result is not as specified, replace the engine coolant temperature sensor.

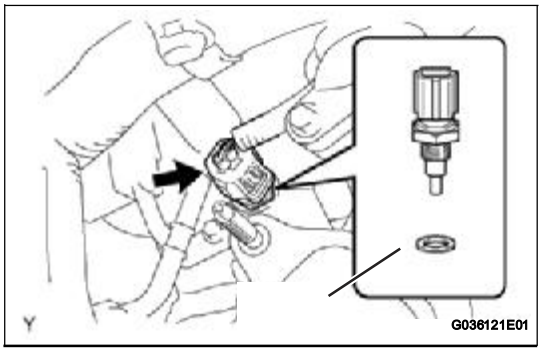

INSTALLATION

1. **INSTALL ENGINE COOLANT TEMPERATURE SENSOR**
   (a) Using a 19 mm deep socket wrench, install the water temperature sensor with a new gasket.
   Torque: 20 N*m (204 kgf*cm, 15 ft.*lbf)
   (b) Connect the connector.
2. **CONNECT NO. 2 FUEL PIPE SUB-ASSEMBLY (See page FU-17)**
3. **INSTALL INTAKE AIR SURGE TANK (See page FU-17)**
4. **INSTALL NO. 2 SURGE TANK STAY (See page FU-19)**
5. **INSTALL NO. 1 SURGE TANK STAY (See page FU-19)**
6. **INSTALL OIL BAFFLE PLATE (See page FU-19)**
7. **INSTALL THROTTLE BODY BRACKET (See page FU-19)**
8. **INSTALL AIR CLEANER ASSEMBLY (See page ES-431)**
9. **CONNECT CABLE TO NEGATIVE BATTERY TERMINAL**
   Torque: 3.9 N*m (40 kgf*cm, 35 in.*lbf)
10. **ADD ENGINE COOLANT (See page CO-3)**
11. **CHECK FOR ENGINE COOLANT LEAKAGE (See page CO-4)**
12. **CHECK FOR FUEL LEAKAGE**
13. **INSTALL V-BANK COVER (See page ES-431)**

THROTTLE BODY

COMPONENTS

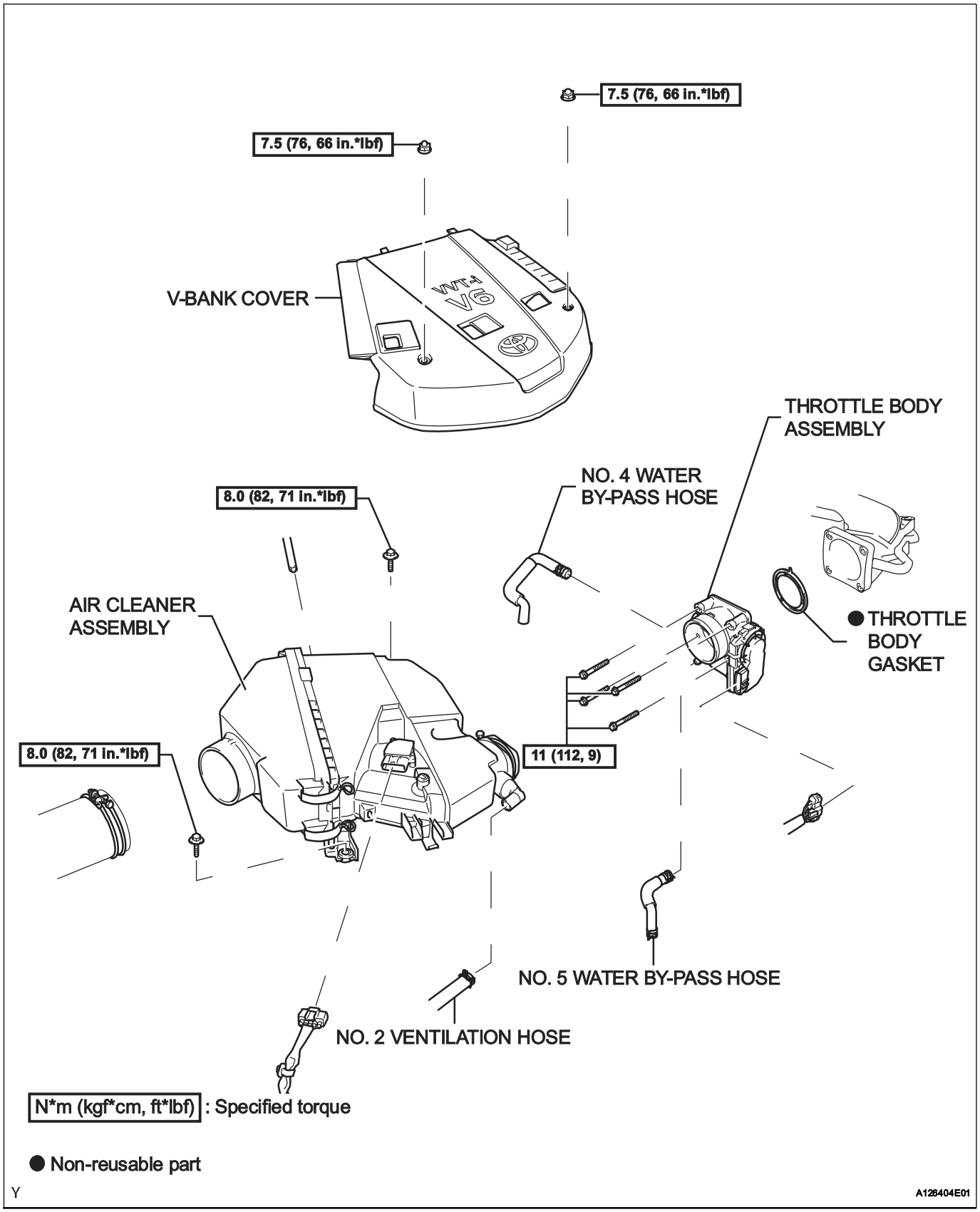

ON-VEHICLE INSPECTION

1. INSPECT THROTTLE BODY ASSEMBLY

(a) Listen to the throttle control motor operating sounds.
  (1) Turn the ignition switch to ON.
  (2) When pressing the accelerator pedal, listen to the running sound of the motor. Make sure no friction noises come from the motor.
  If friction noises occur, check the throttle body, wire harness and ECM.

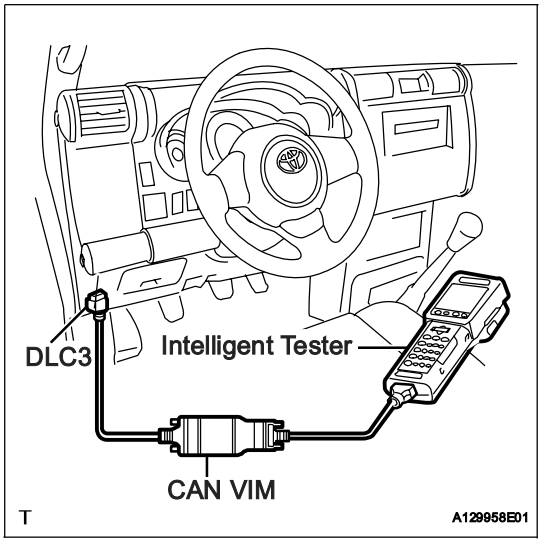

(b) Check the throttle position sensor.
  (1) Turn the ignition switch to ON.
  (2) Turn the intelligent tester ON.
  (3) Start the engine and warm it up.
  (4) Select the following menu items: DIAGNOSIS / ENHANCED OBD II / DATA LIST / PRIMARY / THROTTLE POS .
  (5) Depress the accelerator pedal. When the throttle valve is fully open, check that the THROTTLE POS value is within the specification.
  Standard:
  60% or more
  NOTICE:
  When checking the standard throttle valve opening percentage, the transmission should be in the neutral position.
  If the result is not as specified, check the throttle body, wire harness and ECM.

REMOVAL

1. **DISCONNECT CABLE FROM NEGATIVE BATTERY TERMINAL**

2. **DRAIN ENGINE COOLANT (See page CO-3)**

3. **REMOVE V-BANK COVER**
   (a) Remove the 2 nuts, then remove the V-bank cover.

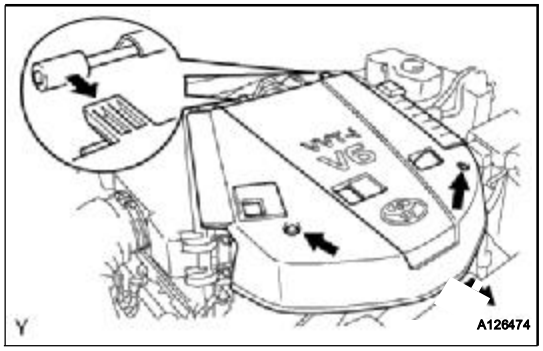

4. **REMOVE AIR CLEANER ASSEMBLY**
   (a) Disconnect the No. 2 ventilation hose.

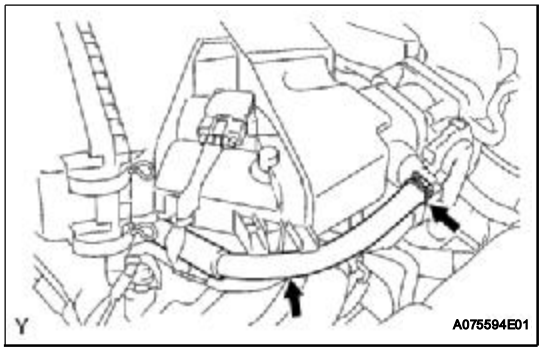

   (b) Disconnect the vacuum hose.
   (c) Disconnect the mass air flow meter connector.
   (d) Disengage the 2 wire harness clamps.

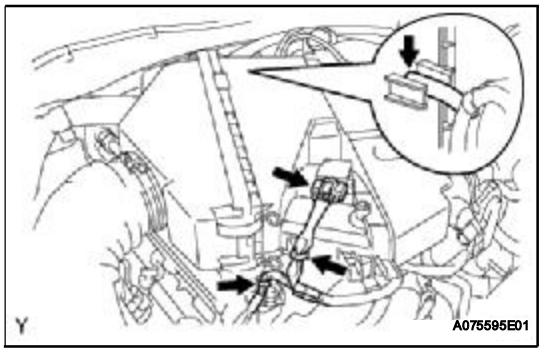

   (e) Loosen the 2 hose clamps.
   (f) Remove the 2 bolts.
   (g) Disconnect the air cleaner hose and remove the air cleaner.

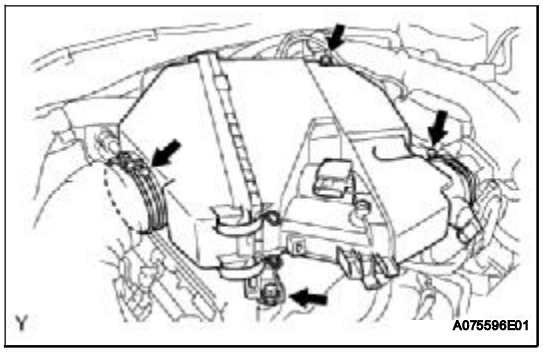

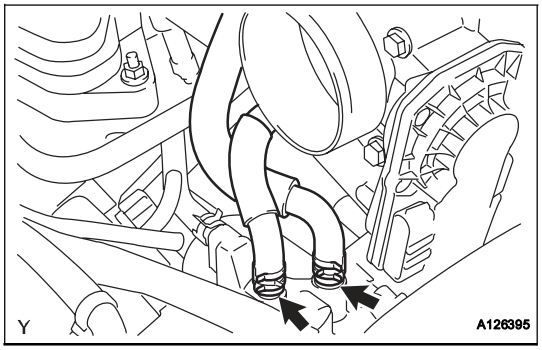

5. REMOVE THROTTLE WITH MOTOR BODY ASSEMBLY

(a) Disconnect the No. 5 water by-pass hose.
(b) Disconnect the No. 4 water by-pass hose.

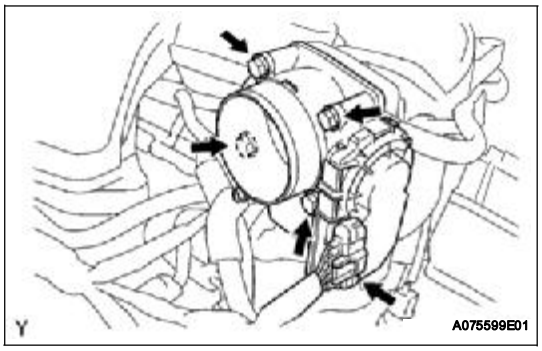

(c) Disconnect the throttle motor connector.
(d) Remove the 4 bolts, then remove the throttle w/ motor body and gasket.

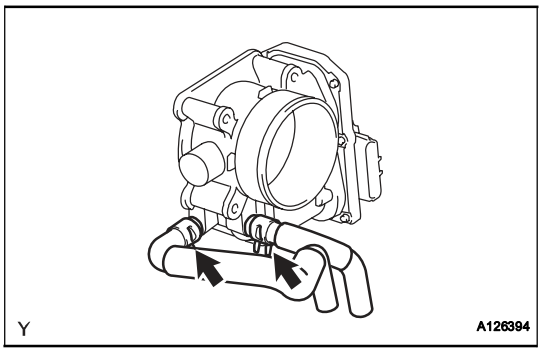

(e) Remove the No. 5 water by-pass hose.
(f) Remove the No. 4 water by-passe hose.

INSPECTION

1. INSPECT THROTTLE WITH MOTOR BODY ASSEMBLY

(a) Check the resistance.
(1) Using an ohmmeter, measure the resistance between the terminals.

Standard resistance

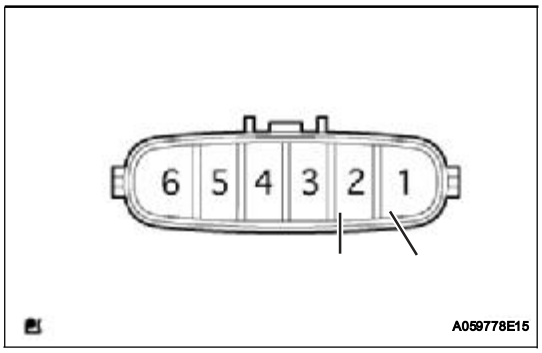

Tester Connection	Specified Condition
1 (M-) - 2 (M+)	0.3 to 100 Ω at 20°C (68°F)

If the result is not as specified, replace the throttle with motor body assembly.

INSTALLATION

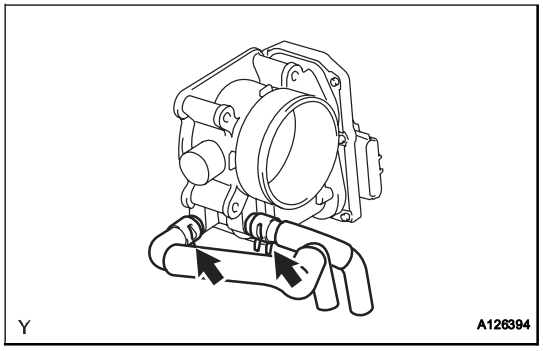

1. INSTALL THROTTLE WITH MOTOR BODY ASSEMBLY

(a) Connect the No. 4 water by-pass hose to the throttle body.

(b) Connect the No. 5 water by-passe hose to the throttle body.

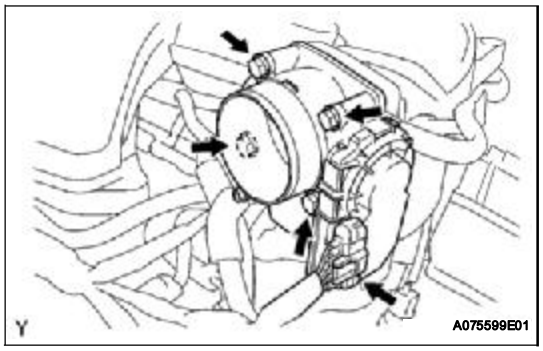

(c) Install a new gasket and the throttle with motor body with the 4 bolts.
Torque: 11 N*m (112 kgf*cm, 9 ft.*lbf)

(d) Connect the throttle motor connector.

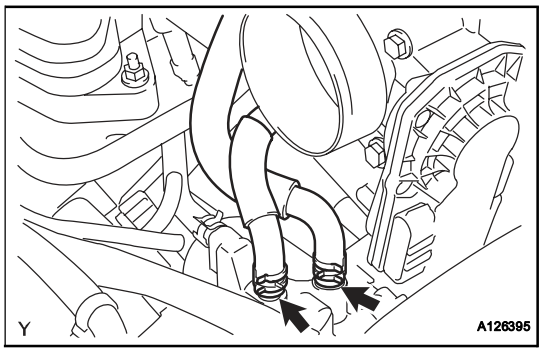

(e) Connect the No. 4 water by-pass hose.

(f) Connect the No. 5 water by-pass hose.

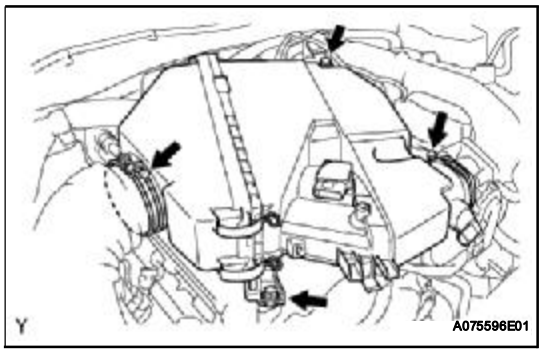

2. INSTALL AIR CLEANER ASSEMBLY

(a) Install the air cleaner onto the throttle body.

(b) Connect the air cleaner hose to the air cleaner.

(c) Install the air cleaner with the 2 bolts.
Torque: 8.0 N*m (82 kgf*cm, 71 in.*lbf)

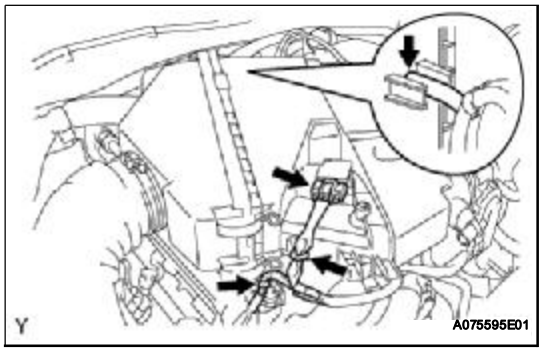

(d) Connect the mass air flow meter connector.

(e) Engage the 2 wire harness clamps.

(f) Connect the vacuum hose.

ES

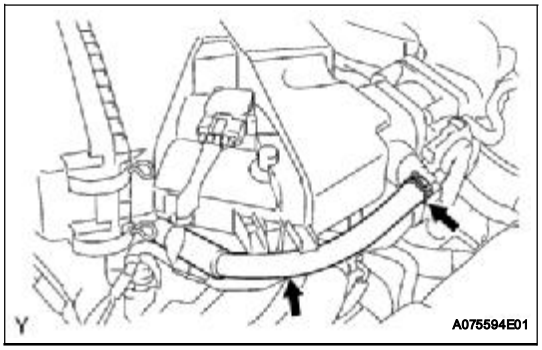

(g) Connect the No. 2 ventilation hose.

3. **CONNECT CABLE TO NEGATIVE BATTERY TERMINAL**
Torque: 3.9 N*m (40 kgf*cm, 35 in.*lbf)

4. **ADD ENGINE COOLANT (See page CO-3)**

5. **CHECK FOR ENGINE COOLANT LEAKAGE (See page CO-4)**

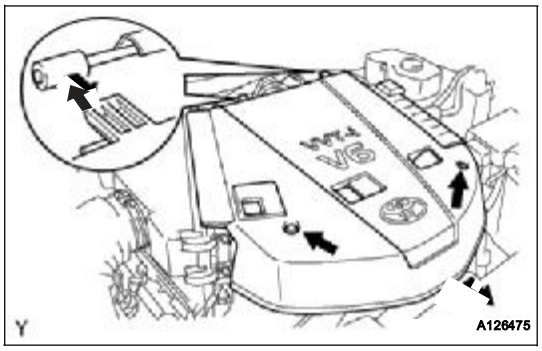

6. **INSTALL V-BANK COVER**
(a) Install the V-bank cover with the 2 nuts.
Torque: 7.5 N*m (76 kgf*cm, 66 in.*lbf)

ES

KNOCK SENSOR

COMPONENTS

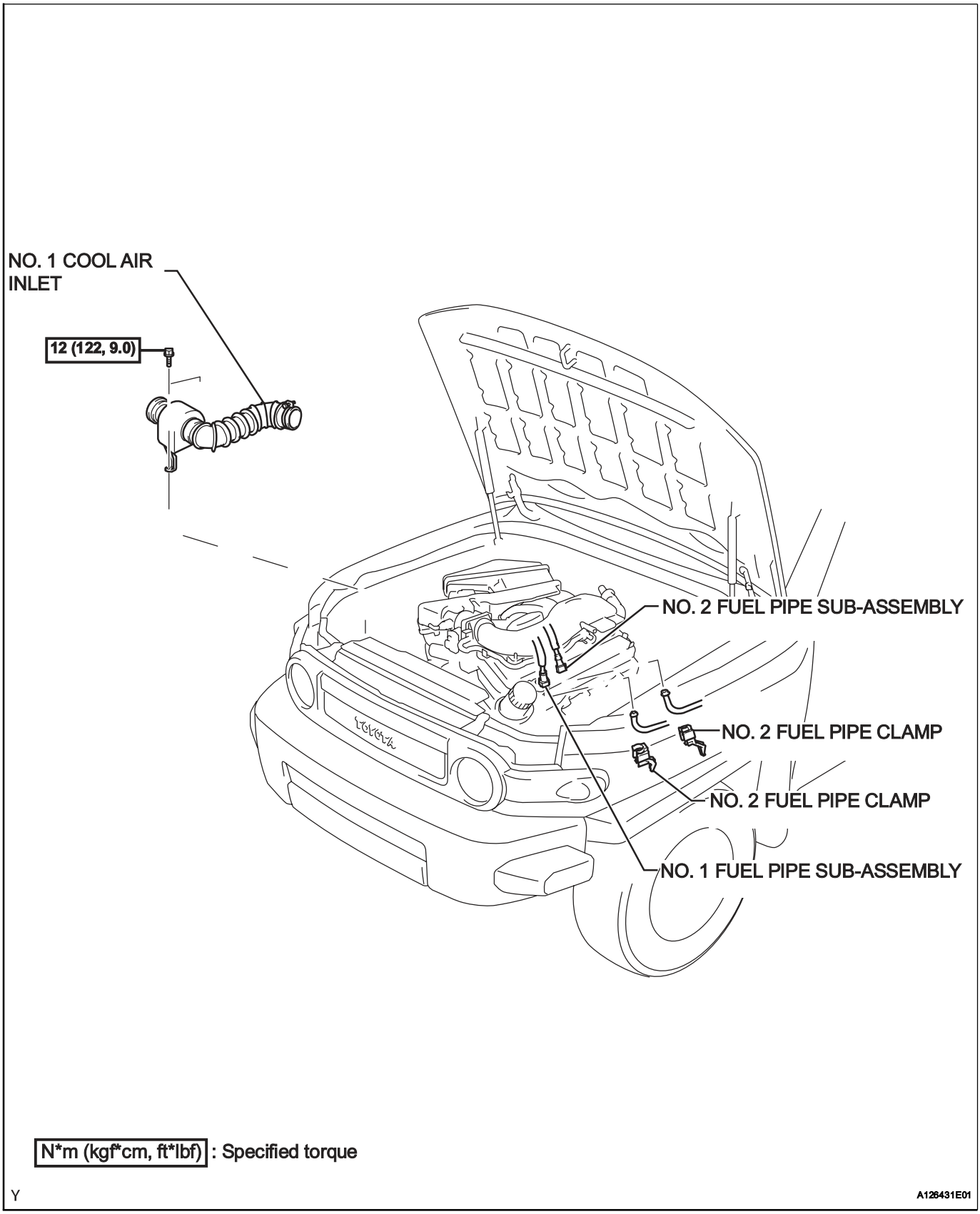

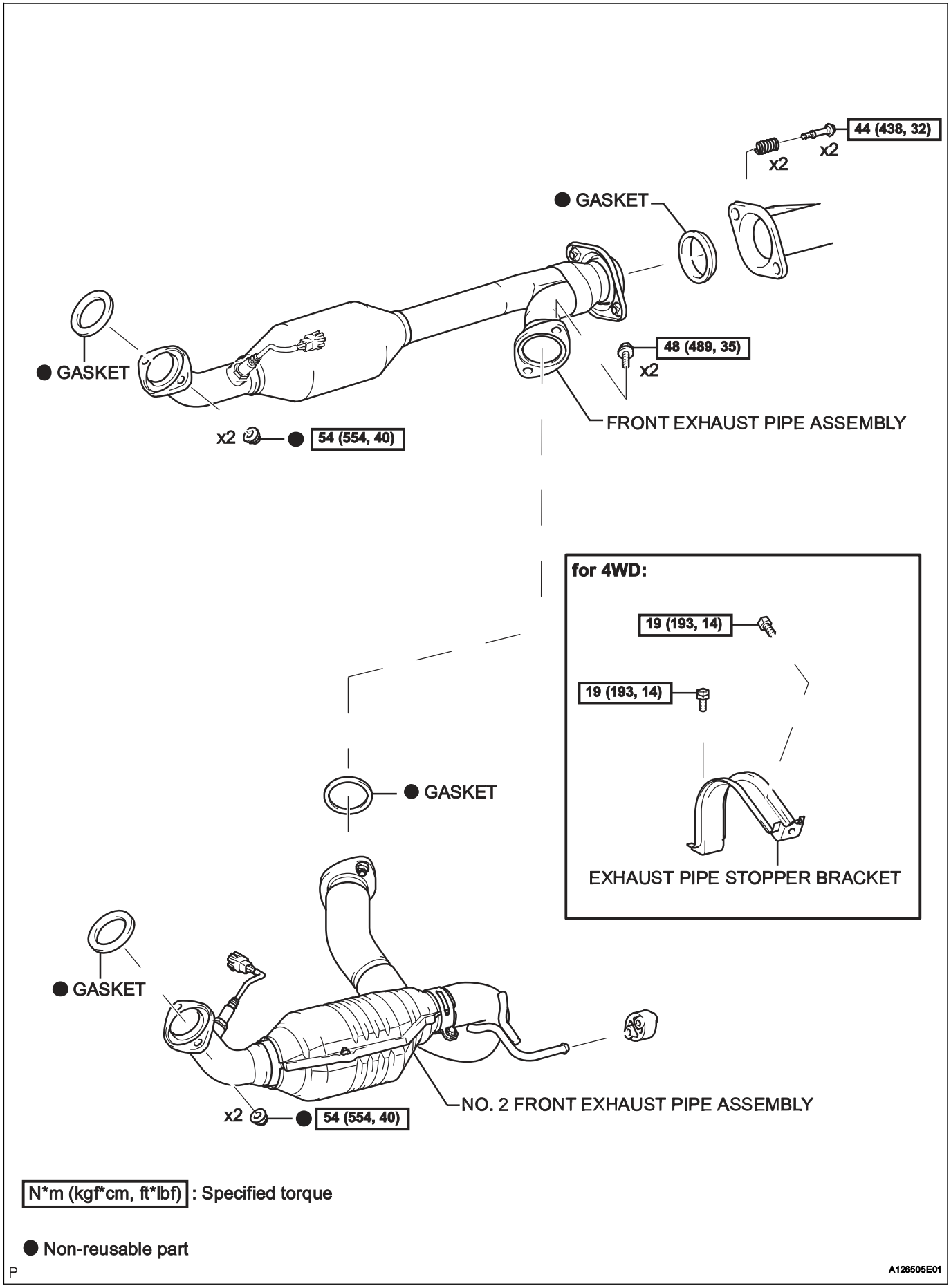
44 (438, 32)
x2
x2
GASKET
GASKET
48 (489, 35)
x2
FRONT EXHAUST PIPE ASSEMBLY
x2
54 (554, 40)
for 4WD:
19 (193, 14)
19 (193, 14)
EXHAUST PIPE STOPPER BRACKET
GASKET
GASKET
NO. 2 FRONT EXHAUST PIPE ASSEMBLY
x2
54 (554, 40)
N*m (kgf*cm, ft*lbf) : Specified torque
Non-reusable part
P
A126505E01

ES

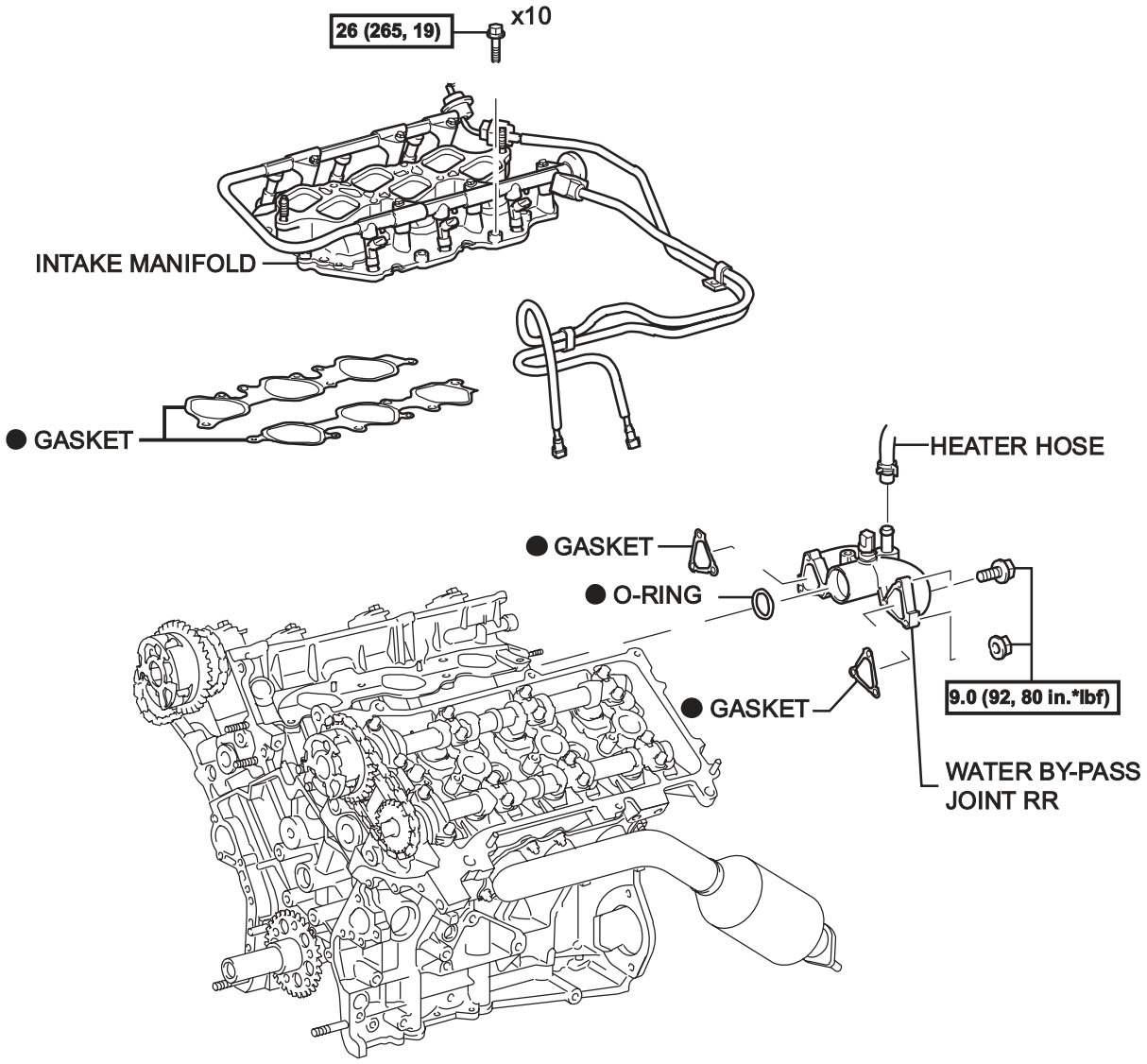

N*m (kgf*cm, ft*lbf) : Specified torque

● Non-reusable part

Y

A126432E01

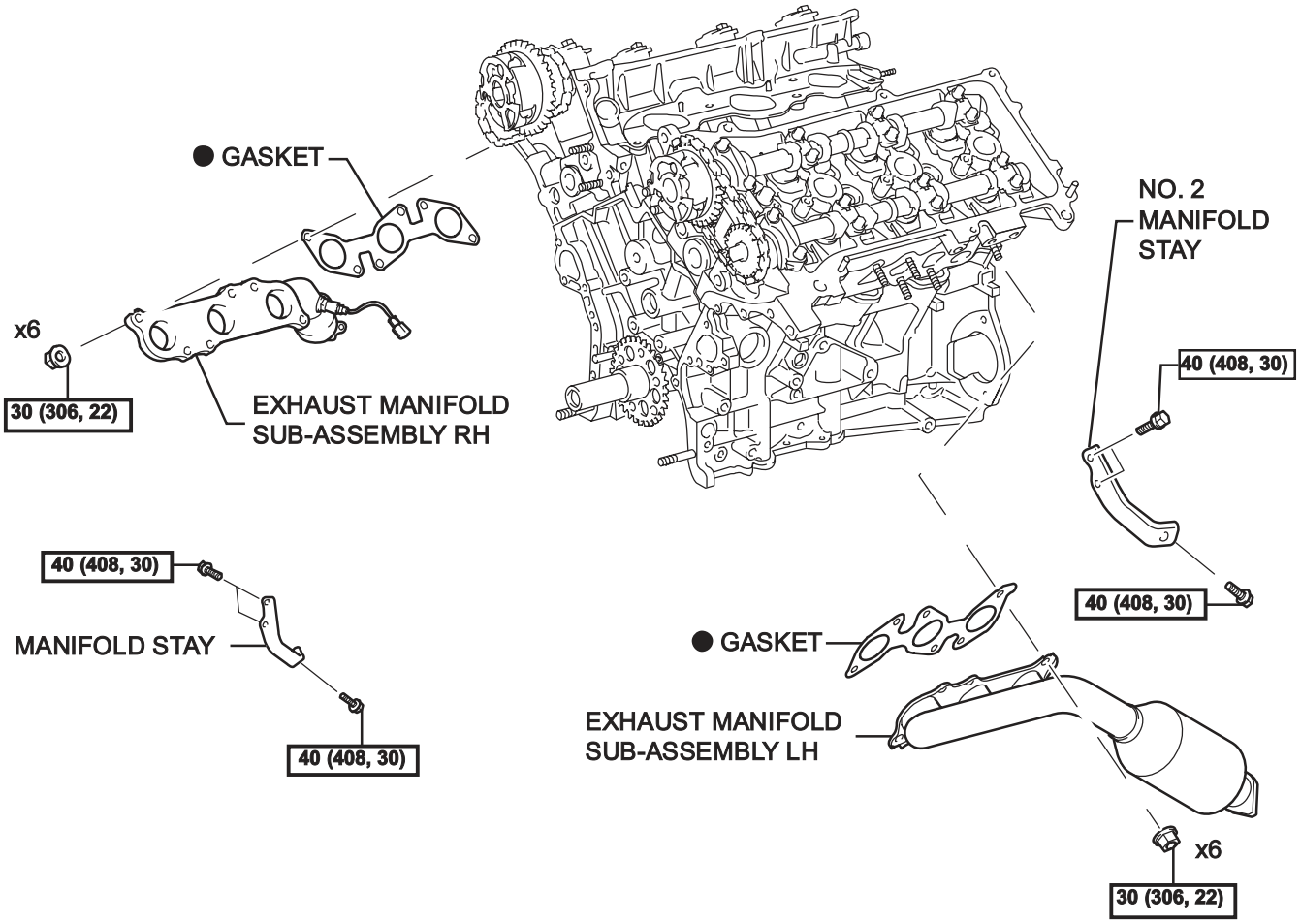

N*m (kgf*cm, ft*lbf) : Specified torque

● Non-reusable part

Y

A126433E01

ES

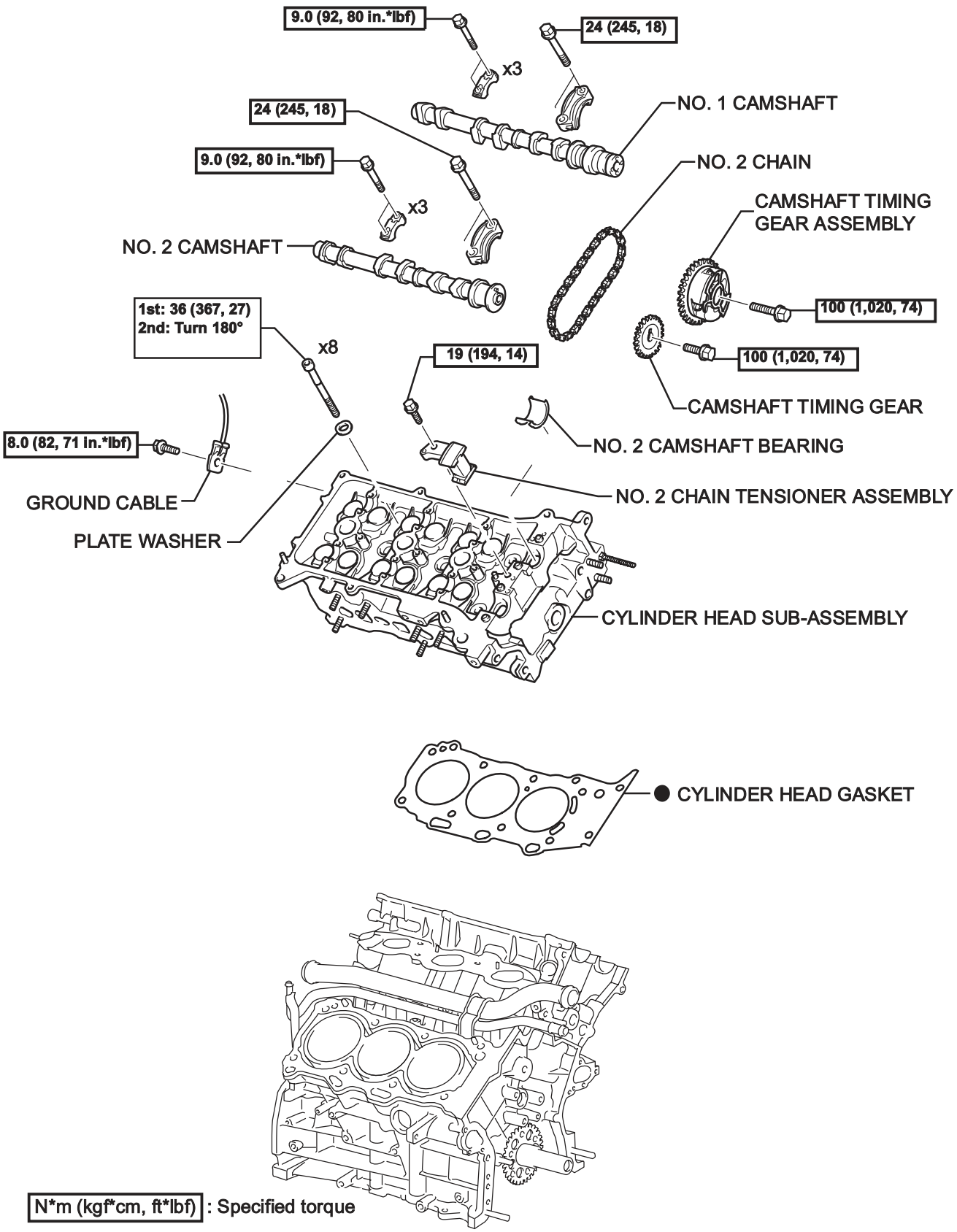
9.0 (92, 80 in.*lbf)
x3
24 (245, 18)
NO. 1 CAMSHAFT
24 (245, 18)
9.0 (92, 80 in.*lbf)
x3
NO. 2 CHAIN
CAMSHAFT TIMING GEAR ASSEMBLY
NO. 2 CAMSHAFT
100 (1,020, 74)
1st: 36 (367, 27)
2nd: Turn 180°
x8
19 (194, 14)
100 (1,020, 74)
CAMSHAFT TIMING GEAR
8.0 (82, 71 in.*lbf)
NO. 2 CAMSHAFT BEARING
GROUND CABLE
NO. 2 CHAIN TENSIONER ASSEMBLY
PLATE WASHER
CYLINDER HEAD SUB-ASSEMBLY
● CYLINDER HEAD GASKET
N*m (kgf*cm, ft*lbf) : Specified torque
● Non-reusable part
Y
A126434E01

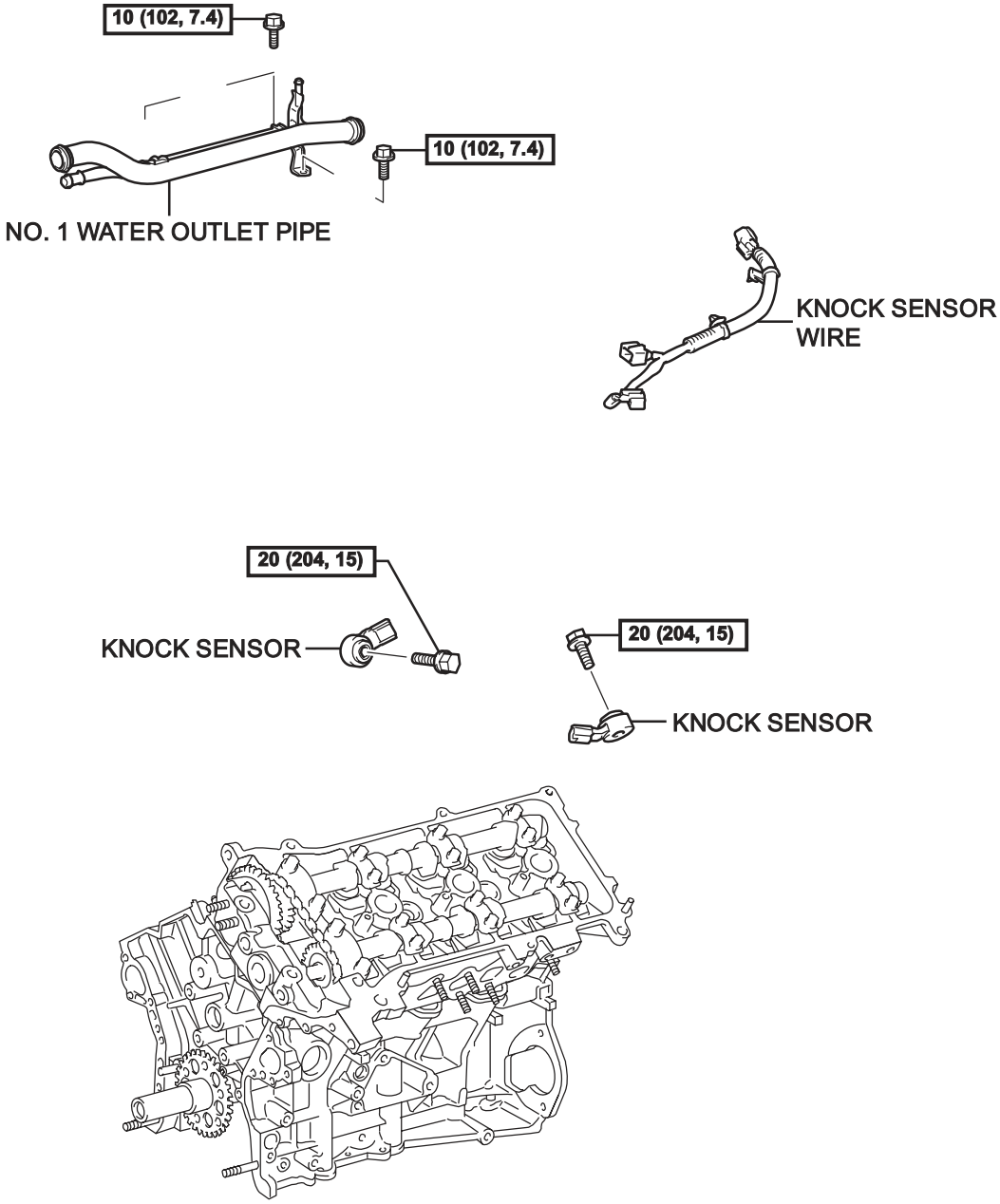

N*m (kgf*cm, ft*lbf) : Specified torque

Y

A126457E01

ES

REMOVAL

1. **DISCHARGE FUEL SYSTEM PRESSURE**
   (See page FU-1)
2. **REMOVE CHAIN SUB-ASSEMBLY**
   Refer to the procedures up to "REMOVE CHAIN SUB-ASSEMBLY" (See page EM-22).
3. **REMOVE NO. 1 COOL AIR INLET (See page EM-67)**
4. **REMOVE EXHAUST PIPE STOPPER BRACKET (for 4WD)**
5. **REMOVE NO. 2 FRONT EXHAUST PIPE ASSEMBLY (See page EM-67)**
6. **REMOVE FRONT EXHAUST PIPE ASSEMBLY (See page EM-68)**
7. **REMOVE MANIFOLD STAY (See page EM-68)**
8. **REMOVE EXHAUST MANIFOLD SUB-ASSEMBLY RH (See page EM-68)**
9. **DISCONNECT NO. 1 FUEL PIPE SUB-ASSEMBLY (See page FU-13)**
10. **DISCONNECT NO. 2 FUEL PIPE SUB-ASSEMBLY (See page FU-14)**
11. **REMOVE INTAKE MANIFOLD (See page EM-69)**
12. **REMOVE WATER BY-PASS JOINT RR (See page EM-69)**
13. **REMOVE CAMSHAFT TIMING GEARS AND NO. 2 CHAIN (for Bank 1) (See page EM-69)**
14. **REMOVE NO. 2 CHAIN TENSIONER ASSEMBLY (See page EM-70)**
15. **REMOVE CAMSHAFTS (for Bank 1) (See page EM-70)**
16. **REMOVE NO. 2 CAMSHAFT BEARING**
17. **REMOVE CYLINDER HEAD SUB-ASSEMBLY (See page EM-70)**
18. **REMOVE CYLINDER HEAD GASKET**
19. **DISCONNECT HEATER WATER INLET HOSE**
    (a) Disconnect the heater water inlet hose from the water outlet pipe.

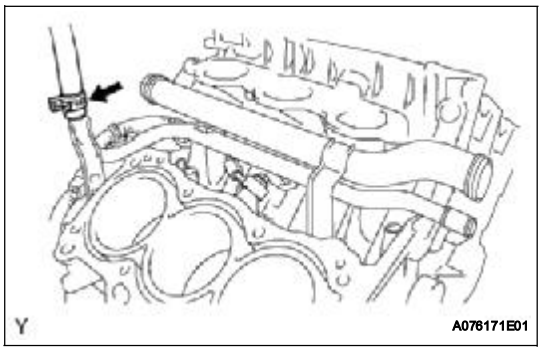

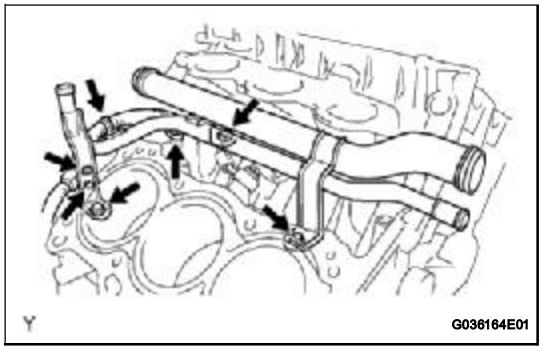

20. REMOVE NO. 1 WATER OUTLET PIPE

(a) Remove the 4 wire harness clamps.

(b) Remove the 3 bolts and water outlet pipe.

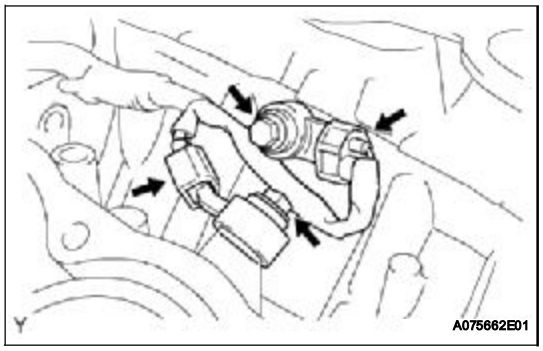

21. REMOVE KNOCK SENSOR

(a) Disconnect the 2 knock sensor connectors.

(b) Remove the 2 bolts and 2 knock sensors.

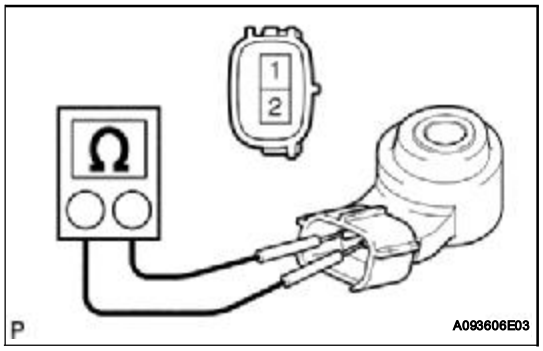

INSPECTION

1. INSPECT KNOCK SENSOR

(a) Check the resistance.

(1) Using an ohmmeter, measure the resistance between the terminals.

Standard resistance

Tester Connection	Specified Condition
1 (Ground) - 2 (Output)	120 to 180 kΩ at 20°C (68°F)

If the result is not as specified, replace the knock sensor.

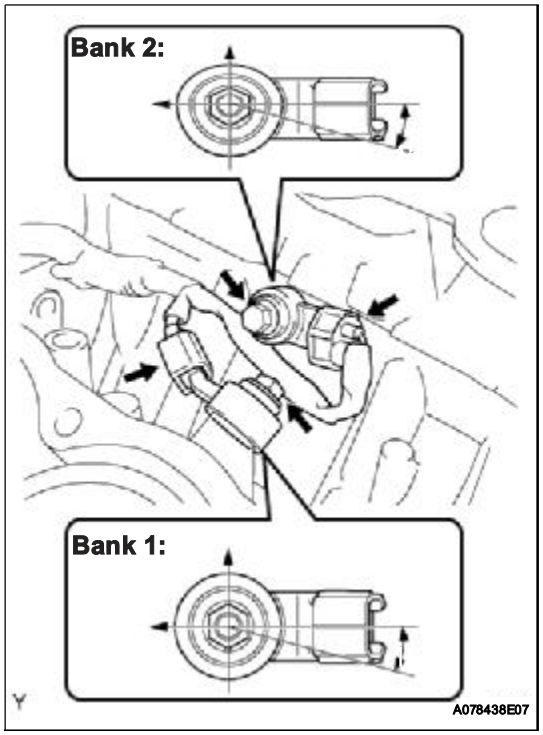

INSTALLATION

1. INSTALL KNOCK SENSOR

(a) Install the 2 knock sensors with the 2 bolts as shown in the illustration.

Torque: 20 N*m (204 kgf*cm, 15 ft.*lbf)

(b) Connect the 2 knock sensor connectors.

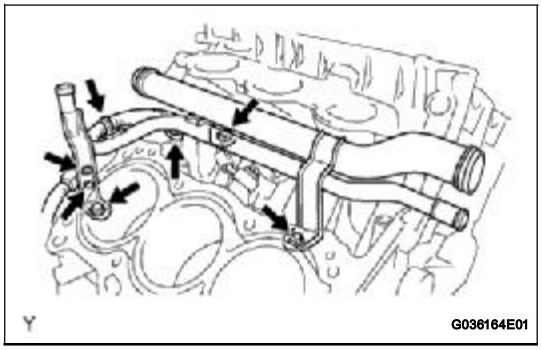

2. **INSTALL NO. 1 WATER OUTLET PIPE**
   (a) Install the water outlet pipe with the 3 bolts.
   Torque: 10 N*m (102 kgf*cm, 7.4 ft.*lbf)
   (b) Install the 4 wire harness clamps.

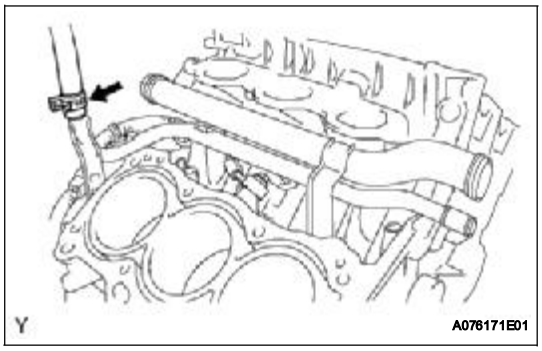

ES

3. **CONNECT HEATER WATER INLET HOSE**
   (a) Connect the heater water inlet hose to the water outlet pipe.
4. **INSPECT CYLINDER HEAD SET BOLT (See page EM-75)**
5. **INSTALL CYLINDER HEAD GASKET (See page EM-92)**
6. **INSTALL CYLINDER HEAD SUB-ASSEMBLY (See page EM-92)**
7. **INSTALL NO. 2 CAMSHAFT BEARING (See page EM-93)**
8. **INSTALL CAMSHAFTS (for Bank 1) (See page EM-93)**
9. **INSTALL NO. 2 CHAIN TENSIONER ASSEMBLY (See page EM-94)**
10. **INSTALL CAMSHAFT TIMING GEARS AND NO. 2 CHAIN (for Bank 1) (See page EM-95)**
11. **INSTALL WATER BY-PASS JOINT RR (See page EM-95)**
12. **INSTALL INTAKE MANIFOLD (See page EM-96)**
13. **CONNECT NO. 2 FUEL PIPE SUB-ASSEMBLY (See page FU-19)**
14. **CONNECT NO. 1 FUEL PIPE SUB-ASSEMBLY (See page FU-17)**
15. **INSTALL EXHAUST MANIFOLD SUB-ASSEMBLY RH (See page EM-97)**
16. **INSTALL MANIFOLD STAY (See page EM-97)**
17. **INSTALL FRONT EXHAUST PIPE ASSEMBLY (See page EM-97)**
18. **INSTALL NO. 2 FRONT EXHAUST PIPE ASSEMBLY (See page EM-99)**
19. **INSTALL EXHAUST PIPE STOPPER BRACKET (for 4WD)**
20. **INSTALL NO. 1 COOL AIR INLET (See page EM-99)**

21. **INSTALL CHAIN SUB-ASSEMBLY**
    Refer to the procedures up to "INSTALL CHAIN TENSIONER SLIPPER" (See page EM-27).
22. **CHECK FOR FUEL LEAKAGE**
23. **CHECK FOR EXHAUST GAS LEAKAGE**
24. **INSPECT IGNITION TIMING (See page EM-1)**
25. **INSPECT ENGINE IDLING SPEED (See page EM-2)**
26. **INSPECT COMPRESSION (See page EM-3)**
27. **INSPECT CO/HC (See page EM-3)**
28. **INSPECT AND ADJUST FRONT WHEEL ALIGNMENT** (See page SP-2)

EFI RELAY

ON-VEHICLE INSPECTION

1. DISCONNECT CABLE FROM NEGATIVE BATTERY TERMINAL

2. REMOVE EFI RELAY

(a) Remove the relay block cover upper.

(b) Remove the EFI relay.

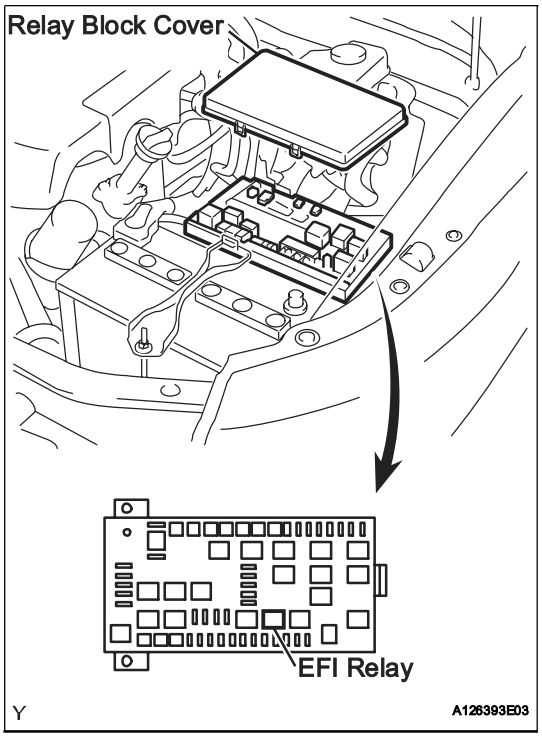

3. INSPECT EFI RELAY

(a) Check the resistance.

(1) Using an ohmmeter, measure the resistance between the terminals.

Standard resistance

Tester Connection	Specified Condition
3 - 5	10 kΩ or higher
	Below 1 Ω (Battery voltage applied to terminals 1 and 2)

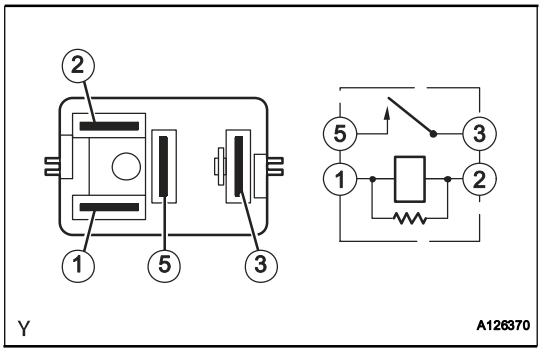

If the result is not as specified, replace the EFI relay.

4. INSTALL EFI RELAY

(a) Install the EFI relay.

(b) Install the relay block cover upper.

5. CONNECT CABLE TO NEGATIVE BATTERY TERMINAL

Torque: 3.9 N*m (40 kgf*cm, 35 in.*lbf)

CIRCUIT OPENING RELAY

ON-VEHICLE INSPECTION

1. DISCONNECT CABLE FROM NEGATIVE BATTERY TERMINAL

2. REMOVE CIRCUIT OPENING RELAY

(a) Remove the relay block cover upper.

(b) Remove the circuit opening relay.

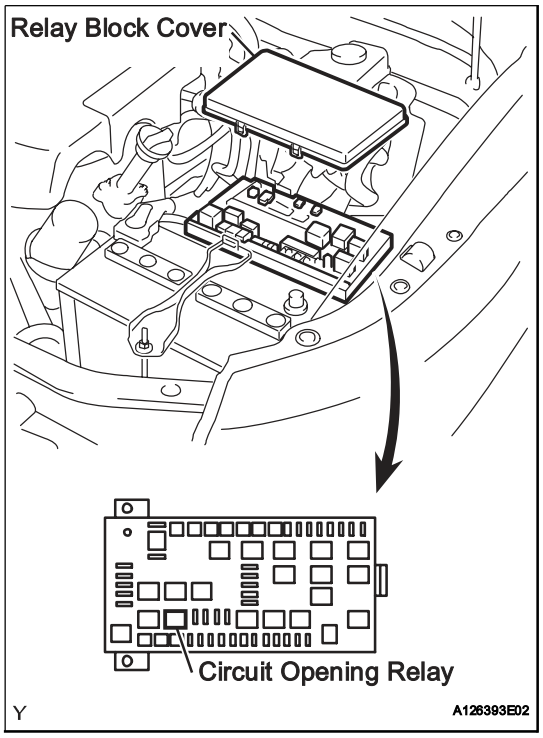

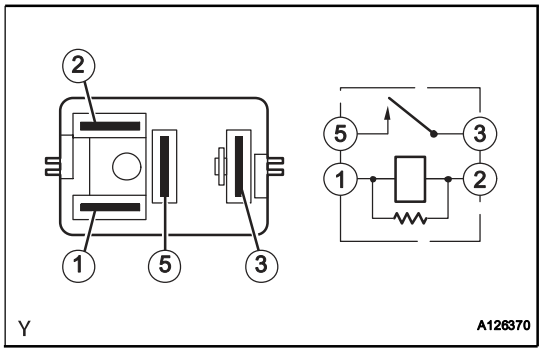

3. INSPECT CIRCUIT OPENING RELAY

(a) Check the resistance.

(1) Using an ohmmeter, measure the resistance between the terminals.

Standard resistance

Tester Connection	Specified Condition
3 - 5	10 kΩ or higher
	Below 1 Ω (Battery voltage applied to terminals 1 and 2)

If the result is not as specified, replace the circuit opening relay.

4. INSTALL CIRCUIT OPENING RELAY

(a) Install the circuit opening relay.

(b) Install the relay block cover upper.

5. CONNECT CABLE TO NEGATIVE BATTERY TERMINAL

Torque: 3.9 N*m (40 kgf*cm, 35 in.*lbf)

FUEL PUMP RELAY

ON-VEHICLE INSPECTION

1. DISCONNECT CABLE FROM NEGATIVE BATTERY TERMINAL

2. REMOVE FUEL PUMP RELAY

(a) Remove the relay block cover upper.

(b) Remove the fuel pump relay.

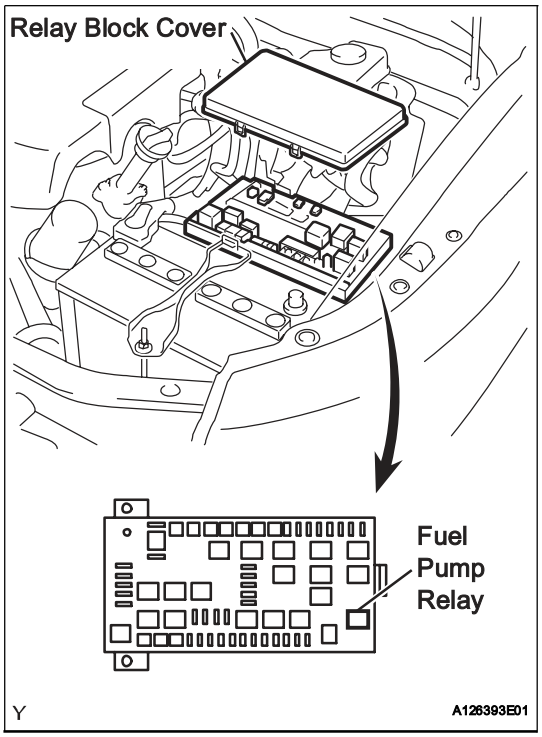

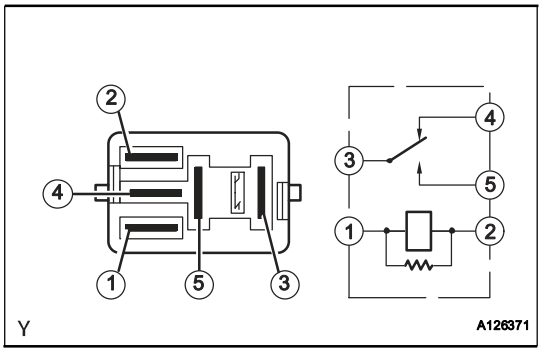

3. INSPECT FUEL PUMP RELAY

(a) Check the resistance.

(1) Using an ohmmeter, measure the resistance between the terminals.

Standard resistance

Tester Connection	Specified Condition
3 - 4	Below 1 Ω
	10 kΩ or higher (Battery voltage applied to terminals 1 and 2)
3 - 5	10 kΩ or higher
	Below 1 Ω (Battery voltage applied to terminals 1 and 2)

If the result is not as specified, replace the fuel pump relay.

4. INSTALL FUEL PUMP RELAY

(a) Install the fuel pump relay.

(b) Install the relay block cover upper.

5. CONNECT CABLE TO NEGATIVE BATTERY TERMINAL

Torque: 3.9 N*m (40 kgf*cm, 35 in.*lbf)

ECM

COMPONENTS

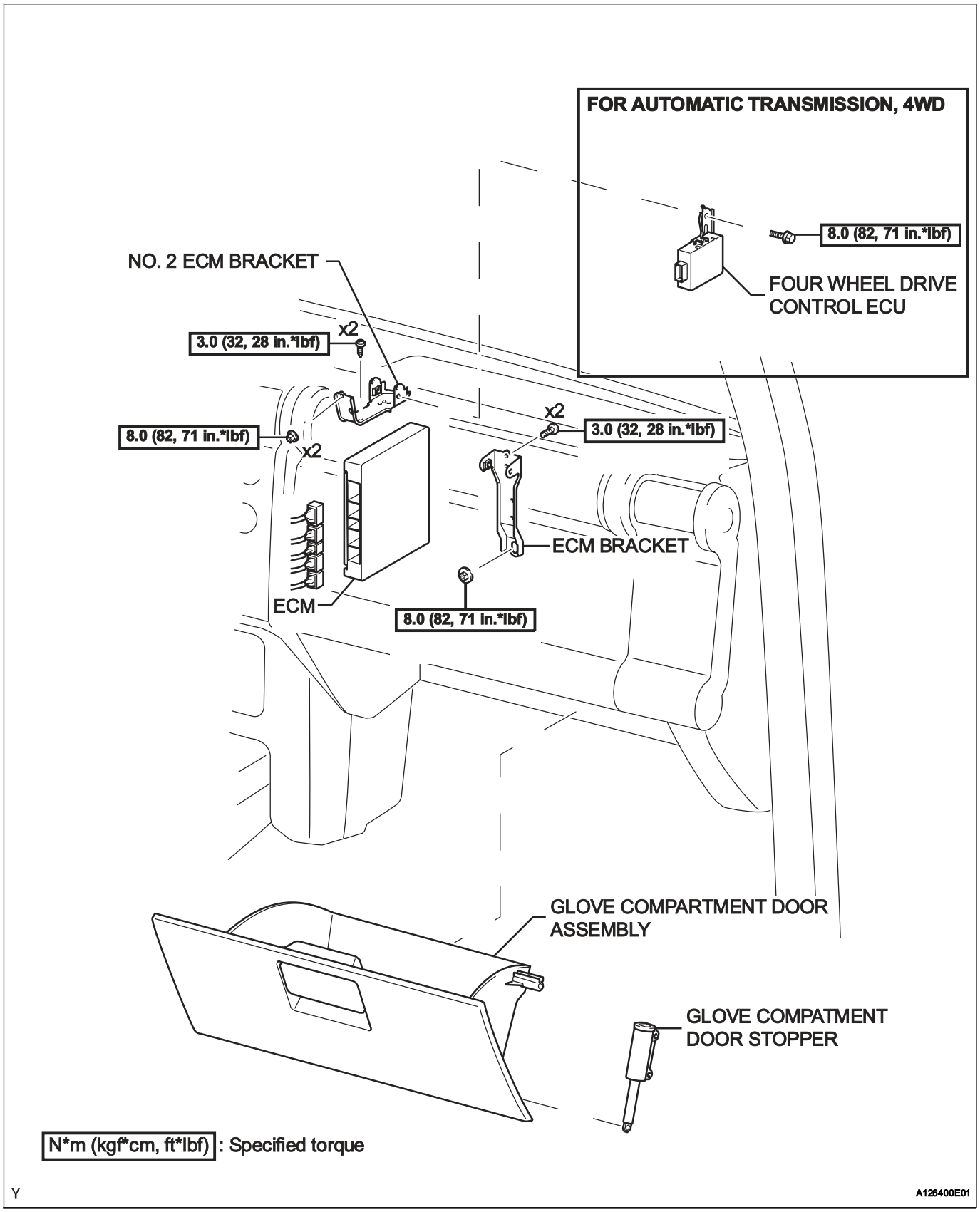

ES

REMOVAL

NOTICE:

- **Perform the RESET MEMORY (AT initialization) when replacing the automatic transmission assembly, engine assembly or ECM (See page AT-19 or AT-19).**
- **Perform the REGISTRATION (VIN registration) when replacing the ECM (See page ES-15).**
- **If the ECM has been replaced or RESET MEMORY (AT initialization) has been performed, set up the function of the ATF (Automatic Transmission Fluid) temperature warning lamp (See page AT-19 or AT-19).**

1. DISCONNECT CABLE FROM NEGATIVE BATTERY TERMINAL

2. REMOVE GLOVE COMPARTMENT DOOR ASSEMBLY (See page IP-15)

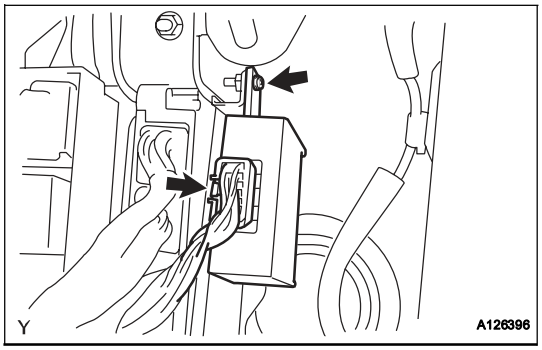

3. REMOVE FOUR WHEEL DRIVE CONTROL ECU (for Automatic Transmission 4WD)

(a) Disconnect the connector.

(b) Remove the screw and four wheel drive control ECU.

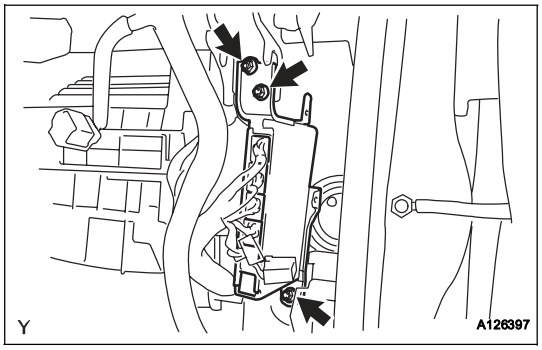

4. REMOVE ECM

(a) Disconnect the 5 connectors.

(b) Remove the 3 nuts, then remove the ECM.

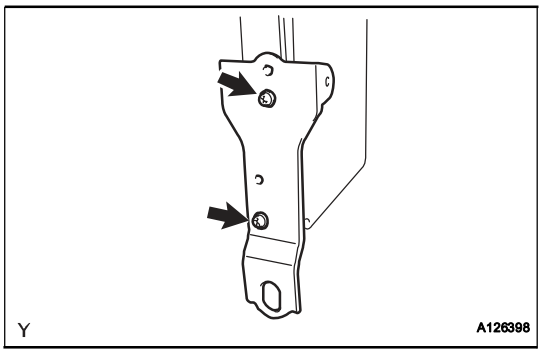

5. REMOVE ECM BRACKET

(a) Remove the 2 screws, then remove the ECM bracket.

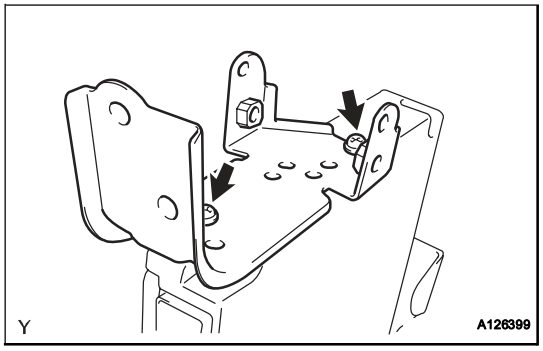

6. **REMOVE NO. 2 ECM BRACKET**
   (a) Remove the 2 screws, then remove the No. 2 ECM bracket.

INSTALLATION

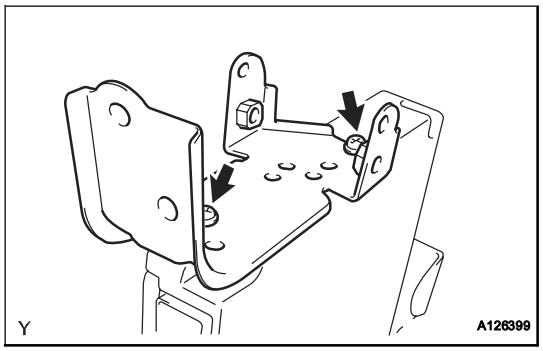

1. **INSTALL NO. 2 ECM BRACKET**
   (a) Install the No. 2 ECM bracket with the 2 screws.
   Torque: 3.0 N*m (32 kgf*cm, 28 in.*lbf)

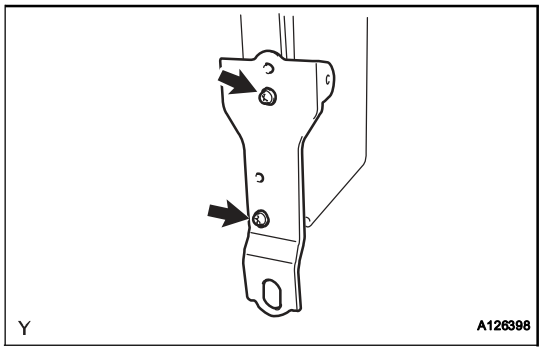

2. **INSTALL ECM BRACKET**
   (a) Install the ECM bracket with the 2 screws.
   Torque: 3.0 N*m (32 kgf*cm, 28 in.*lbf)

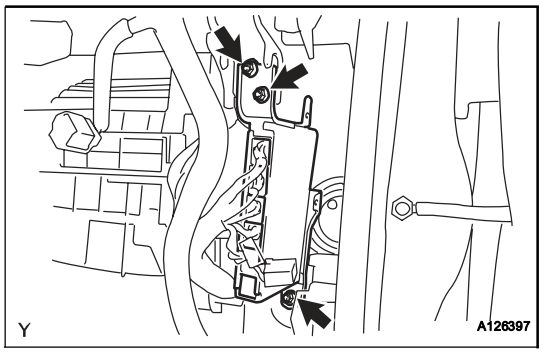

3. **INSTALL ECM**
   (a) Install the ECM with the 3 nuts.
   Torque: 8.0 N*m (82 kgf*cm, 71 in.*lbf)
   (b) Connect the 5 connectors.

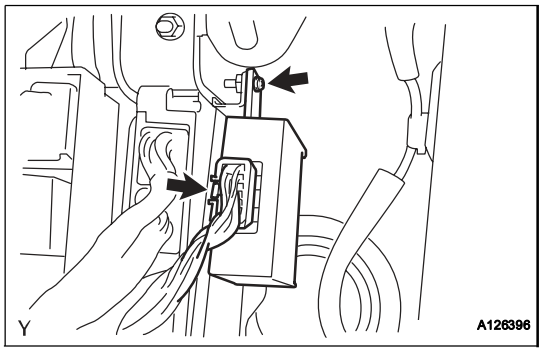

4. **INSTALL FOUR WHEEL DRIVE CONTROL ECU (for Automatic Transmission 4WD)**
   (a) Install the four wheel drive control ECU with the bolt.
   Torque: 8.0 N*m (82 kgf*cm, 71 in.*lbf)
   (b) Connect the connector.
5. **INSTALL GLOVE COMPARTMENT DOOR ASSEMBLY (See page IP-28)**
6. **CONNECT CABLE TO NEGATIVE BATTERY TERMINAL**
   Torque: 3.9 N*m (40 kgf*cm, 35 in.*lbf)

ES

ACCELERATOR PEDAL

COMPONENTS

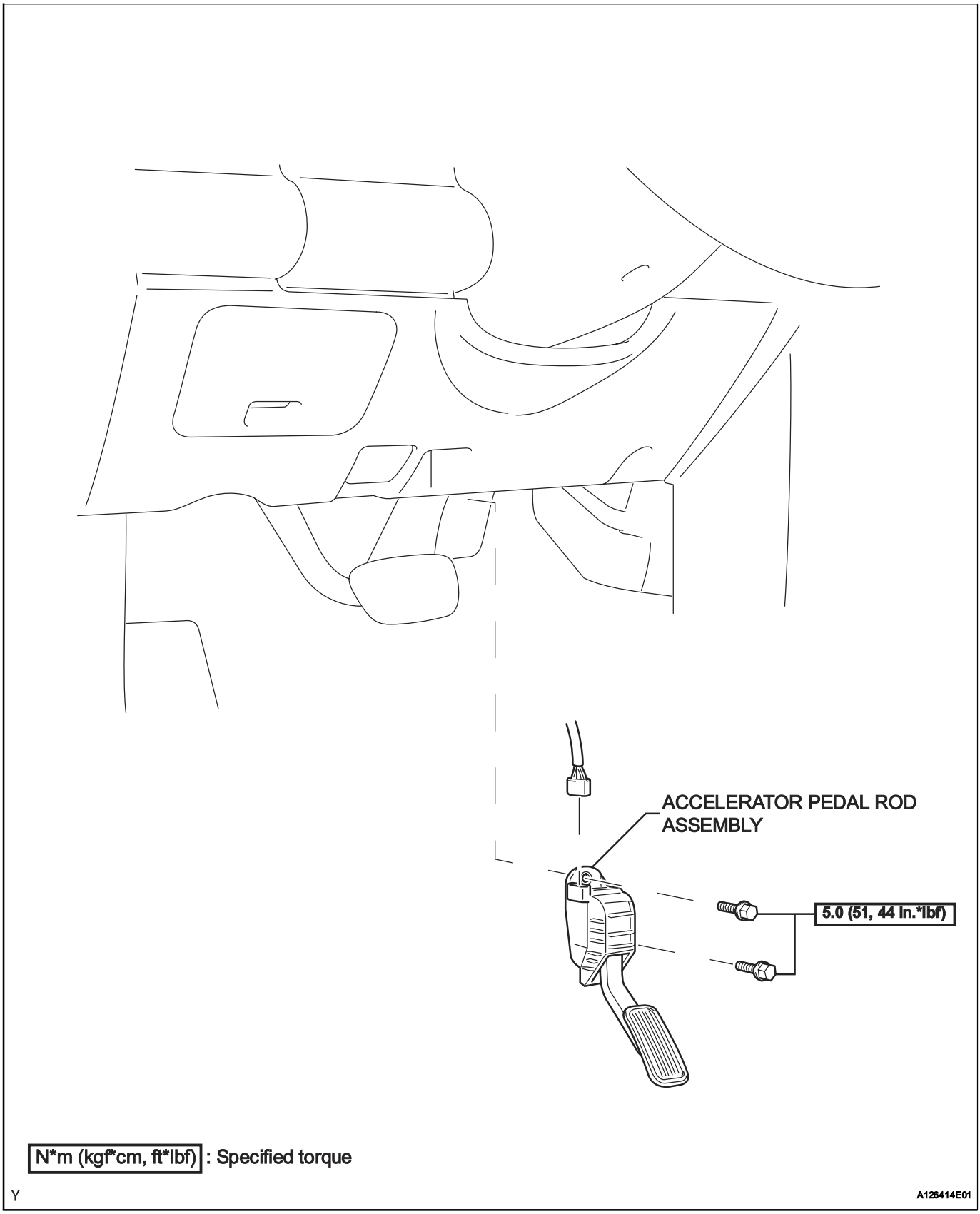

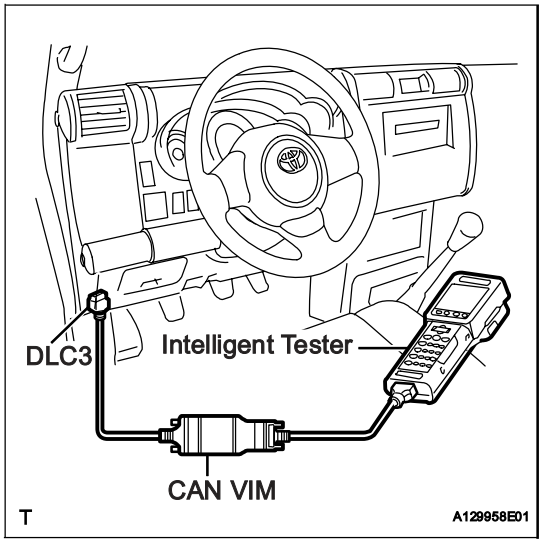

ON-VEHICLE INSPECTION

1. INSPECT ACCELERATOR PEDAL ROD

(a) Check the voltage.

(1) Turn the ignition switch to ON.

(2) Turn the intelligent tester ON.

(3) Start the engine and warm it up.

(4) Select the following menu items: DIAGNOSIS / ENHANCED OBD II / DATA LIST / PRIMARY / ACCEL POS #1, ACCEL POS #2.

(5) Operate the accelerator pedal, then check that the ACCEL POS #1 and ACCEL POS #2 values are within the specifications.

Standard voltage:

ACCELE POS #1

Accelerator Pedal Condition	Specified Condition
Released	0.5 to 1.1 V
Depressed	2.6 to 4.5 V

ACCELE POS #2

Accelerator Pedal Condition	Specified Condition
Released	1.2 to 2.0 V
Depressed	3.4 to 5.0 V

If the result is not as specified, check the accelerator pedal rod, wire harness and ECM.

ES

REMOVAL

1. **DISCONNECT CABLE FROM NEGATIVE BATTERY TERMINAL**

2. **REMOVE ACCELERATOR PEDAL ROD ASSEMBLY**
   (a) Disconnect the accelerator position sensor connector.
   (b) Remove the 2 bolts, then remove the accelerator pedal.

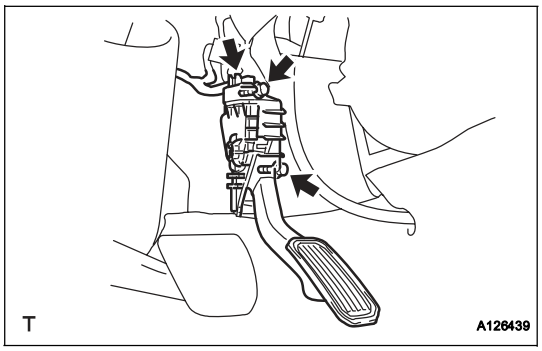

INSTALLATION

1. **INSTALL ACCELERATOR PEDAL ROD ASSEMBLY**
   NOTICE:
   - **Avoid any physical impact to the accelerator pedal assembly.**
   - **Do not disassemble the accelerator pedal assembly.**

   (a) Install the accelerator pedal with the 2 bolts.
   Torque: 5.0 N*m (51 kgf*cm, 44 in.*lbf)
   (b) Connect the accelerator position sensor connector.

2. **CONNECT CABLE TO NEGATIVE BATTERY TERMINAL**
   Torque: 3.9 N*m (40 kgf*cm, 35 in.*lbf)

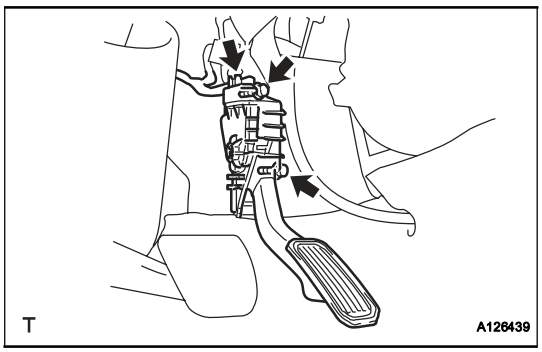

ENGINE

ON-VEHICLE INSPECTION

1. **INSPECT ENGINE COOLANT (See page CO-2)**
2. **INSPECT ENGINE OIL (See page LU-2)**
3. **INSPECT BATTERY (See page CH-4)**
4. **INSPECT AIR CLEANER FILTER ELEMENT SUB-ASSEMBLY**
5. **INSPECT SPARK PLUG (See page IG-5)**
6. **INSPECT FAN AND GENERATOR V BELT (See page EM-6)**
7. **INSPECT IGNITION TIMING**

   NOTICE:
   - **Turn all the electrical systems OFF.**
   - **Conduct the inspection when the cooling fan motor is turned OFF.**

   (a) Warm up the engine.

   (b) When using the intelligent tester:
   (1) Connect the intelligent tester to the DLC3.
   (2) Select the following menu items: DIAGNOSIS / ENHANCED OBD II / DATA LIST / PRIMARY / IGN ADVANCE.
   (3) Inspect the ignition timing during idling.
   Ignition timing:
   7 to 24°CA BTDC during idling
   (Transmission in neutral position)
   (4) Check that the ignition timing advances immediately when the engine speed is increased.

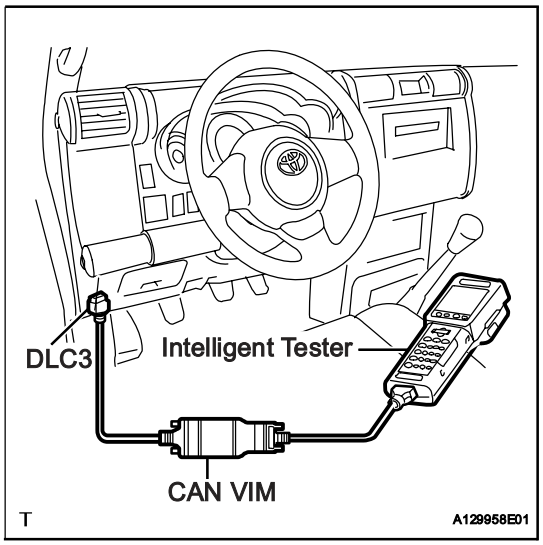

   (c) When not using intelligent tester:
   (1) Using SST, connect the terminals 13 (TC) and 4 (CG) of the DLC3.
   SST 09843-18040
   NOTICE:
   Do not connect the terminals incorrectly as it causes breakage of the engine.
   (2) Remove the air cleaner.

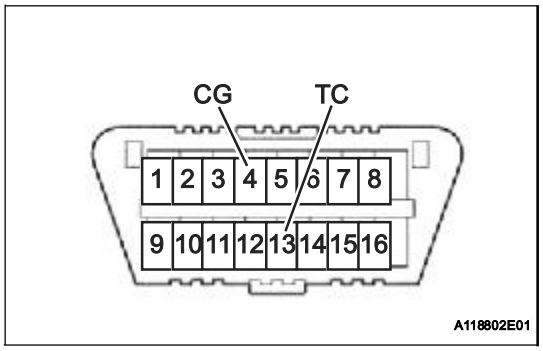

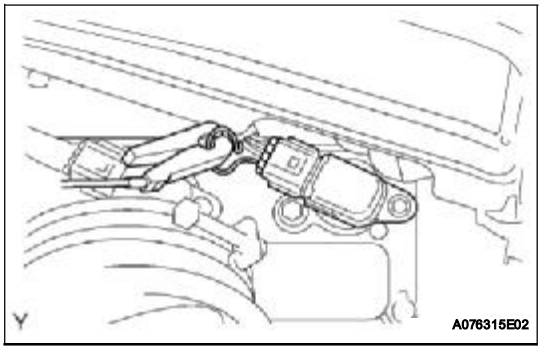

(3) Pull out the wire harness shown in the illustration.
(4) Connect the tester probe of a timing light to the wire of the ignition coil connector for the No. 1 cylinder.
NOTICE:
- **Use timing light that detects the first signal.**
- **After checking, wrap the wire harness with tape.**

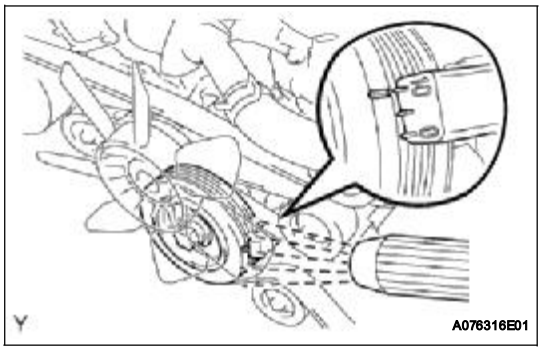

(5) Inspect the ignition timing during idling.
Ignition timing:
8 to 12°CA BTDC during idling (Transmission in neutral position)
(6) Remove SST from the DLC3.
(7) Inspect the ignition timing during idling.
Ignition timing:
7 to 24°CA BTDC during idling (Transmission in neutral position)
(8) Install the air cleaner.

8. INSPECT ENGINE IDLING SPEED
NOTICE:
- **Turn all the electrical systems OFF.**
- **Operate the inspection when the cooling fan motor is turned OFF.**

(a) Warm up the engine.

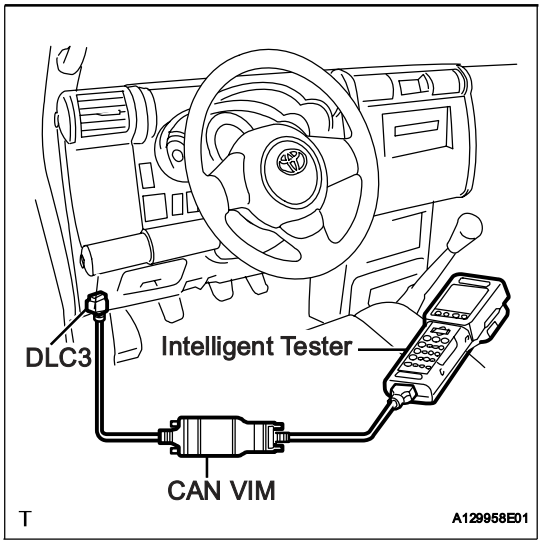

(b) When using the intelligent tester:
(1) Connect the intelligent tester to the DLC3.
(2) Select the following menu items: DIAGNOSIS / ENHANCED OBD II / DATA LIST / PRIMARY / ENGINE SPD.
(3) Inspect the engine idling speed.
Idling speed:
650 to 750 rpm (Transmission in neutral position)

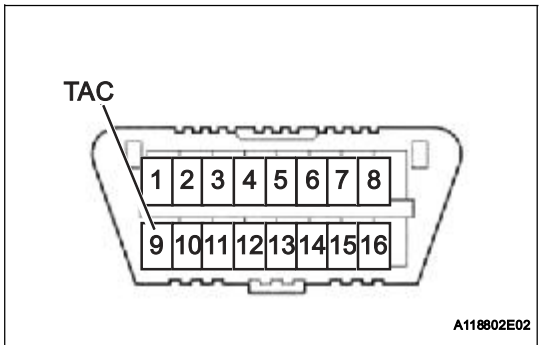

(c) When not using the intelligent tester:
(1) Using SST, connect the terminal 8 (TAC) of the DLC3.
SST 09843-18030
(2) Race the engine speed at 2,500 rpm for approximately 90 seconds.
(3) Inspect the engine idling speed.
Idling speed:
650 to 750 rpm (Transmission in neutral position)

9. INSPECT COMPRESSION

(a) Warm up and stop the engine.
(b) Remove the circuit opening relay (See page ES-443).
(c) Remove the V-bank cover (See page ES-414).
(d) Remove the air cleaner assembly (See page ES-429).
(e) Remove the throttle body bracket (See page FU-11).
(f) Remove the oil baffle plate (See page FU-11).
(g) Remove the No. 1 surge tank stay (See page FU-11).
(h) Remove the No. 2 surge tank stay (See page FU-12).
(i) Remove the ignition coils (See page IG-8).
(j) Remove the spark plugs.

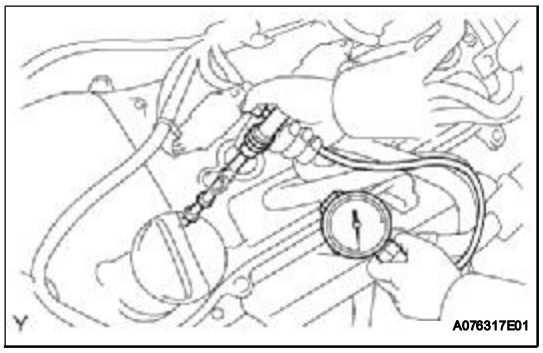

(k) Inspect the cylinder compression pressure.
(1) Insert a compression gauge into the spark plug hole. (*1)
SST 09992-00500
(2) Fully open the throttle. (*2)
(3) While cranking the engine, measure the compression pressure. (*3)
Compression pressure:
1,300 kPa (13.3 kgf/cm^2, 189 psi)
Minimum pressure:
1,000 kPa (10.2 kgf/cm^2, 145 psi)
Difference between cylinders:
100 kPa (1.0 kgf/cm^2, 15 psi)
NOTICE:
- **Use a fully-charged battery so the engine speed can be increased to 2,500 rpm or more.**
- **Inspect the other cylinders in the same way.**
- **Measure the compression in as short a time as possible.**

(4) If the cylinder compression is low, pour a small amount of engine oil into the cylinder through the spark plug hole and repeat steps (*1) through (*3) for cylinders with low compression.
- If adding oil increases the compression, the piston rings and/or cylinder bore may be worn or damaged.
- If the pressure stays low, a valve may be stuck or seated improperly, or there may be leakage from the gasket.

10. INSPECT CO/HC

(a) Start the engine.
(b) Run the engine at 2,500 rpm for approximately 180 seconds.
(c) Insert the CO/HC meter testing probe at least 40 cm (1.3 ft) into the tailpipe during idling.

(d) Immediately check the CO/HC concentration during idling and/or while running at 2,500 rpm.
HINT:
- Complete the measurement within 3 minutes.
- When carrying out the 2 mode (with the engine idling/running at 2,500 rpm) test, the measurement orders are prescribed by the applicable local regulations.

(e) If the CO/HC concentration does not comply with regulations, troubleshoot in the order given below.
(1) Check the heated oxygen sensor operation.

CO	HC	Problems	Causes
Normal	High	Rough idling	1. Faulty ignition: – Incorrect timing – Fouled, shorted or improperly gapped plugs 2. Incorrect valve clearance 3. Leaking intake and exhaust valves 4. Leaking cylinders
Low	High	Rough idling (Fluctuating HC reading)	1. Vacuum leaks: – PCV hoses – Intake manifold – Throttle body – IAC valve – Brake booster line 2. Lean mixture causing misfire
High	High	Rough idling (Black smoke from exhaust)	1. Restricted air filter 2. Plugged PCV valve 3. Faulty EFI systems: – Faulty pressure regulator – Faulty engine coolant temperature sensor – Faulty mass air flow meter – Faulty ECM – Faulty injectors – Faulty throttle position sensor

DRIVE BELT

COMPONENTS

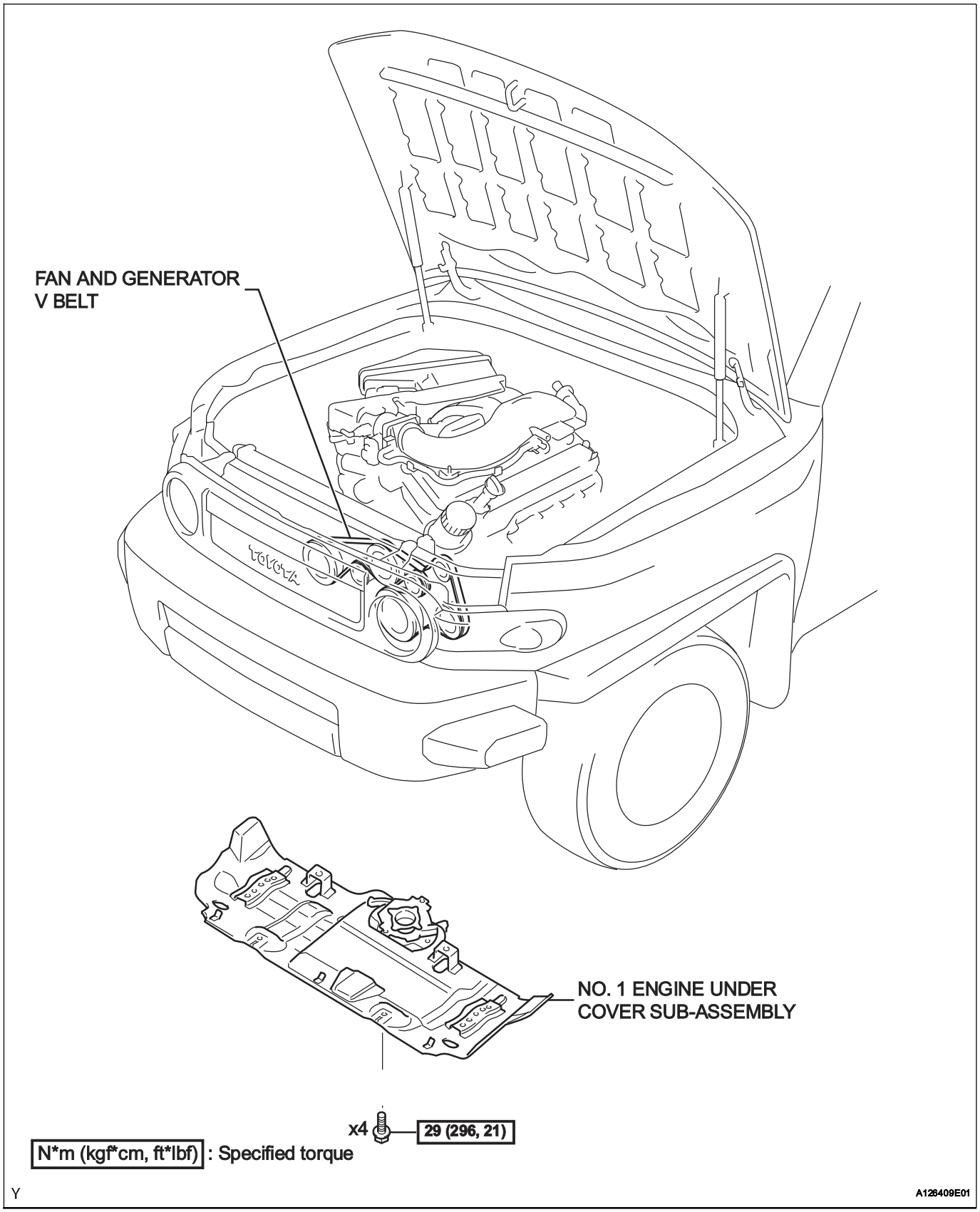

REMOVAL

1. REMOVE NO.1 ENGINE UNDER COVER SUB-ASSEMBLY

(a) Remove the 4 bolts, then remove the No. 1 engine under cover.

2. REMOVE FAN AND GENERATOR V BELT

(a) While releasing the belt tension by turning the belt tensioner counterclockwise, remove the V-ribbed belt from the belt tensioner.

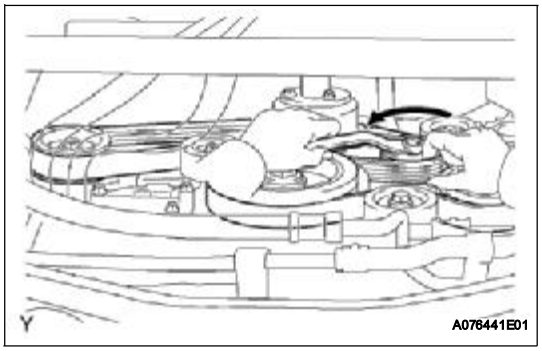

INSPECTION

1. INSPECT FAN AND GENERATOR V BELT

(a) Visually check the driver belt for excessive wear, frayed cords, etc. If any defect is found, replace the drive belt.

HINT:

Cracks on the rib side of the drive belt are considered acceptable. If the drive belt has chunks missing from the ribs, it should be replaced.

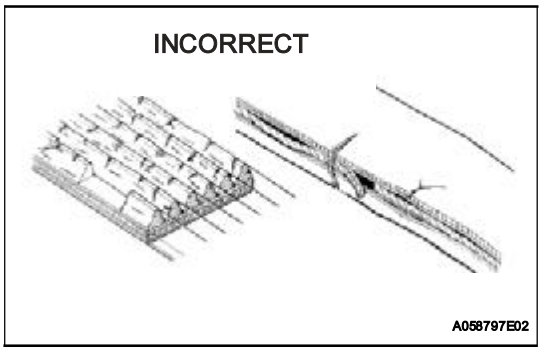

INSTALLATION

1. INSPECT V-RIBBED BELT TENSIONER ASSEMBLY

(a) Check that nothing gets caught in the tensioner by turning it clockwise and counterclockwise.
If a malfunction exists, replace the tensioner.

2. INSTALL FAN AND GENERATOR V BELT

(a) While turning the belt tensioner counterclockwise, align the holes as shown, and then insert a bar of 6 mm (0.24 in.) into the holes to fix the belt tensioner.

(b) Install the V-ribbed belt.

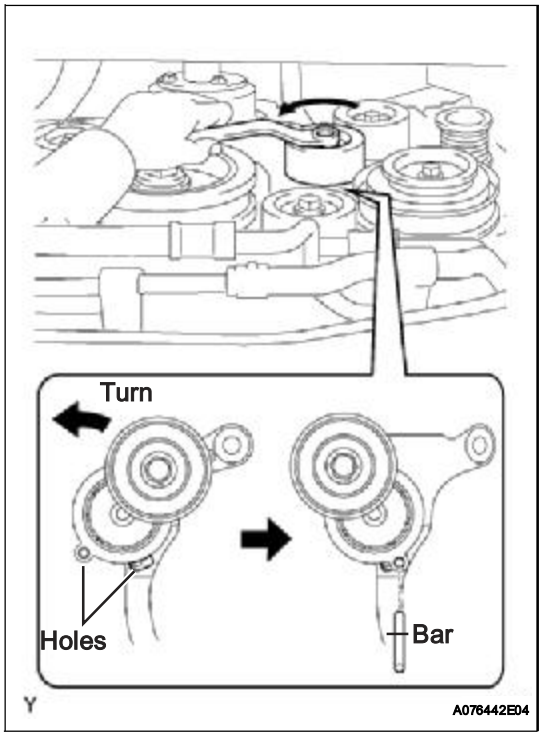

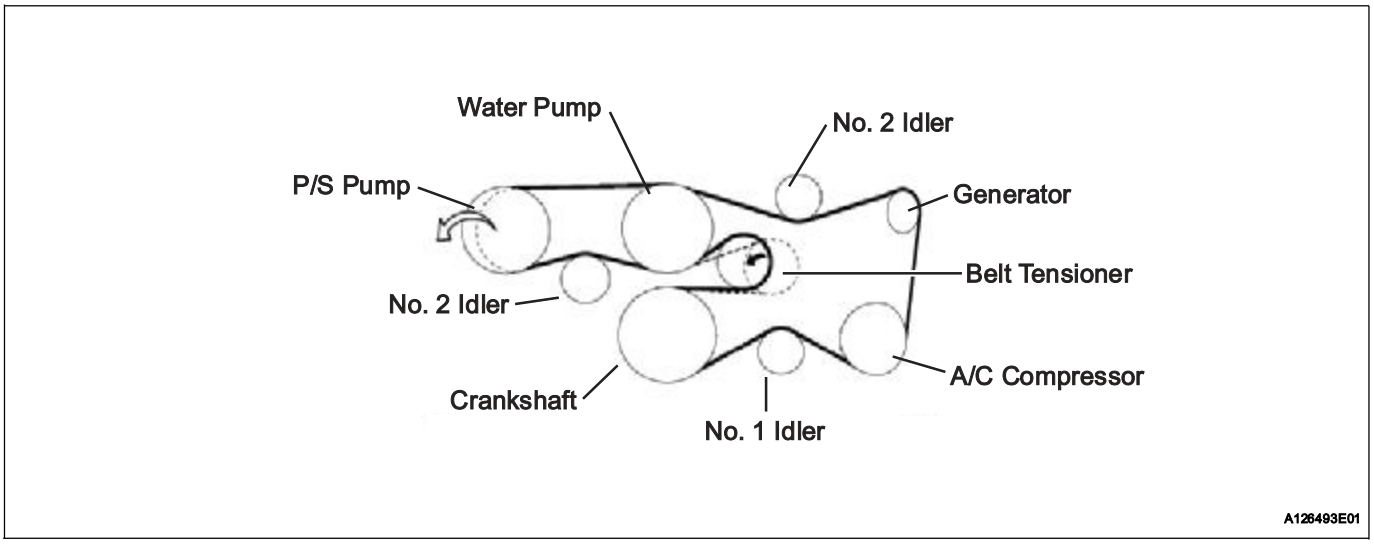

(c) While turning the belt tensioner counterclockwise, remove the bar.

(d) If it is hard to install the V-ribbed belt, perform the following procedure:

(1) Put the V-ribbed belt on all parts except the P/S pump, as shown in the illustration.

(2) While releasing the belt tension by turning the belt tensioner counterclockwise, put the V-ribbed belt on the P/S pump.

3. INSTALL NO. 1 ENGINE UNDER COVER SUB-ASSEMBLY

(a) Install the No. 1 engine under cover with the 4 bolts.
Torque: 29 N*m (296 kgf*cm, 21 ft.*lbf)

VALVE CLEARANCE

ADJUSTMENT

1. **DISCONNECT CABLE FROM NEGATIVE BATTERY TERMINAL**
2. **DRAIN ENGINE COOLANT (See page CO-3)**
3. **REMOVE V-BANK COVER (See page ES-428)**
4. **REMOVE AIR CLEANER ASSEMBLY (See page ES-429)**
5. **REMOVE THROTTLE BODY BRACKET (See page FU-11)**
6. **REMOVE OIL BAFFLE PLATE (See page FU-11)**
7. **REMOVE NO. 1 SURGE TANK STAY (See page FU-11)**
8. **REMOVE NO. 2 SURGE TANK STAY (See page FU-12)**
9. **REMOVE INTAKE AIR SURGE TANK (See page FU-12)**
10. **REMOVE IGNITION COIL ASSEMBLY (See page IG-8)**
11. **REMOVE CYLINDER HEAD COVER SUB-ASSEMBLY (See page EM-40)**
12. **REMOVE CYLINDER HEAD COVER SUB-ASSEMBLY LH (See page EM-40)**
13. **SET NO. 1 CYLINDER TO TDC/COMPRESSION**
    (a) Turn the crankshaft pulley until its groove and the "0" timing mark of the timing chain cover are aligned.

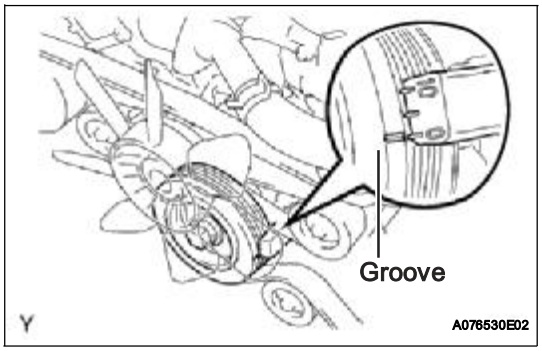

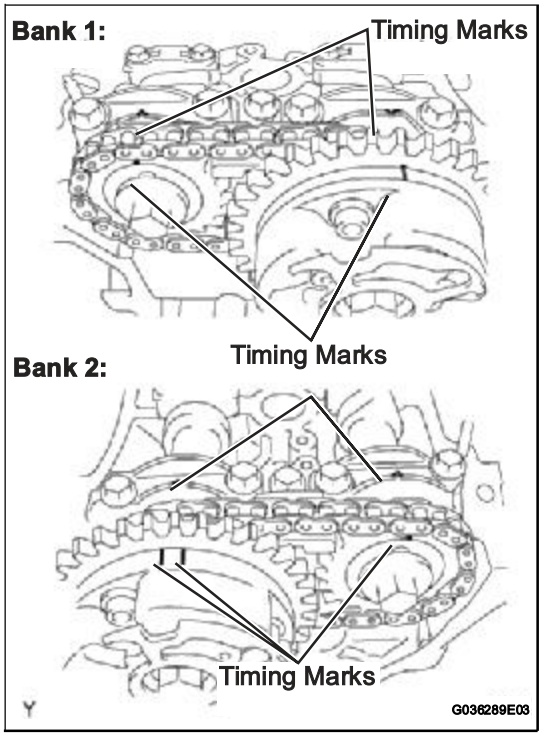

(b) Check that the timing marks of the camshaft timing gears are aligned with the timing marks of the bearing caps as shown in the illustration.
If not, turn the crankshaft 1 complete revolution (360°) and align the timing marks above.

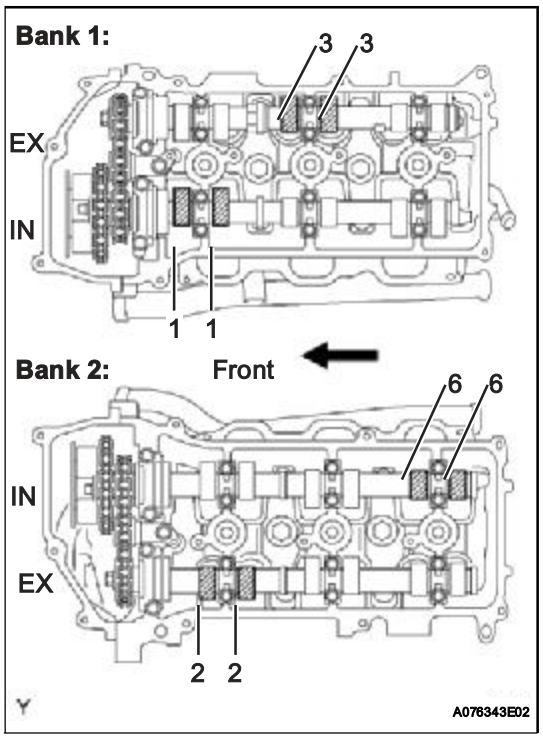

14. INSPECT VALVE CLEARANCE

(a) Check the valves indicated in the illustration.

(1) Using a feeler gauge, measure the clearance between the valve lifter and camshaft.
Valve clearance (Cold):
Intake 0.15 to 0.25 mm (0.006 to 0.010 in.)
Exhaust 0.29 to 0.39 mm (0.011 to 0.015 in.)

(2) Record any out-of-specification valve clearance measurements. They will be used later to determine the required replacement valve lifter.

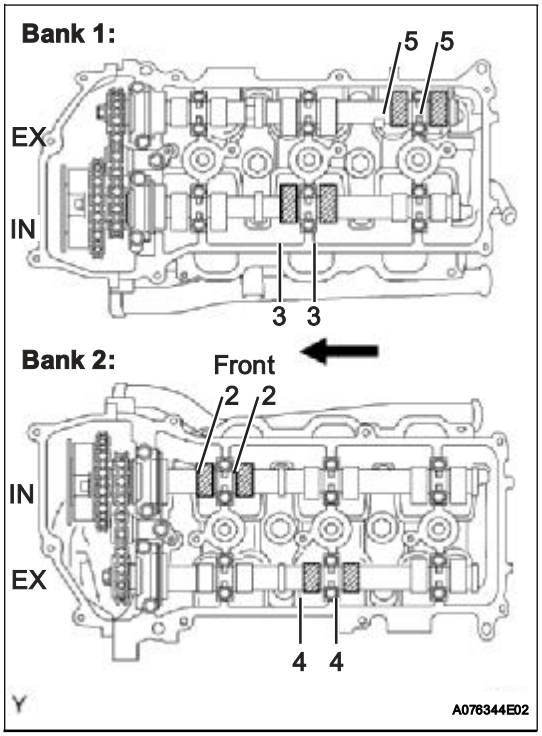

(b) Turn the crankshaft 240° clockwise, and check the valves indicated in the illustration.
  (1) Using a feeler gauge, measure the clearance between the valve lifter and camshaft.
  Valve clearance (Cold):
  Intake 0.15 to 0.25 mm (0.006 to 0.010 in.)
  Exhaust 0.29 to 0.39 mm (0.011 to 0.015 in.)
  (2) Record any out-of-specification valve clearance measurements. They will be used later to determine the required replacement valve lifter.

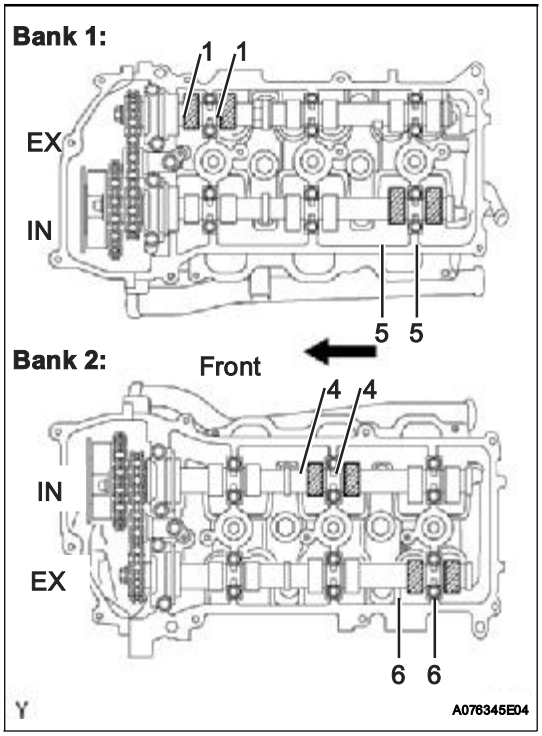

(c) Turn the crankshaft 240° clockwise, and check the valves indicated in the illustration.
  (1) Using a feeler gauge, measure the clearance between the valve lifter and camshaft.
  (2) Valve clearance (Cold):
  Intake 0.15 to 0.25 mm (0.006 to 0.010 in.)
  Exhaust 0.29 to 0.39 mm (0.011 to 0.015 in.)
  Record any out-of-specification valve clearance measurements. They will be used later to determine the required replacement valve lifter.

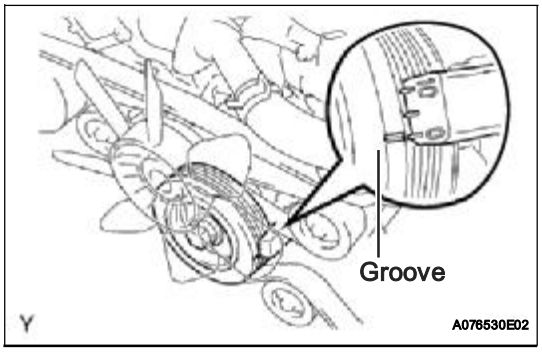

15. ADJUST VALVE CLEARANCE

(a) Set the No. 1 cylinder to TDC/compression.
  (1) Turn the crankshaft pulley until its groove and the "0" timing mark of the timing chain cover are aligned.

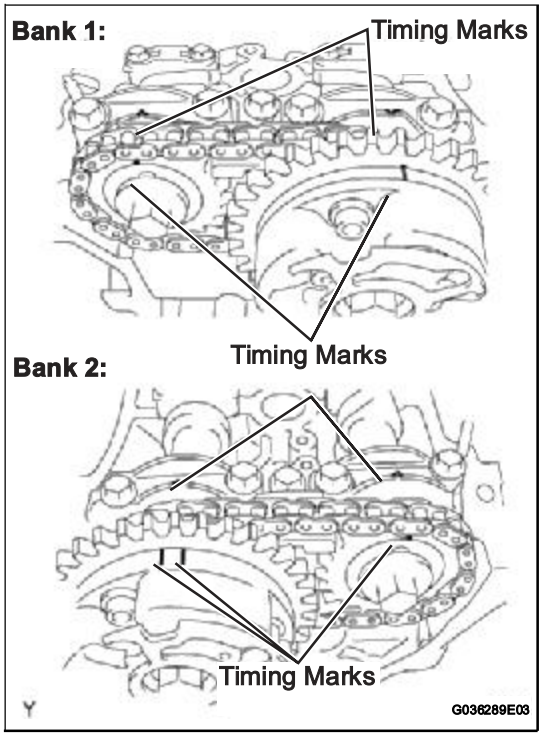

(2) Check that the timing marks of the camshaft timing gears are aligned with the timing marks of the bearing caps as shown in the illustration. If not, turn the crankshaft 1 complete revolution (360°) and align the timing marks as above.

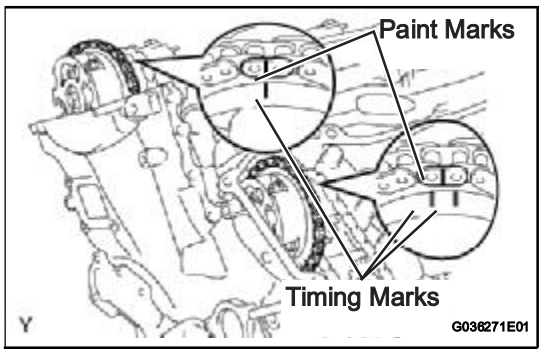

(3) Place paint marks on the No. 1 chain links corresponding to the timing marks of the camshaft timing gears.

(b) Remove the No. 1 chain tensioner assembly.
(c) Remove the No. 2 camshaft.
(d) Remove the No. 2 chain tensioner assembly.
(e) Remove the camshaft.
(f) Remove the No. 4 camshaft sub-assembly.
(g) Remove the No. 3 chain tensioner assembly.
(h) Remove the No. 3 camshaft sub-assembly.
(i) Remove the valve lifters.

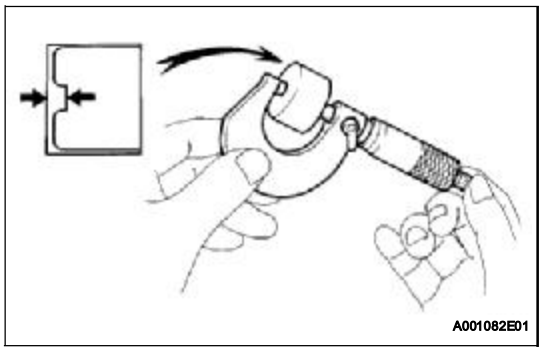

(j) Determine the replacement valve lifter size according to the following formulas and charts:
(1) Using a micrometer, measure the thickness of the removed lifter.
(2) Calculate the thickness of a new lifter so that the valve clearance comes within the specified value.

T:
Thickness of removed lifter
A:
Measured valve clearance
N:
Thickness of new lifter
Intake:
N = T + (A - 0.20 mm (0.008 in.))
Exhaust:
N = T + (A - 0.34 mm (0.013 in.))

(3) Select a new lifter with a thickness as close as possible to the calculated value.
HINT:
Lifters are available in 35 sizes in increments of 0.020 mm (0.0008 in.), from 5.060 mm (0.1992 in.) to 5.740 mm (0.2260 in.).

Valve Lifter Selection Chart (Intake)

Installed Lifter Thickness mm(in.) \ Measured Clearance mm(in.)																																						
5.060 (0.1992)									12	14	16	18	20	22	24	26	28	30	32	34	36	38	40	42	44	46	48	50	52	54	56	58	60	62	64	66	68	70	72
5.080 (0.2000)									14	16	18	20	22	24	26	28	30	32	34	36	38	40	42	44	46	48	50	52	54	56	58	60	62	64	66	68	70	72	
5.100 (0.2008)									16	18	20	22	24	26	28	30	32	34	36	38	40	42	44	46	48	50	52	54	56	58	60	62	64	66	68	70	72		
5.120 (0.2016)								6	18	20	22	24	26	28	30	32	34	36	38	40	42	44	46	48	50	52	54	56	58	60	62	64	66	68	70	72			
5.140 (0.2024)							8	8	20	22	24	26	28	30	32	34	36	38	40	42	44	46	48	50	52	54	56	58	60	62	64	66	68	70	72				
5.160 (0.2031)					8	10	10		22	24	26	28	30	32	34	36	38	40	42	44	46	48	50	52	54	56	58	60	62	64	66	68	70	72					
5.180 (0.2039)				8	10	12	12		24	26	28	30	32	34	36	38	40	42	44	46	48	50	52	54	56	58	60	62	64	66	68	70	72						
5.200 (0.2047)			8	10	12	14	14		26	28	30	32	34	36	38	40	42	44	46	48	50	52	54	56	58	60	62	64	66	68	70	72							
5.210 (0.2051)		6	8	10	12	14	16		28	30	32	34	36	38	40	42	44	46	48	50	52	54	56	58	60	62	64	66	68	70	72	74							
5.220 (0.2055)		8	10	12	14	16	16		28	30	32	34	36	38	40	42	44	46	48	50	52	54	56	58	60	62	64	66	68	70	72								
5.230 (0.2059)	6	8	10	12	14	16	18		30	32	34	36	38	40	42	44	46	48	50	52	54	56	58	60	62	64	66	68	70	72	74								
5.240 (0.2063)	8	10	12	14	16	18	18		30	32	34	36	38	40	42	44	46	48	50	52	54	56	58	60	62	64	66	68	70	72									
5.250 (0.2067)	6	8	10	12	14	16	18	20	32	34	36	38	40	42	44	46	48	50	52	54	56	58	60	62	64	66	68	70	72	74									
5.260 (0.2071)	8	10	12	14	16	18	20	20	32	34	36	38	40	42	44	46	48	50	52	54	56	58	60	62	64	66	68	70	72										
5.270 (0.2075)	8	10	12	14	16	18	20	22	34	36	38	40	42	44	46	48	50	52	54	56	58	60	62	64	66	68	70	72	74										
5.280 (0.2079)	10	12	14	16	18	20	22	22	34	36	38	40	42	44	46	48	50	52	54	56	58	60	62	64	66	68	70	72											
5.290 (0.2083)	10	12	14	16	18	20	22	24	36	38	40	42	44	46	48	50	52	54	56	58	60	62	64	66	68	70	72	74											
5.300 (0.2087)	12	14	16	18	20	22	24	24	36	38	40	42	44	46	48	50	52	54	56	58	60	62	64	66	68	70	72												
5.310 (0.2091)	12	14	16	18	20	22	24	26	38	40	42	44	46	48	50	52	54	56	58	60	62	64	66	68	70	72	74												
5.320 (0.2094)	14	16	18	20	22	24	26	26	38	40	42	44	46	48	50	52	54	56	58	60	62	64	66	68	70	72													
5.330 (0.2098)	14	16	18	20	22	24	26	28	40	42	44	46	48	50	52	54	56	58	60	62	64	66	68	70	72	74													
5.340 (0.2102)	16	18	20	22	24	26	28	28	40	42	44	46	48	50	52	54	56	58	60	62	64	66	68	70	72														
5.350 (0.2106)	16	18	20	22	24	26	28	30	42	44	46	48	50	52	54	56	58	60	62	64	66	68	70	72	74														
5.360 (0.2110)	18	20	22	24	26	28	30	30	42	44	46	48	50	52	54	56	58	60	62	64	66	68	70	72															
5.370 (0.2114)	18	20	22	24	26	28	30	32	44	46	48	50	52	54	56	58	60	62	64	66	68	70	72	74															
5.380 (0.2118)	20	22	24	26	28	30	32	32	44	46	48	50	52	54	56	58	60	62	64	66	68	70	72																
5.390 (0.2122)	20	22	24	26	28	30	32	34	46	48	50	52	54	56	58	60	62	64	66	68	70	72	74																
5.400 (0.2126)	22	24	26	28	30	32	34	34	46	48	50	52	54	56	58	60	62	64	66	68	70	72																	
5.410 (0.2130)	22	24	26	28	30	32	34	36	48	50	52	54	56	58	60	62	64	66	68	70	72	74																	
5.420 (0.2134)	24	26	28	30	32	34	36	36	48	50	52	54	56	58	60	62	64	66	68	70	72																		
5.430 (0.2138)	24	26	28	30	32	34	36	38	50	52	54	56	58	60	62	64	66	68	70	72	74																		
5.440 (0.2142)	26	28	30	32	34	36	38	38	50	52	54	56	58	60	62	64	66	68	70	72																			
5.450 (0.2146)	26	28	30	32	34	36	38	40	52	54	56	58	60	62	64	66	68	70	72	74																			
5.460 (0.2150)	28	30	32	34	36	38	40	40	52	54	56	58	60	62	64	66	68	70	72																				
5.470 (0.2154)	28	30	32	34	36	38	40	42	54	56	58	60	62	64	66	68	70	72	74																				
5.480 (0.2157)	30	32	34	36	38	40	42	42	54	56	58	60	62	64	66	68	70	72																					
5.490 (0.2161)	30	32	34	36	38	40	42	44	56	58	60	62	64	66	68	70	72	74																					
5.500 (0.2165)	32	34	36	38	40	42	44	44	56	58	60	62	64	66	68	70	72																						
5.510 (0.2169)	32	34	36	38	40	42	44	46	58	60	62	64	66	68	70	72	74																						
5.520 (0.2173)	34	36	38	40	42	44	46	46	58	60	62	64	66	68	70	72																							
5.530 (0.2177)	34	36	38	40	42	44	46	48	60	62	64	66	68	70	72	74																							
5.540 (0.2181)	36	38	40	42	44	46	48	48	60	62	64	66	68	70	72																								
5.550 (0.2185)	36	38	40	42	44	46	48	50	62	64	66	68	70	72	74																								
5.560 (0.2189)	38	40	42	44	46	48	50	50	62	64	66	68	70	72																									
5.580 (0.2197)	40	42	44	46	48	50	52	52	64	66	68	70	72																										
5.600 (0.2205)	42	44	46	48	50	52	54	54	66	68	70	72																											
5.620 (0.2213)	44	46	48	50	52	54	56	56	68	70	72																												
5.640 (0.2220)	46	48	50	52	54	56	58	58	70	72																													
5.660 (0.2228)	48	50	52	54	56	58	60	60	72																														
5.680 (0.2236)	50	52	54	56	58	60	62	62																															
5.700 (0.2244)	52	54	56	58	60	62	64	64																															
5.720 (0.2252)	54	56	58	60	62	64	66	66																															
5.740 (0.2260)	56	58	60	62	64	66	68	68																															

Y

A126377E01

EM

Valve Lifter Selection Chart (Exhaust)

Installed Lifter Thickness mm(in.) \ Measured Clearance mm(in.)																																																	
5.060 (0.1992)																12	14	16	18	20	22	24	56	28	30	32	34	36	38	40	42	44	46	48	50	52	54	56	58	60	62	64	66	68	70	72
5.080 (0.2000)																14	16	18	20	22	24	56	28	30	32	34	36	38	40	42	44	46	48	50	52	54	56	58	60	62	64	66	68	70	72	
5.100 (0.2008)																16	18	20	22	24	56	28	30	32	34	36	38	40	42	44	46	48	50	52	54	56	58	60	62	64	66	68	70	72		
5.120 (0.2016)														6		18	20	22	24	56	28	30	32	34	36	38	40	42	44	46	48	50	52	54	56	58	60	62	64	66	68	70	72			
5.140 (0.2024)													8	8		20	22	24	56	28	30	32	34	36	38	40	42	44	46	48	50	52	54	56	58	60	62	64	66	68	70	72				
5.160 (0.2031)												8	10	10		22	24	56	28	30	32	34	36	38	40	42	44	46	48	50	52	54	56	58	60	62	64	66	68	70	72					
5.180 (0.2039)											8	10	12	12		24	56	28	30	32	34	36	38	40	42	44	46	48	50	52	54	56	58	60	62	64	66	68	70	72						
5.200 (0.2047)										8	10	12	14	14		56	28	30	32	34	36	38	40	42	44	46	48	50	52	54	56	58	60	62	64	66	68	70	72							
5.210 (0.2051)									6	8	10	12	14	16		28	30	32	34	36	38	40	42	44	46	48	50	52	54	56	58	60	62	64	66	68	70	72	74							
5.220 (0.2055)									8	10	12	14	16	16		28	30	32	34	36	38	40	42	44	46	48	50	52	54	56	58	60	62	64	66	68	70	72								
5.230 (0.2059)								6	8	10	12	14	16	18		30	32	34	36	38	40	42	44	46	48	50	52	54	56	58	60	62	64	66	68	70	72	74								
5.240 (0.2063)								8	10	12	14	16	18	18		30	32	34	36	38	40	42	44	46	48	50	52	54	56	58	60	62	64	66	68	70	72									
5.250 (0.2067)							6	8	10	12	14	16	18	20		32	34	36	38	40	42	44	46	48	50	52	54	56	58	60	62	64	66	68	70	72	74									
5.260 (0.2071)							8	10	12	14	16	18	20	20		32	34	36	38	40	42	44	46	48	50	52	54	56	58	60	62	64	66	68	70	72										
5.270 (0.2075)						6	8	10	12	14	16	18	20	22		34	36	38	40	42	44	46	48	50	52	54	56	58	60	62	64	66	68	70	72	74										
5.280 (0.2079)						8	10	12	14	16	18	20	22	22		34	36	38	40	42	44	46	48	50	52	54	56	58	60	62	64	66	68	70	72											
5.290 (0.2083)					6	8	10	12	14	16	18	20	22	24		36	38	40	42	44	46	48	50	52	54	56	58	60	62	64	66	68	70	72	74											
5.300 (0.2087)					8	10	12	14	16	18	20	22	24	24		36	38	40	42	44	46	48	50	52	54	56	58	60	62	64	66	68	70	72												
5.310 (0.2091)				6	8	10	12	14	16	18	20	22	24	26		38	40	42	44	46	48	50	52	54	56	58	60	62	64	66	68	70	72	74												
5.320 (0.2094)				8	10	12	14	16	18	20	22	24	26	26		38	40	42	44	46	48	50	52	54	56	58	60	62	64	66	68	70	72													
5.330 (0.2098)			6	8	10	12	14	16	18	20	22	24	56	28		40	42	44	46	48	50	52	54	56	58	60	62	64	66	68	70	72	74													
5.340 (0.2102)			8	10	12	14	16	18	20	22	24	26	28	28		40	42	44	46	48	50	52	54	56	58	60	62	64	66	68	70	72														
5.350 (0.2106)		6	8	10	12	14	16	18	20	22	24	56	28	30		42	44	46	48	50	52	54	56	58	60	62	64	66	68	70	72	74														
5.360 (0.2110)		8	10	12	14	16	18	20	22	24	26	28	30	30		42	44	46	48	50	52	54	56	58	60	62	64	66	68	70	72															
5.370 (0.2114)	6	8	10	12	14	16	18	20	22	24	56	28	30	32		44	46	48	50	52	54	56	58	60	62	64	66	68	70	72	74															
5.380 (0.2118)	8	10	12	14	16	18	20	22	24	26	28	30	32	32		44	46	48	50	52	54	56	58	60	62	64	66	68	70	72																
5.390 (0.2122)	6	8	10	12	14	16	18	20	22	24	56	28	30	32	34	46	48	50	52	54	56	58	60	62	64	66	68	70	72	74																
5.400 (0.2126)	8	10	12	14	16	18	20	22	24	26	28	30	32	34	34	46	48	50	52	54	56	58	60	62	64	66	68	70	72																	
5.410 (0.2130)	8	10	12	14	16	18	20	22	24	56	28	30	32	34	36	48	50	52	54	56	58	60	62	64	66	68	70	72	74																	
5.420 (0.2134)	10	12	14	16	18	20	22	24	26	28	30	32	34	36	36	48	50	52	54	56	58	60	62	64	66	68	70	72																		
5.430 (0.2138)	10	12	14	16	18	20	22	24	56	28	30	32	34	36	38	50	52	54	56	58	60	62	64	66	68	70	72	74																		
5.440 (0.2142)	12	14	16	18	20	22	24	26	28	30	32	34	36	38	38	50	52	54	56	58	60	62	64	66	68	70	72																			
5.450 (0.2146)	12	14	16	18	20	22	24	56	28	30	32	34	36	38	40	52	54	56	58	60	62	64	66	68	70	72	74																			
5.460 (0.2150)	14	16	18	20	22	24	26	28	30	32	34	36	38	40	40	52	54	56	58	60	62	64	66	68	70	72																				
5.470 (0.2154)	14	16	18	20	22	24	56	28	30	32	34	36	38	40	42	54	56	58	60	62	64	66	68	70	72	74																				
5.480 (0.2157)	16	18	20	22	24	26	28	30	32	34	36	38	40	42	42	54	56	58	60	62	64	66	68	70	72																					
5.490 (0.2161)	16	18	20	22	24	56	28	30	32	34	36	38	40	42	44	56	58	60	62	64	66	68	70	72	74																					
5.500 (0.2165)	18	20	22	24	26	28	30	32	34	36	38	40	42	44	44	56	58	60	62	64	66	68	70	72																						
5.510 (0.2169)	18	20	22	24	56	28	30	32	34	36	38	40	42	44	46	58	60	62	64	66	68	70	72	74																						
5.520 (0.2173)	20	22	24	26	28	30	32	34	36	38	40	42	44	46	46	58	60	62	64	66	68	70	72																							
5.530 (0.2177)	20	22	24	56	28	30	32	34	36	38	40	42	44	46	48	60	62	64	66	68	70	72	74																							
5.540 (0.2181)	22	24	26	28	30	32	34	36	38	40	42	44	46	48	48	60	62	64	66	68	70	72																								
5.550 (0.2185)	22	24	56	28	30	32	34	36	38	40	42	44	46	48	50	62	64	66	68	70	72	74																								
5.560 (0.2189)	24	26	28	30	32	34	36	38	40	42	44	46	48	50	50	62	64	66	68	70	72																									
5.580 (0.2197)	26	28	30	32	34	36	38	40	42	44	46	48	50	52	52	64	66	68	70	72																										
5.600 (0.2205)	28	30	32	34	36	38	40	42	44	46	48	50	52	54	54	66	68	70	72																											
5.620 (0.2213)	30	32	34	36	38	40	42	44	46	48	50	52	54	56	56	68	70	72																												
5.640 (0.2220)	32	34	36	38	40	42	44	46	48	50	52	54	56	58	58	70	72																													
5.660 (0.2228)	34	36	38	40	42	44	46	48	50	52	54	56	58	60	60	72																														
5.680 (0.2236)	36	38	40	42	44	46	48	50	52	54	56	58	60	62	62																															
5.700 (0.2244)	38	40	42	44	46	48	50	52	54	56	58	60	62	64	64																															
5.720 (0.2252)	40	42	44	46	48	50	52	54	56	58	60	62	64	66	66																															
5.740 (0.2260)	42	44	46	48	50	52	54	56	58	60	62	64	66	68	68																															

Y

A126378E01

HINT:
New lifter thickness [mm (in.)]

Lifter No.	Thickness	Lifter No.	Thickness	Lifter No.	Thickness
06	5.060 (0.1992)	30	5.300 (0.2087)	54	5.540 (0.2181)
08	5.080 (0.2000)	32	5.320 (0.2094)	56	5.560 (0.2189)
10	5.100 (0.2008)	34	5.340 (0.2102)	58	5.580 (0.2197)
12	5.120 (0.2016)	36	5.360 (0.2110)	60	5.600 (0.2205)
14	5.140 (0.2024)	38	5.380 (0.2118)	62	5.620 (0.2213)
16	5.160 (0.2031)	40	5.400 (0.2126)	64	5.640 (0.2220)
18	5.180 (0.2039)	42	5.420 (0.2134)	66	5.660 (0.2228)
20	5.200 (0.2047)	44	5.440 (0.2142)	68	5.680 (0.2236)
22	5.220 (0.2055)	46	5.460 (0.2150)	70	5.700 (0.2244)
24	5.240 (0.2063)	48	5.480 (0.2157)	72	5.720 (0.2252)
26	5.260 (0.2071)	50	5.500 (0.2165)	74	5.740 (0.2260)
28	5.280 (0.2079)	52	5.520 (0.2173)		

(k) Install the No. 3 camshaft sub-assembly.
(l) Install the No. 3 chain tensioner assembly.
(m) Install the No. 4 camshaft sub-assembly.
(n) Install the camshaft.
(o) Install the No. 2 chain tensioner assembly.
(p) Install the No. 2 camshaft.
(q) Install the No. 1 chain tensioner assembly.
(1) Check that the timing marks of the camshaft timing gears are aligned with the timing marks of the bearing cap as shown in the illustration.

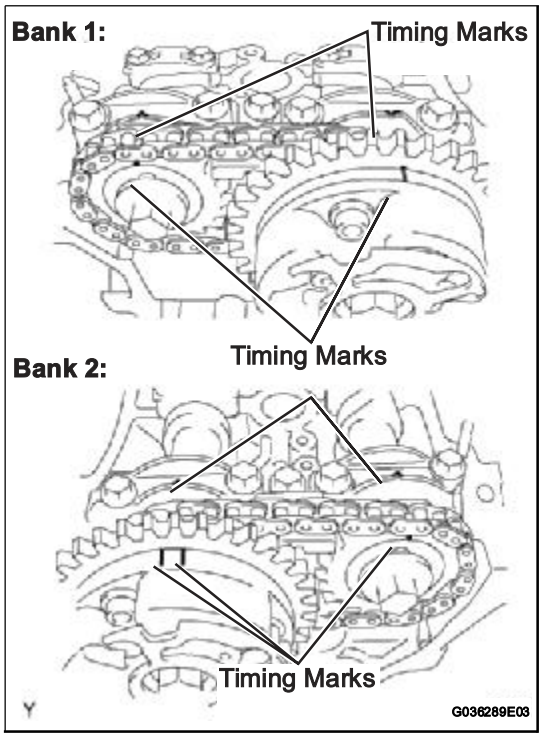

16. INSTALL CYLINDER HEAD COVER SUB-ASSEMBLY LH (See page EM-57)

17. INSTALL CYLINDER HEAD COVER SUB-ASSEMBLY (See page EM-58)

18. INSTALL IGNITION COIL ASSEMBLY (See page IG-8)

19. INSTALL INTAKE AIR SURGE TANK (See page FU-17)

20. INSTALL NO. 2 SURGE TANK STAY (See page FU-19)

21. INSTALL NO. 1 SURGE TANK STAY (See page FU-19)

22. INSTALL OIL BAFFLE PLATE (See page FU-19)

23. INSTALL THROTTLE BODY BRACKET (See page FU-19)

24. INSTALL AIR CLEANER ASSEMBLY (See page ES-431)

25. ADD ENGINE COOLANT (See page CO-3)

26. CONNECT CABLE TO NEGATIVE BATTERY TERMINAL
Torque: 3.9 N*m (40 kgf*cm, 35 in.*lbf)

27. CHECK FOR ENGINE COOLANT LEAKAGE (See page CO-4)

28. **INSPECT IGNITION TIMING (See page EM-1)**
29. **INSTALL V-BANK COVER (See page ES-431)**

TIMING CHAIN

COMPONENTS

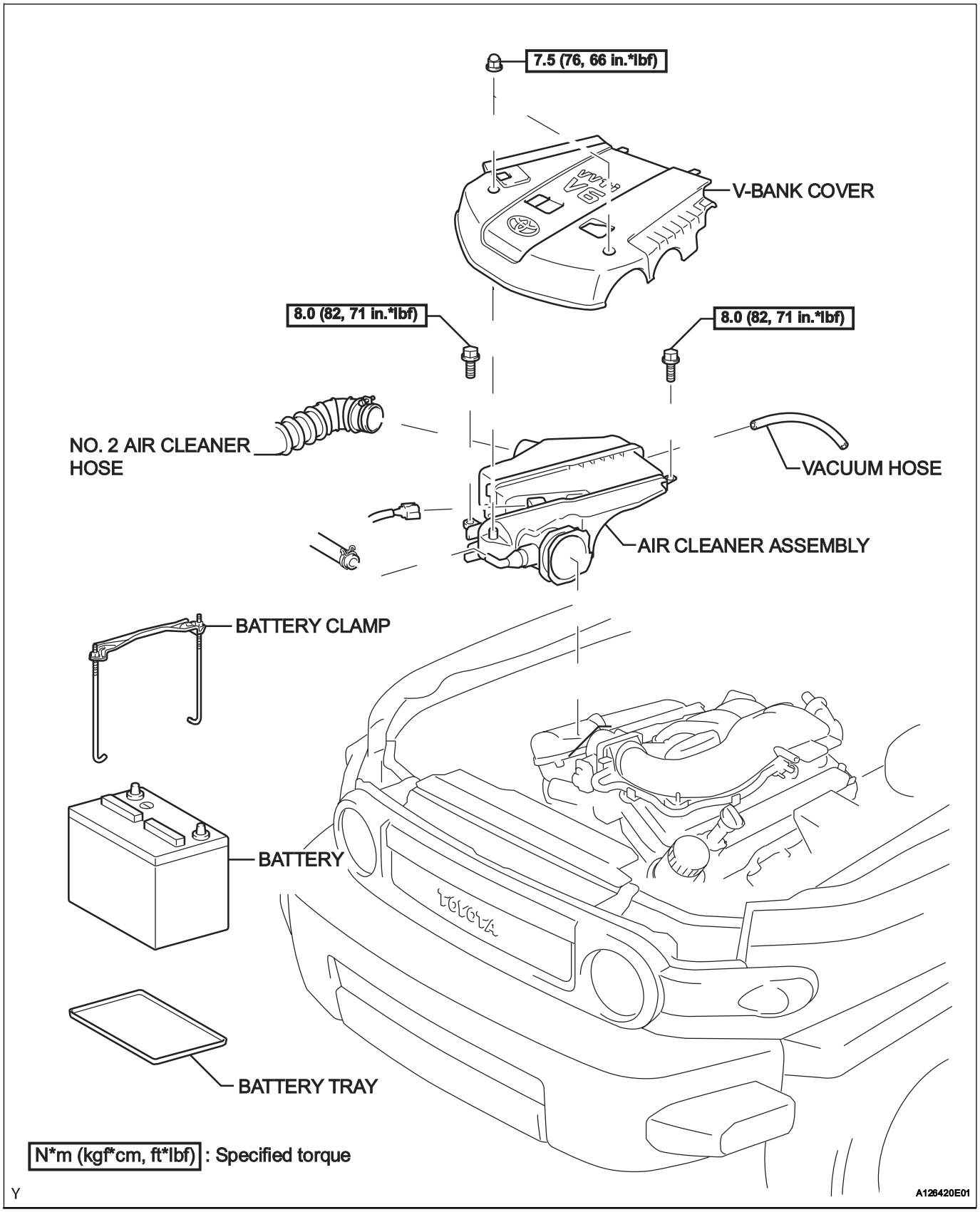

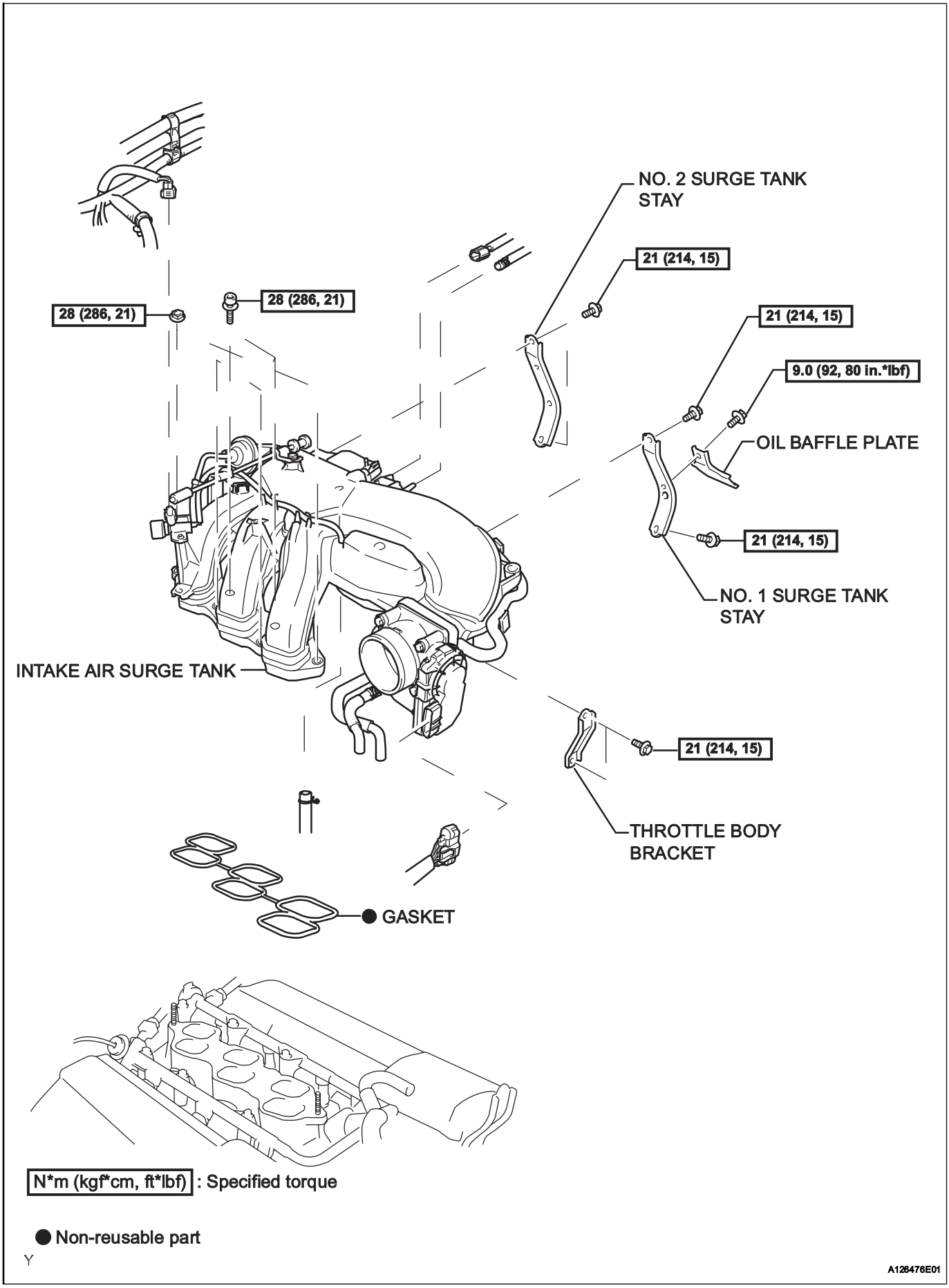
NO. 2 SURGE TANK STAY
21 (214, 15)
28 (286, 21)
28 (286, 21)
21 (214, 15)
9.0 (92, 80 in.*lbf)
OIL BAFFLE PLATE
21 (214, 15)
NO. 1 SURGE TANK STAY
INTAKE AIR SURGE TANK
21 (214, 15)
THROTTLE BODY BRACKET
GASKET
N*m (kgf*cm, ft*lbf) : Specified torque
Non-reusable part
A126476E01

Y

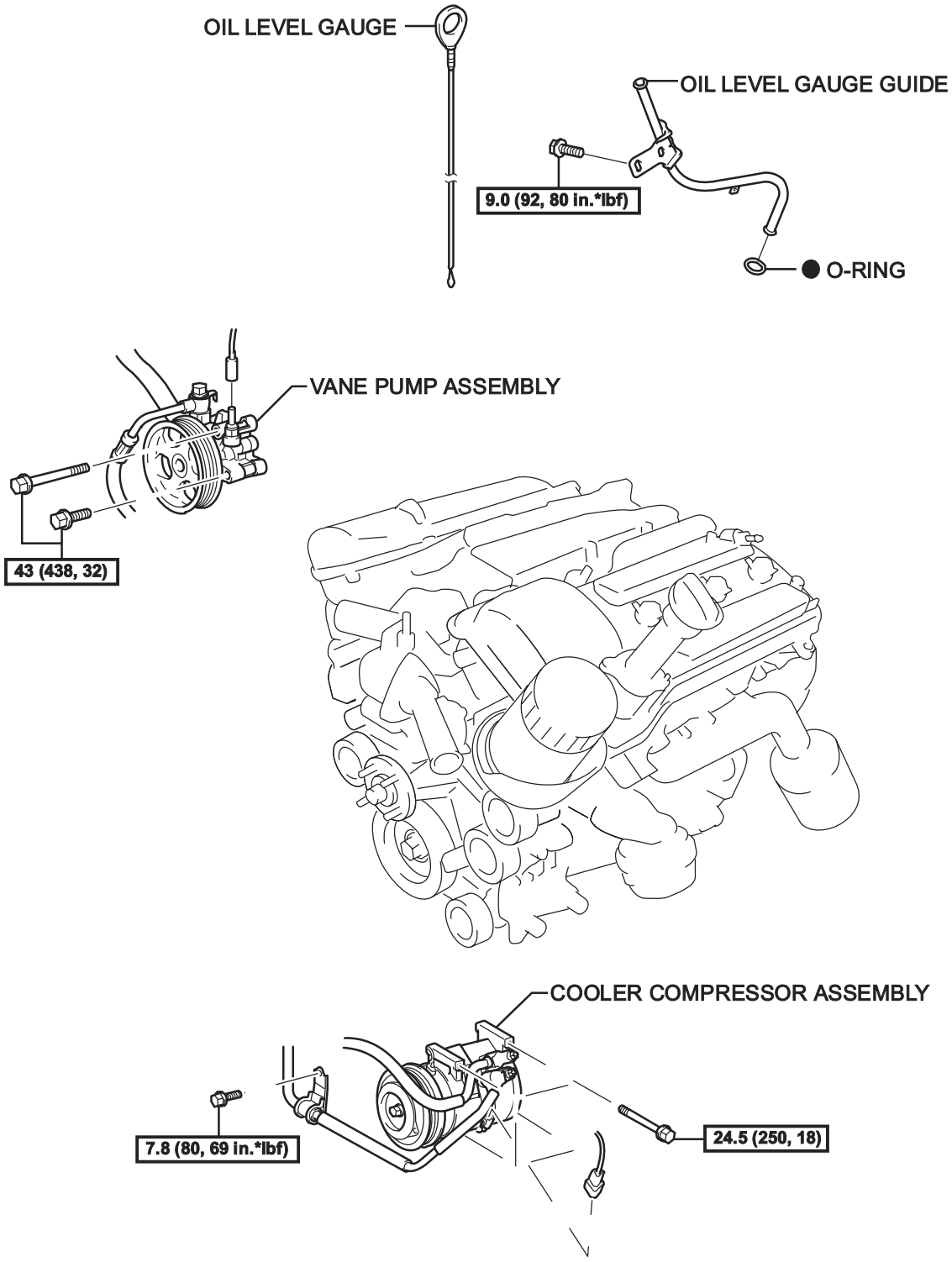

N*m (kgf*cm, ft*lbf) : Specified torque

● Non-reusable part

Y

A128421E01

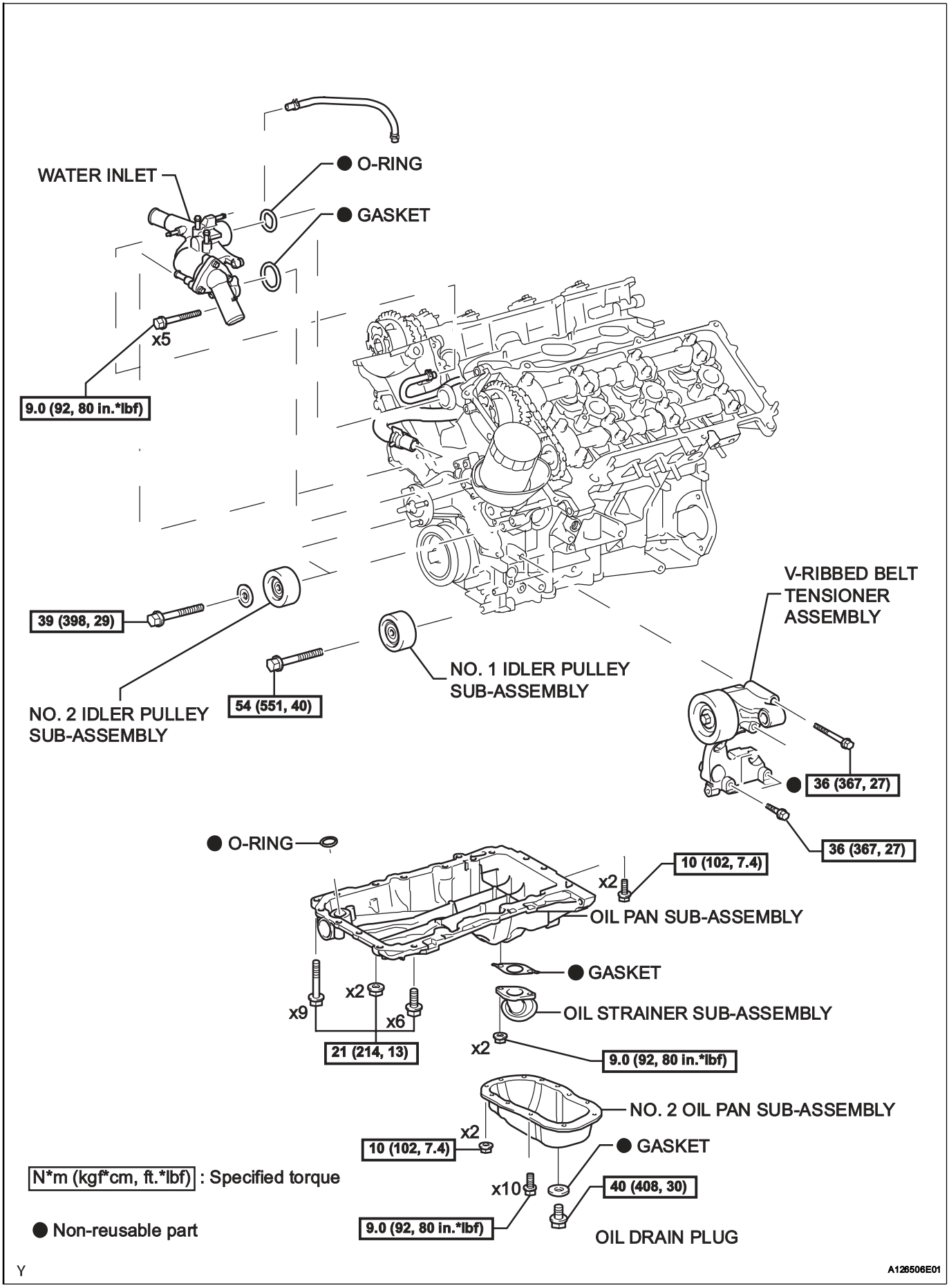
WATER INLET
● O-RING
● GASKET
x5
9.0 (92, 80 in.*lbf)
39 (398, 29)
NO. 2 IDLER PULLEY SUB-ASSEMBLY
54 (551, 40)
NO. 1 IDLER PULLEY SUB-ASSEMBLY
V-RIBBED BELT TENSIONER ASSEMBLY
● 36 (367, 27)
36 (367, 27)
● O-RING
x2
10 (102, 7.4)
OIL PAN SUB-ASSEMBLY
● GASKET
x9
x2
x6
21 (214, 13)
OIL STRAINER SUB-ASSEMBLY
x2
9.0 (92, 80 in.*lbf)
NO. 2 OIL PAN SUB-ASSEMBLY
x2
10 (102, 7.4)
● GASKET
x10
40 (408, 30)
9.0 (92, 80 in.*lbf)
OIL DRAIN PLUG
N*m (kgf*cm, ft.*lbf) : Specified torque
● Non-reusable part
Y
A126506E01

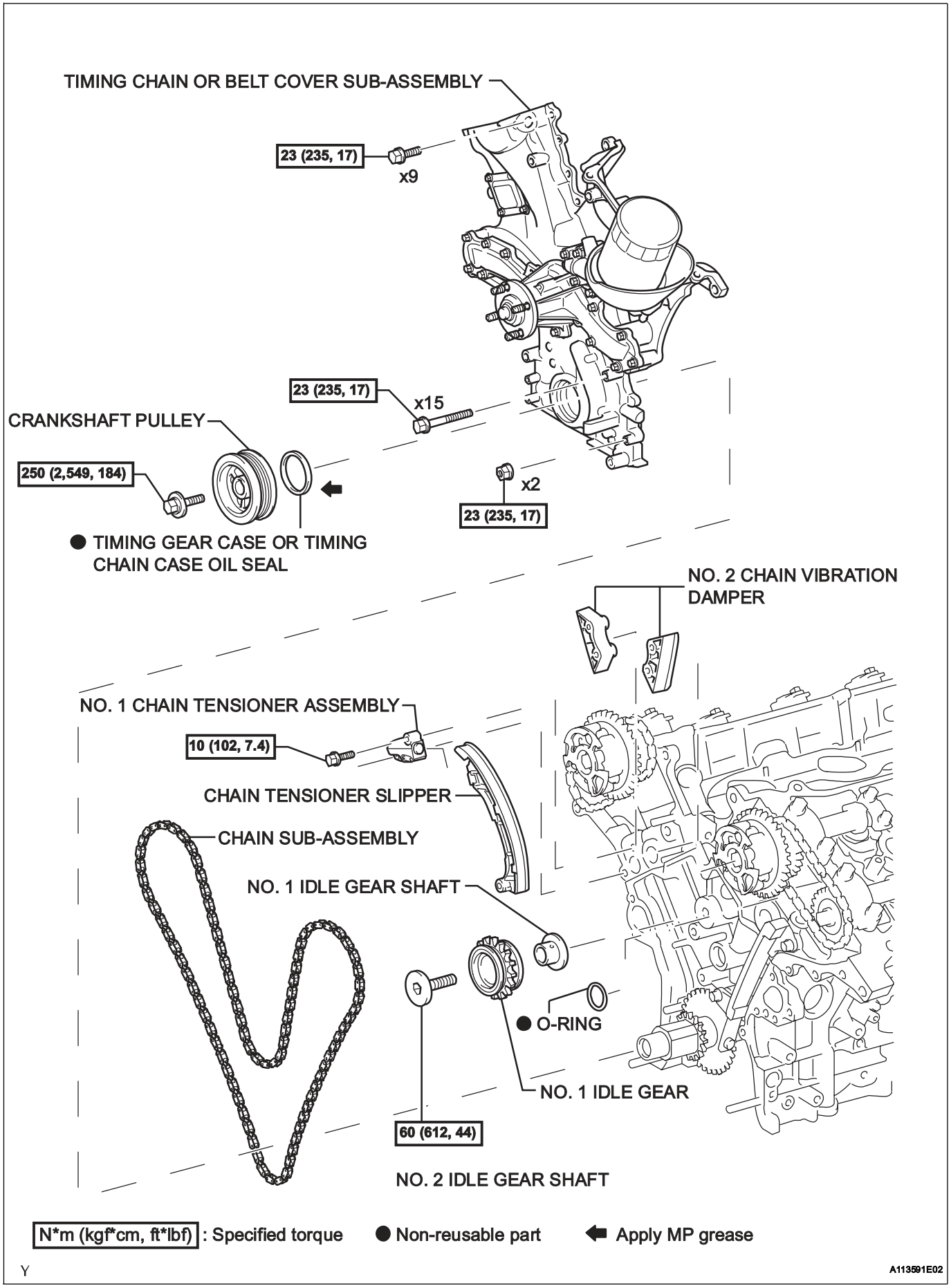
TIMING CHAIN OR BELT COVER SUB-ASSEMBLY
23 (235, 17)
x9
23 (235, 17)
x15
CRANKSHAFT PULLEY
250 (2,549, 184)
x2
23 (235, 17)
● TIMING GEAR CASE OR TIMING CHAIN CASE OIL SEAL
NO. 2 CHAIN VIBRATION DAMPER
NO. 1 CHAIN TENSIONER ASSEMBLY
10 (102, 7.4)
CHAIN TENSIONER SLIPPER
CHAIN SUB-ASSEMBLY
NO. 1 IDLE GEAR SHAFT
● O-RING
NO. 1 IDLE GEAR
60 (612, 44)
NO. 2 IDLE GEAR SHAFT
N*m (kgf*cm, ft*lbf) : Specified torque
● Non-reusable part
Apply MP grease
Y
A113591E02

REMOVAL

1. **REMOVE BATTERY**
2. **DRAIN ENGINE COOLANT (See page CO-3)**
3. **DRAIN ENGINE OIL (See page LU-4)**
4. **REMOVE POWER STEERING LINK ASSEMBLY (for 2WD)**
   Refer to the procedures up to "REMOVE POWER STEERING LINK ASSEMBLY" (See page PS-18).
5. **REMOVE POWER STEERING LINK ASSEMBLY (for 4WD)**
   Refer to the procedures up to "REMOVE POWER STEERING LINK ASSEMBLY" (See page PS-37).
6. **REMOVE FRONT DIFFERENTIAL CARRIER ASSEMBLY (for 4WD)**
   Refer to the procedures up to "REMOVE FRONT DIFFERENTIAL CARRIER ASSEMBLY" (See page DF-20).
7. **REMOVE FAN**
   Refer to the procedures up to "REMOVE FAN PULLEY" (See page CO-17).
8. **REMOVE GENERATOR ASSEMBLY**
   Refer to the procedures up to "REMOVE GENERATOR ASSEMBLY" (See page CH-9)
9. **SEPARATE COOLER COMPRESSOR ASSEMBLY (See page ES-420)**
10. **REMOVE V-RIBBED BELT TENSIONER ASSEMBLY**
    (a) Remove the 5 bolts, then remove the V-ribbed belt tensioner.
11. **REMOVE OIL LEVEL GAUGE GUIDE**
    (a) Remove the oil level gauge.
    (b) Remove the bolt and pull out the oil level gauge guide.
    (c) Remove the O-ring from the oil level gauge guide.

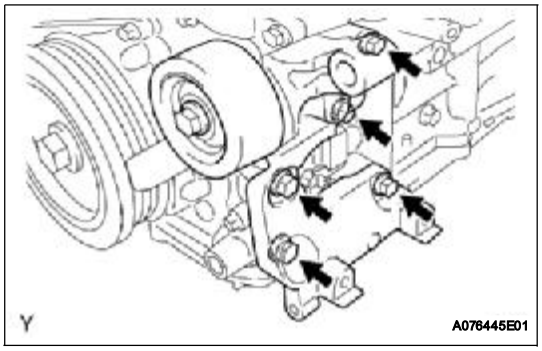

12. **SEPARATE VANE PUMP ASSEMBLY**
    (a) Disconnect the power steering pressure switch connector.
    (b) Remove the 2 bolts, then separate the vane pump.
    NOTICE:
    Do not hit the pulley with other parts when separating the vane pump.
    HINT:
    The vane pump is suspended securely.

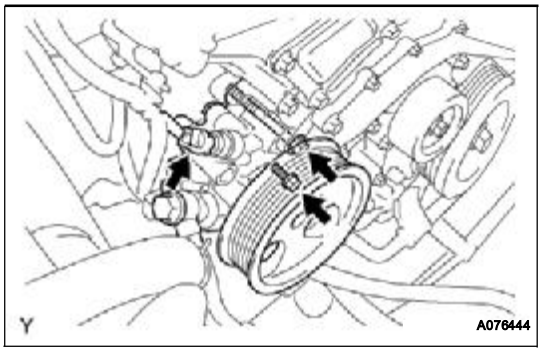

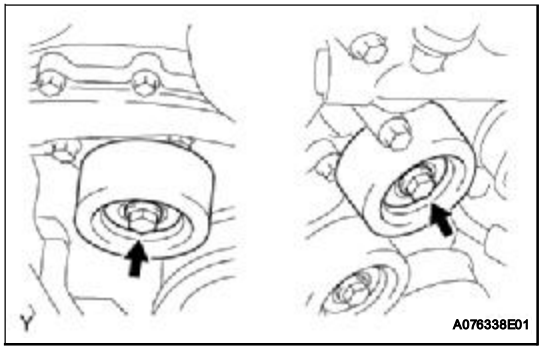

13. REMOVE NO. 2 IDLER PULLEY SUB-ASSEMBLY

(a) Remove the 2 bolts, then remove the No. 2 idler pulleys.

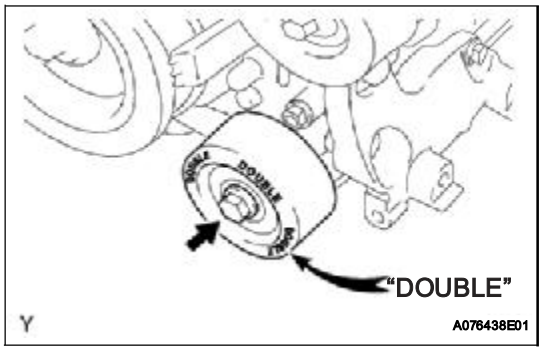

14. REMOVE NO. 1 IDLER PULLEY SUB-ASSEMBLY

(a) Remove the bolt, then remove the No. 1 idler pulley.

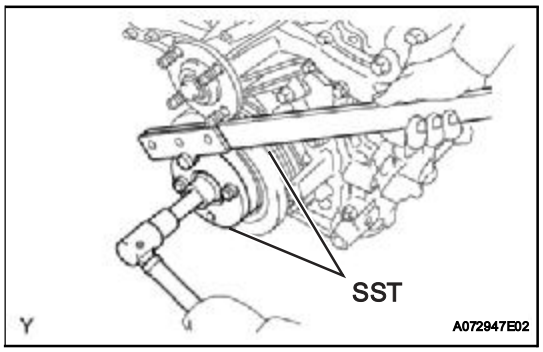

15. REMOVE CRANKSHAFT PULLEY

(a) Using SST, hold the crankshaft pulley and loosen the pulley set bolt.
SST 09213-54015 (91651-60855), 09330-00021

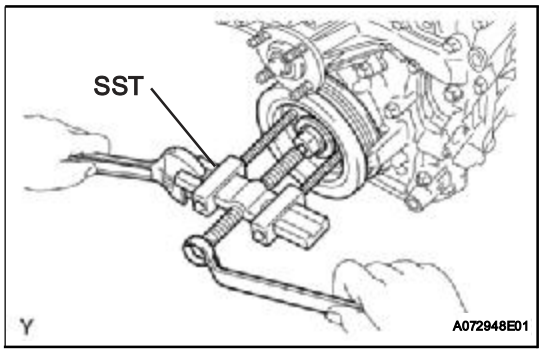

(b) Using the pulley set bolt and SST, remove the crankshaft pulley.
SST 09950-50013 (09951-05010, 09952-05010, 09953-05020, 09954-05030)

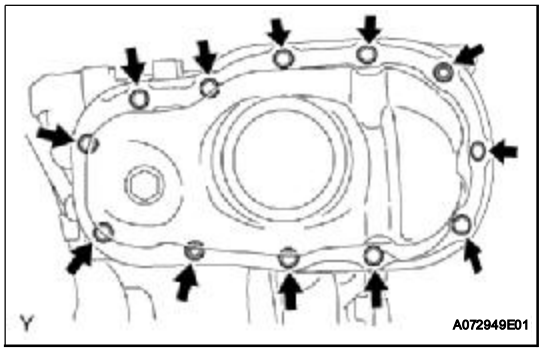

16. REMOVE NO. 2 OIL PAN SUB-ASSEMBLY

(a) Remove the 10 bolts and 2 nuts.

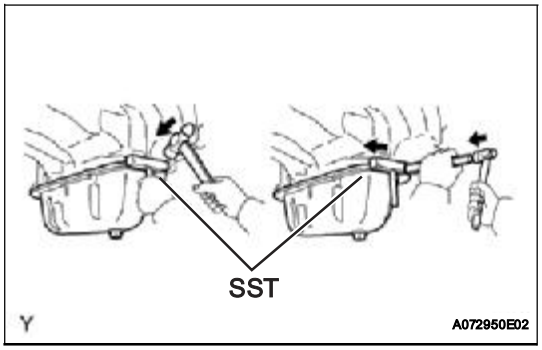

(b) Insert the blade of SST between the oil pan and No. 2 oil pan, cut off applied sealer and remove the No. 2 oil pan.
SST 09032-00100
NOTICE:
- **Be careful not to damage the contact surfaces of the oil pan and No. 2 oil pan.**
- **Be careful not to damage the No. 2 oil pan flange.**

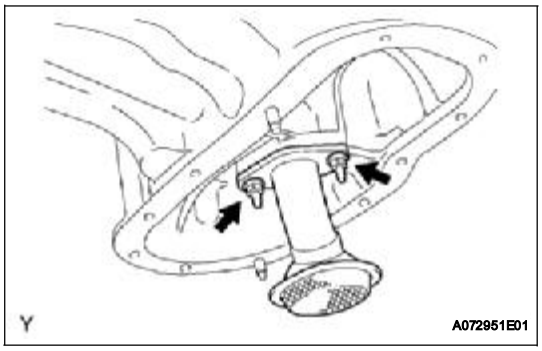

17. REMOVE OIL STRAINER SUB-ASSEMBLY
(a) Remove the 2 nuts, then remove the oil strainer and gasket.

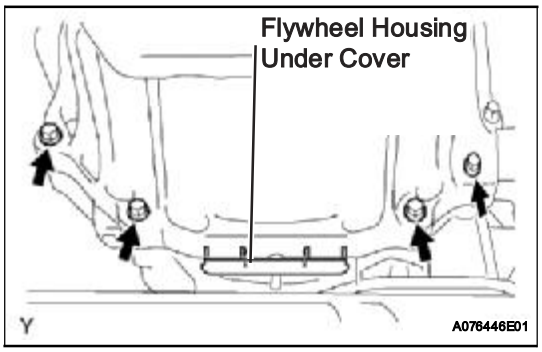

18. REMOVE OIL PAN SUB-ASSEMBLY
(a) Remove the 4 housing bolts.
(b) Remove the flywheel housing under cover.

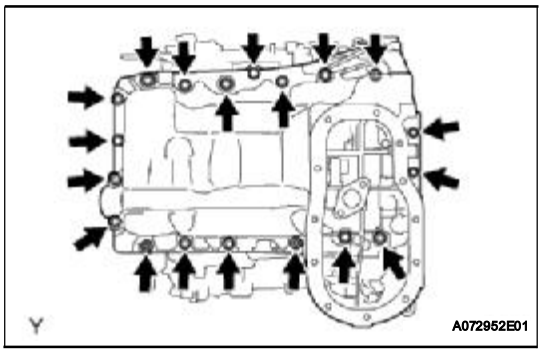

(c) Remove the 17 bolts and 2 nuts.

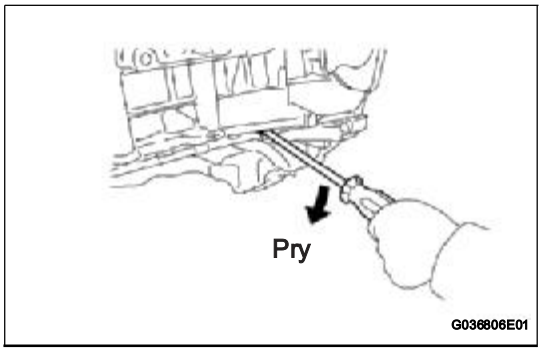

(d) Using a screwdriver, remove the oil pan by prying between the oil pan and cylinder block.
NOTICE:
Be careful not to damage the contact surfaces of the cylinder block and oil pan.
(e) Remove the O-ring from the oil pump.

19. REMOVE AIR CLEANER ASSEMBLY (See page ES-429)

20. REMOVE THROTTLE BODY BRACKET (See page FU-11)

21. **REMOVE OIL BAFFLE PLATE (See page FU-11)**
22. **REMOVE NO. 1 SURGE TANK STAY (See page FU-11)**
23. **REMOVE NO. 2 SURGE TANK STAY (See page FU-12)**
24. **REMOVE INTAKE AIR SURGE TANK (See page FU-12)**
25. **REMOVE IGNITION COIL ASSEMBLY (See page IG-8)**
26. **REMOVE CAMSHAFT TIMING OIL CONTROL VALVE ASSEMBLY (See page ES-414)**
27. **REMOVE VVT SENSOR (See page ES-417)**
28. **REMOVE WATER INLET (See page CO-8)**
29. **REMOVE CYLINDER HEAD COVER SUB-ASSEMBLY (See page EM-40)**
30. **REMOVE CYLINDER HEAD COVER SUB-ASSEMBLY LH (See page EM-40)**
31. **REMOVE TIMING CHAIN OR BELT COVER SUB-ASSEMBLY**
    (a) Remove the 24 bolts and 2 nuts.

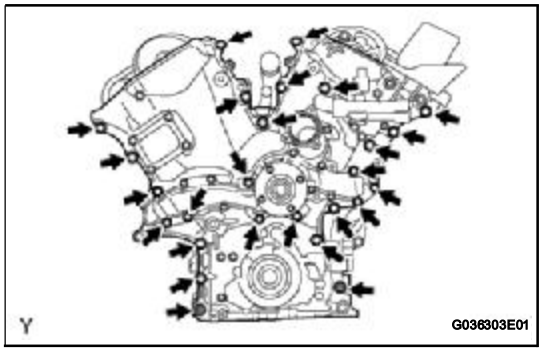

    (b) Remove the timing chain cover by prying between the timing chain cover, cylinder head or cylinder block with a screwdriver.
    NOTICE:
    Be careful not to damage the contact surfaces of the timing chain cover, cylinder block and cylinder head.
    (c) Remove the O-ring from the LH cylinder head.

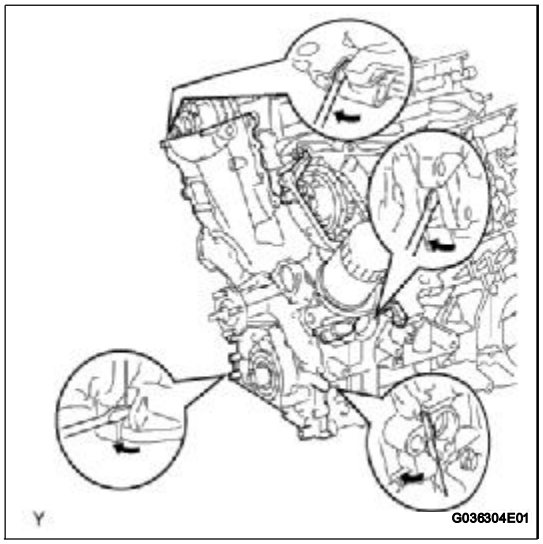

32. **REMOVE TIMING GEAR CASE OR TIMING CHAIN CASE OIL SEAL (See page EM-163)**

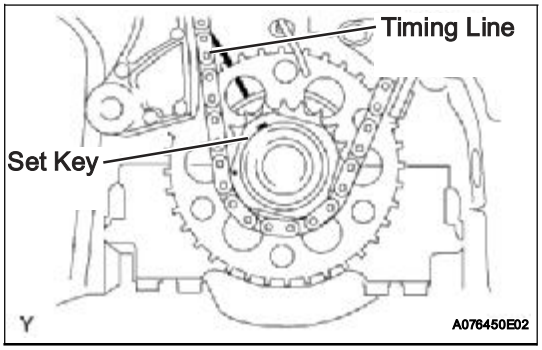

33. SET NO. 1 COMPRESSION TO TDC/COMPRESSION

(a) Using the crankshaft pulley set bolt, turn the crankshaft to align the crankshaft set key with the timing line of the cylinder block.

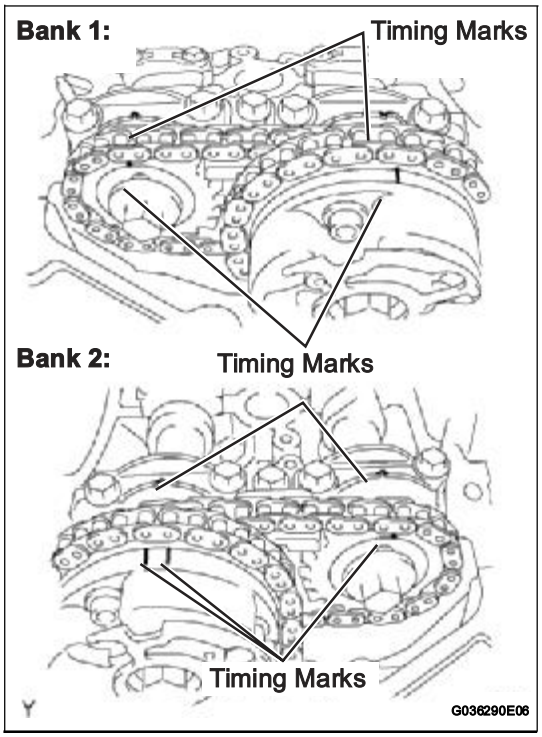

(b) Check that the timing marks of the camshaft timing gears are aligned with the timing marks of the bearing caps as shown in the illustration.
If not, turn the crankshaft 1 complete revolution (360°) and align the timing marks as above.

34. REMOVE NO. 1 CHAIN TENSIONER ASSEMBLY

NOTICE:

- **Never rotate the crankshaft with the chain tensioner removed.**
- **When rotating the camshaft with the timing chain removed, rotate the crankshaft counterclockwise 40° from the TDC first.**

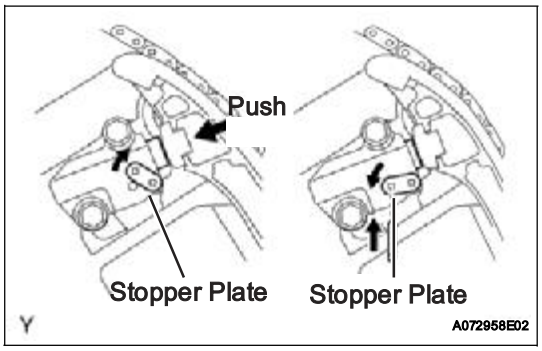

(a) While turning the stopper plate of the tensioner upward, push in the plunger of the chain tensioner as shown in the illustration.

(b) While turning the stopper plate of the tensioner downward, insert a bar of ϕ 3.5 mm (0.138) into the holes in the stopper plate and tensioner to fix the stopper plate.

(c) Remove the 2 bolts, then remove the chain tensioner.

35. REMOVE CHAIN TENSIONER SLIPPER

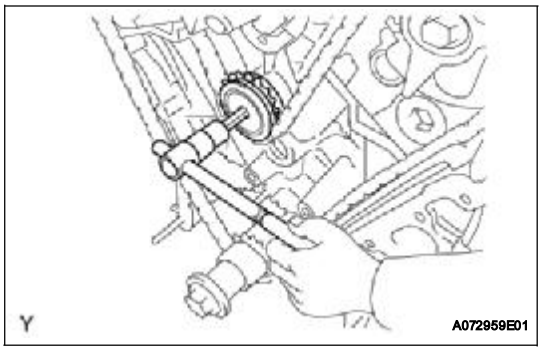

36. REMOVE IDLE SPROCKET ASSEMBLY

(a) Using a 10 mm hexagon wrench, remove the No. 2 idle gear shaft, No. 1 idle gear and No. 1 idle gear shaft.

37. REMOVE NO. 2 CHAIN VIBRATION DAMPER

(a) Remove the 2 No. 2 chain vibration dampers.

38. REMOVE CHAIN SUB-ASSEMBLY

INSTALLATION

1. INSTALL CHAIN TENSIONER SLIPPER

2. INSTALL NO. 1 CHAIN TENSIONER ASSEMBLY

(a) While turning the stopper plate of the tensioner clockwise, push in the plunger of the tensioner as shown in the illustration.

(b) While turning the stopper plate of the tensioner counterclockwise, insert a bar of ϕ 35 mm (0.138 in.) into the holes in the stopper plate and tensioner to fix the stopper plate.

(c) Install the chain tensioner with the 2 bolts.
Torque: 10 N*m (102 kgf*cm, 7.4 ft.*lbf)

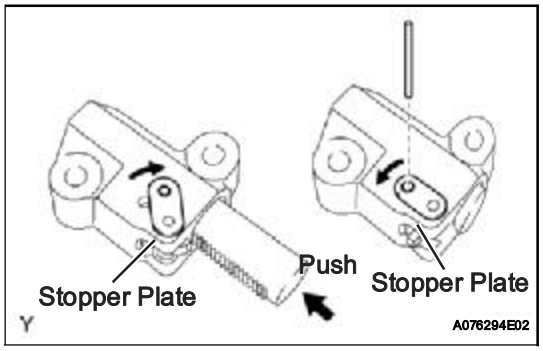

3. INSTALL CHAIN SUB-ASSEMBLY

(a) Set the No. 1 cylinder to TDC/ compression.

(1) Align the timing marks of the camshaft timing gears and bearing caps.

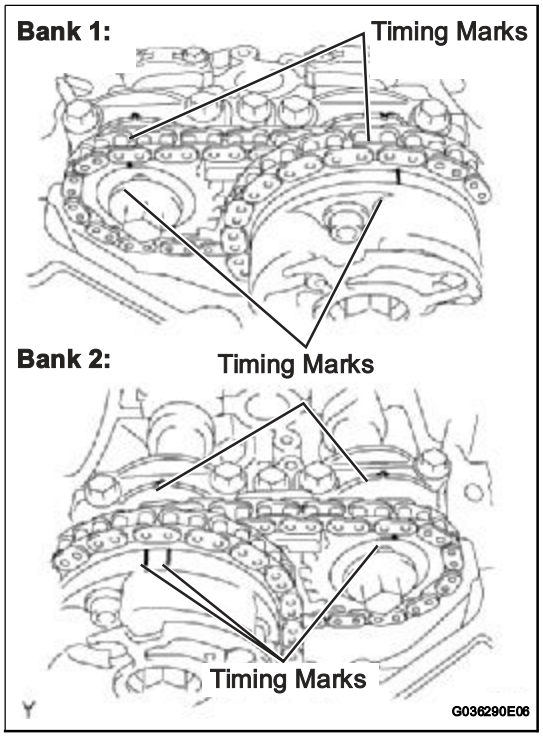

(2) Using the crankshaft pulley set bolt, turn the crankshaft to align the crankshaft set key with the timing line of the cylinder block.

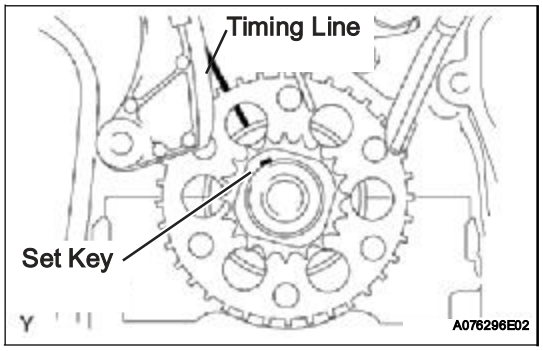

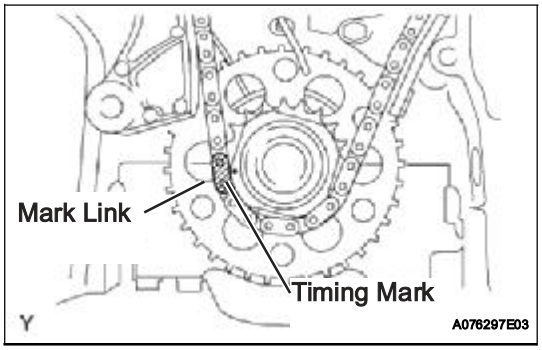

(b) Align the yellow mark link with the timing mark of the crankshaft timing link.

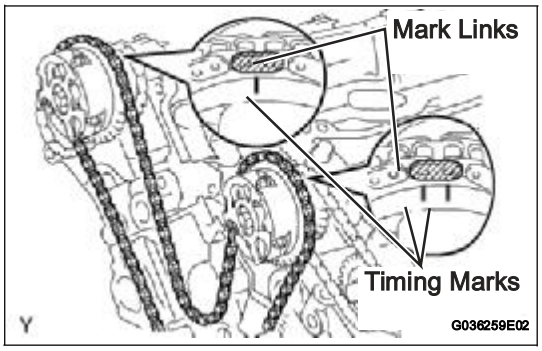

(c) Align the orange mark links with the timing marks of the camshaft timing gears, and install the chain.

4. INSTALL NO. 2 CHAIN VIBRATION DAMPER

(a) Install the 2 No. 2 chain vibration dampers.

5. INSTALL IDLE SPROCKET ASSEMBLY

(a) Apply a light coat of engine oil to rotating surface of the No. 1 idle gear shaft.

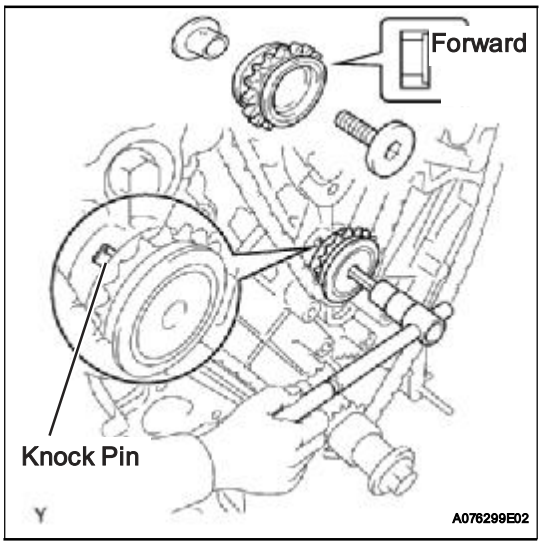

(b) Temporarily install the No. 1 idle gear shaft together with the No. 2 idle gear shaft with the knock pin of the No. 1 idle gear shaft and the knock pin groove of the cylinder block are aligned.
NOTICE:
Orient the idle gear shafts correctly.

(c) Using a 10 mm hexagon wrench, tighten the No. 2 idle gear shaft.
Torque: 60 N*m (612 kgf*cm, 44 ft.*lbf)

(d) Remove the bar from the chain tensioner.

6. INSTALL TIMING GEAR CASE OR TIMING CHAIN CASE OIL SEAL (See page EM-163)

7. INSTALL TIMING CHAIN OR BELT COVER SUB-ASSEMBLY

(a) Remove any old packing (FIPG) material.
HINT:
Do not drop any oil on the contact surfaces of the timing chain cover, cylinder head and cylinder block.

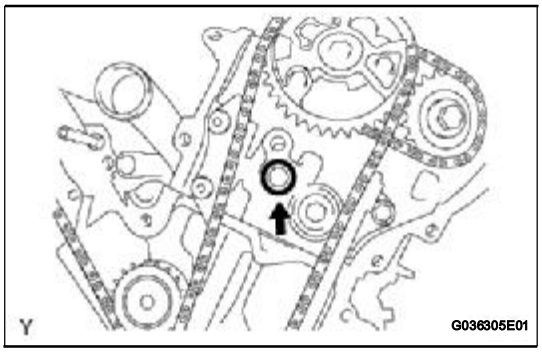

(b) Install a new O-ring onto the bank 2 cylinder head as shown in the illustration.

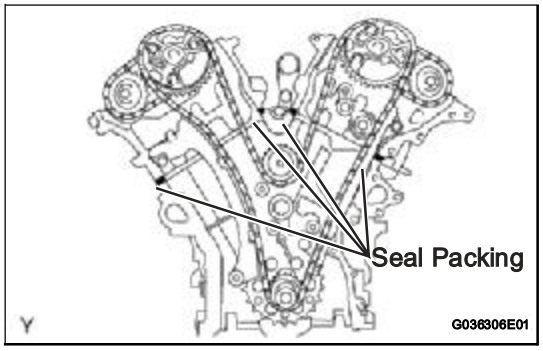

(c) Apply continuous beads of seal packing (diameter 3 to 4 mm (0.12 to 0.16 in.)) to the 4 locations shown in the illustration.
Seal packing:
Toyota Genuine Seal Packing Black, Three Bond 1207B or the equivalent

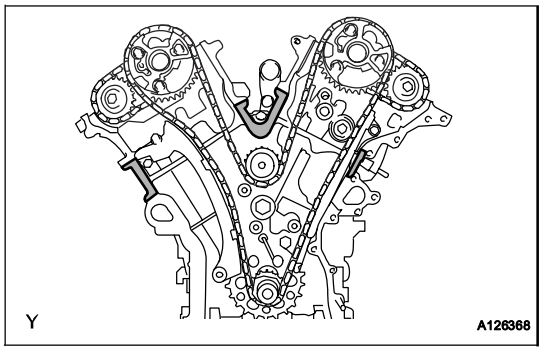

(d) Keep the seal surface between the cylinder block and the cylinder head shown in the illustration free of oil before installing the chain cover.

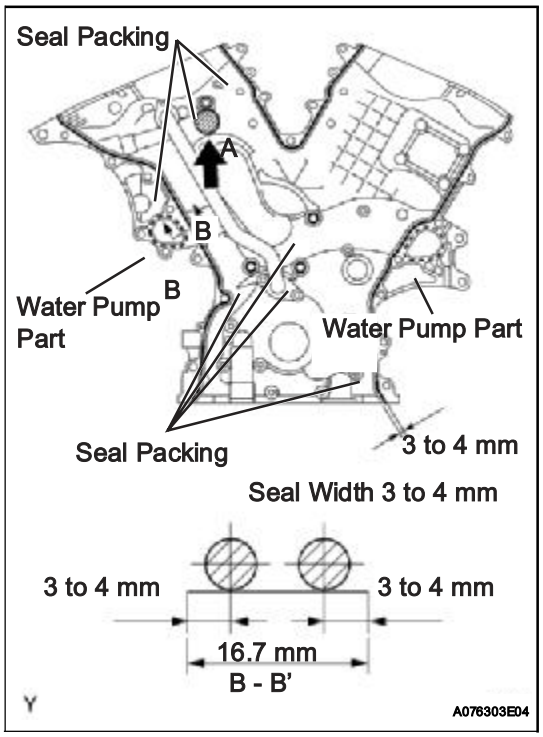

(e) Apply continuous beads of seal packing (diameter 3 to 4 mm (0.12 to 0.16 in.)) to the timing chain cover as shown in the illustration.
Seal packing:
Water pump part:
Toyota Genuine Seal Packing 1282B, Three Bond 1282B or the equivalent
Other parts:
Toyota Genuine Seal Packing Black, Three Bond 1207B or the equivalent
NOTICE:
- **Install the timing chain cover within 3 minutes of applying the seal packing. The timing chain cover bolts and nuts must be tightened within 15 minutes of the installation. Otherwise the seal packing must be removed and reapplied.**
- **Do not apply seal packing to portion A shown in the illustration.**

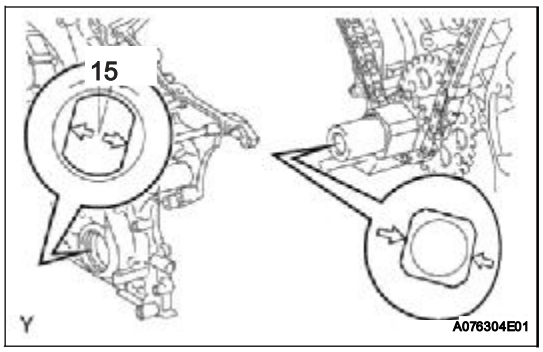

(f) Align the key way of the oil pump drive rotor with the rectangular portion of the crankshaft timing gear, and slide the timing chain cover into place.

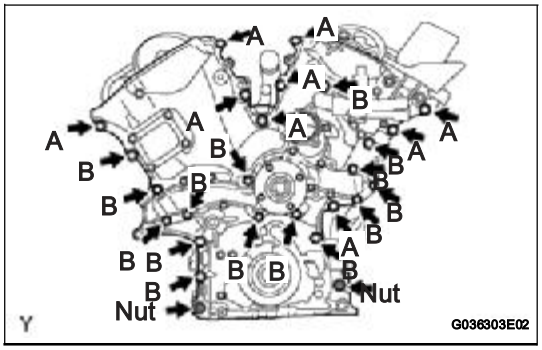

(g) Install the timing chain cover with the 24 bolts and 2 nuts. Tighten the bolts and nuts uniformly in several steps.
Torque: 23 N*m (235 kgf*cm, 17 ft.*lbf)
NOTICE:
Pay attention not to wrap the chain and slipper over the timing chain cover seal line.
Each bolt length is as follows

Bolt	Length
A	25 mm (0.98 in.)
B	55 mm (2.17 in.)

8. INSTALL CYLINDER HEAD COVER SUB-ASSEMBLY LH (See page EM-57)

9. INSTALL CYLINDER HEAD COVER SUB-ASSEMBLY (See page EM-58)

10. INSTALL WATER INLET (See page CO-9)

11. INSTALL VVT SENSOR (See page ES-417)

12. INSTALL CAMSHAFT TIMING OIL CONTROL VALVE ASSEMBLY (See page ES-415)

13. INSTALL IGNITION COIL ASSEMBLY (See page IG-8)

14. INSTALL INTAKE AIR SURGE TANK (See page FU-17)

15. INSTALL NO. 2 SURGE TANK STAY (See page FU-19)

16. INSTALL NO. 1 SURGE TANK STAY (See page FU-19)

17. INSTALL OIL BAFFLE PLATE (See page FU-19)

18. INSTALL THROTTLE BODY BRACKET (See page FU-19)

19. INSTALL AIR CLEANER ASSEMBLY (See page ES-431)

20. INSTALL OIL PAN SUB-ASSEMBLY

(a) Remove any old packing (FIPG) material.
HINT:
Do not drop any oil on the contact surfaces of the cylinder block, rear oil seal and oil pan.

(b) Install a new O-ring onto the oil pump.

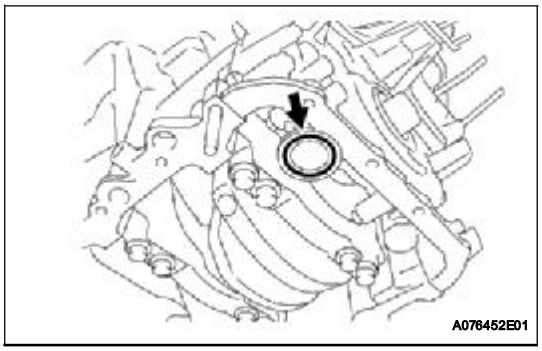

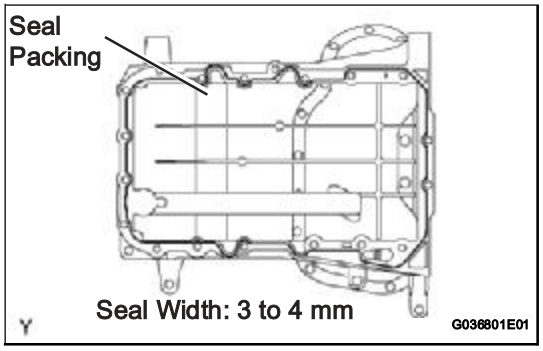

(c) Apply a continuous bead of seal packing (diameter 3 to 4 mm (0.12 to 0.16 in.)) to the oil pan as shown in the illustration.
Seal packing:
Toyota Genuine Seal Packing Black, Three Bond 1207B or the equivalent
NOTICE:
Install the oil pan within 3 minutes of applying the seal packing. Tighten the oil pan bolts and nuts within 15 minutes of installing the oil pan. Otherwise, the seal packing must be removed and reapplied.

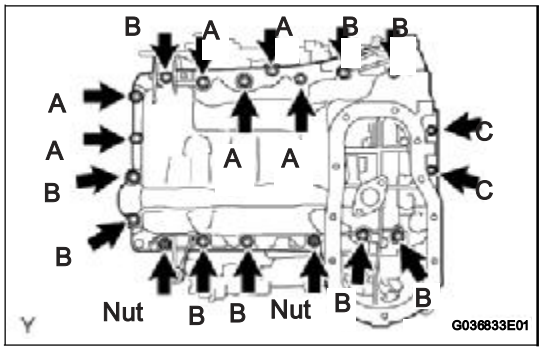

(d) Install the oil pan with the 17 bolts and 2 nuts, and tighten the bolts and nuts uniformly in several steps.
Torque: 10 mm (0.39 in.) head
10 N*m (102 kgf*cm, 7.4 ft.*lbf)
12 mm (0.47 in.) head
21 N*m (214 kgf*cm, 16 ft.*lbf)
Nut
21 N*m (1,214 kgf*cm, 16 ft.*lbf)
HINT:
Each bolt length is as follows:

Bolt	Length
A	25 mm (0.98 in.)
B	45 mm (1.77 in.)
C	14 mm (0.55 in.)

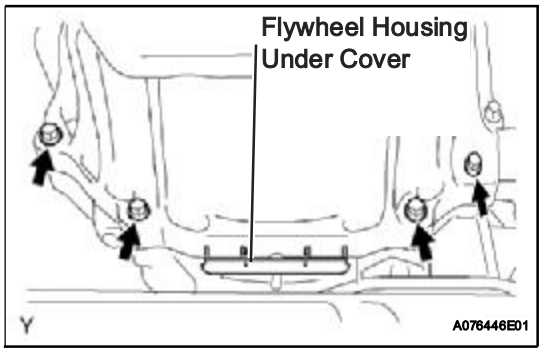

(e) Install the 4 housing bolts.
Torque: 37 N*m (377 kgf*cm, 27 ft.*lbf)
(f) Install the flywheel housing under cover.

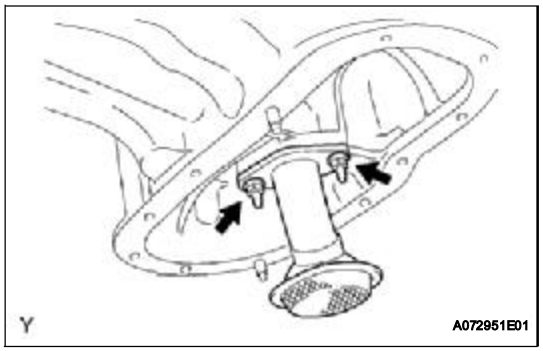

21. INSTALL OIL STRAINER SUB-ASSEMBLY
(a) Install a new gasket and the oil strainer with the 2 nuts.
Torque: 9.0 N*m (92 kgf*cm, 80 in.*lbf)

22. INSTALL NO. 2 OIL PAN SUB-ASSEMBLY
(a) Remove any old packing (FIPG) material.
HINT:
Do not drop any oil on the contact surfaces of the oil pan and No. 2 oil pan.

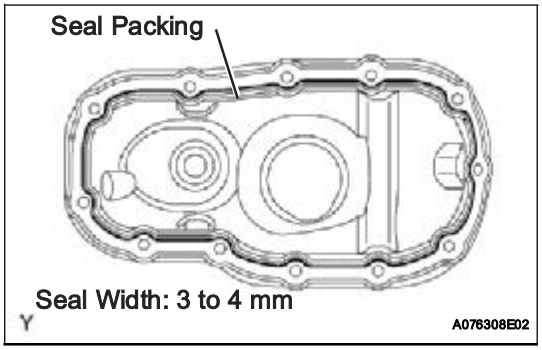

(b) Apply a continuous bead of seal packing (diameter 3 to 4 mm (0.12 to 0.16 in.)) as shown in the illustration.
Seal packing:
Toyota Genuine Seal Packing Black, Three Bond 1207B or the equivalent
NOTICE:
Install the No. 2 oil pan within 3 minutes of applying the seal packing. Tighten the No. 2 oil pan bolts and nuts within 15 minutes of installing the No. 2 oil pan. Otherwise, the seal packing must be removed and reapplied.

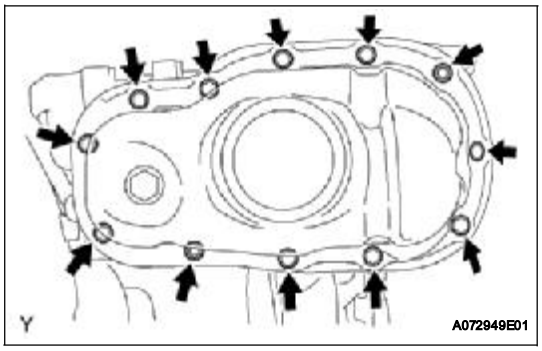

(c) Install the No. 2 oil pan with the 10 bolts and 2 nuts. Tighten the bolts and nuts uniformly in several steps.
Torque: Bolt
9.0 N*m (92 kgf*cm, 80 in.*lbf)
Nut
10 N*m (102 kgf*cm, 7.4 in.*lbf)

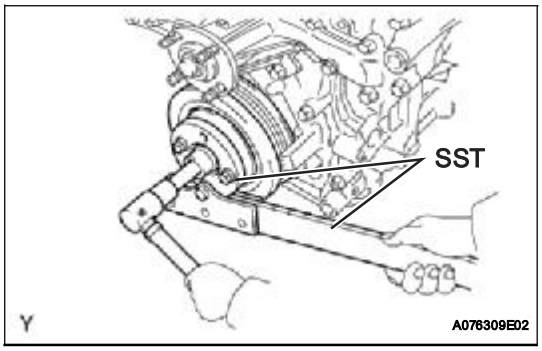

23. INSTALL CRANKSHAFT PULLEY
(a) Using SST, install the pulley set bolt.
SST 09213-54015 (91651-60855), 09330-00021
Torque: 250 N*m (2,549 kgf*cm, 184 ft.*lbf)

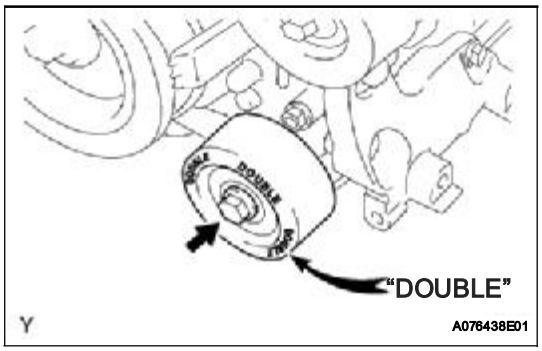

24. INSTALL NO. 1 IDLER PULLEY SUB-ASSEMBLY
(a) Install the idler pulley with the bolt.
Torque: 39 N*m (398 kgf*cm, 29 ft.*lbf)
HINT:
DOUBLE is marked on the No. 1 idler pulley to distinguish it from the No. 2 idler pulley.

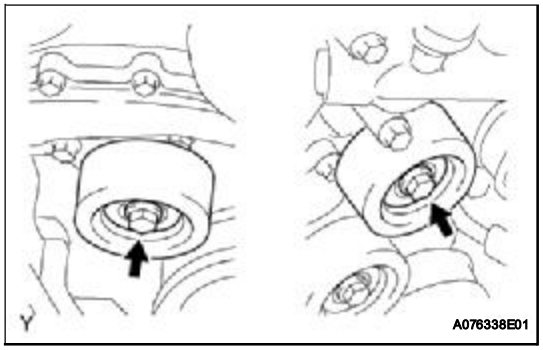

25. INSTALL NO. 2 IDLER PULLEY SUB-ASSEMBLY

(a) Install the 2 No. 2 idler pulleys with the 2 bolts.
Torque: 54 N*m (551 kgf*cm, 40 ft.*lbf)

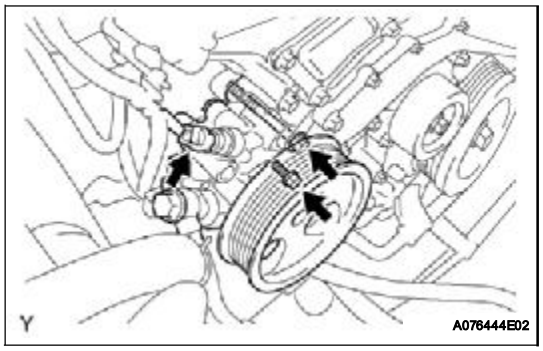

26. INSTALL VANE PUMP ASSEMBLY

(a) Install the vane pump with the 2 bolts.
Torque: 43 N*m (438 kgf*cm, 32 ft.*lbf)
NOTICE:
Do not hit the pulley with other parts when installing the vane pump.

(b) Connect the power steering pressure switch connector.

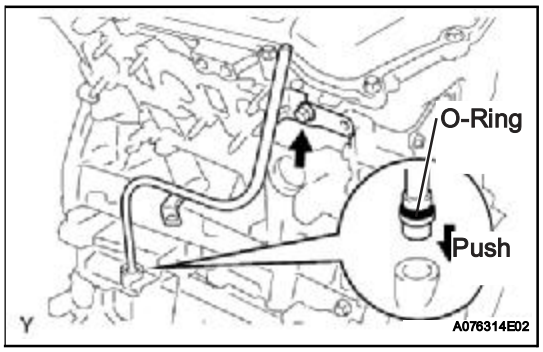

27. INSTALL OIL LEVEL GAUGE GUIDE

(a) Install a new O-ring onto the oil level gauge guide.
(b) Apply a light coat of engine oil to the O-ring.
(c) Push the oil level gauge guide end into the guide hole in the oil pan.
(d) Install the oil level gauge guide with the bolt.
Torque: 9.0 N*m (92 kgf*cm, 80 in.*lbf)
(e) Install the oil level gauge guide.

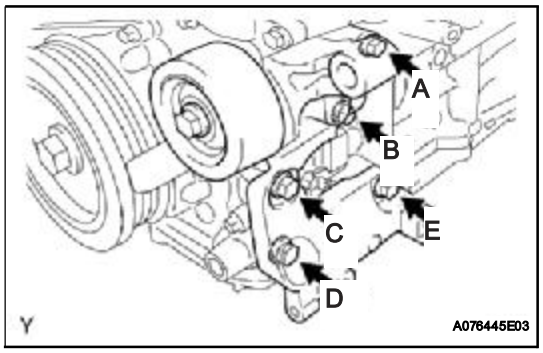

28. INSTALL V-RIBBED BELT TENSIONER ASSEMBLY
NOTICE:
The bolt in position A is not reusable.
HINT:
Each bolt length is as follows:

Position	Length
A	70 mm (2.76 in.)
B, C, D and E	33 mm (1.30 in.)

(a) Use a new bolt in position A.
(b) Finger-tighten the bolts in positions A and E and install the bracket.
(c) Tighten the bolts in positions A and E.
Torque: 36 N*m (267 kgf*cm, 27 ft.*lbf)
(d) Tighten the bolts in positions B, C and D.
Torque: 36 N*m (267 kgf*cm, 27 ft.*lbf)

29. INSTALL COOLER COMPRESSOR ASSEMBLY (See page ES-421)

30. INSTALL GENERATOR ASSEMBLY
Refer to the procedures up to "INSTALL GENERATOR ASSEMBLY" (See page CH-17)

31. **INSTALL FAN**
    Refer to the procedures up to "INSTALL FAN PULLEY" (See page CO-17).
32. **INSTALL FRONT DIFFERENTIAL CARRIER ASSEMBLY (for 4WD)**
    Refer to the procedures up to "INSTALL FRONT DIFFERENTIAL CARRIER ASSEMBLY" (See page DF-42).
33. **INSTALL POWER STEERING LINK ASSEMBLY (for 2WD)**
    Refer to the procedures up to "INSTALL POWER STEERING LINK ASSEMBLY" (See page PS-30).
34. **INSTALL POWER STEERING LINK ASSEMBLY (for 4WD)**
    Refer to the procedures up to "INSTALL POWER STEERING LINK ASSEMBLY" (See page PS-49).
35. **INSTALL BATTERY**
36. **ADD ENGINE COOLANT (See page CO-3)**
37. **ADD ENGINE OIL (See page LU-5)**
38. **ADD POWER STEERING FLUID**
39. **BLEED POWER STEERING FLUID (See page PS-2)**
40. **ADD DIFFERENTIAL OIL (for 4WD)**
41. **INSPECT DIFFERENTIAL OIL (for 4WD) (See page DF-3)**
42. **CHECK FOR ENGINE COOLANT LEAKAGE (See page CO-4)**
43. **CHECK FOR ENGINE OIL LEAKAGE**
44. **CHECK FOR POWER STEERING FLUID LEAKAGE**
45. **CHECK FOR DIFFERENTIAL OIL LEAKAGE**
46. **INSPECT AND ADJUST FRONT WHEEL ALIGNMENT** (See page SP-2)

CAMSHAFT

COMPONENTS

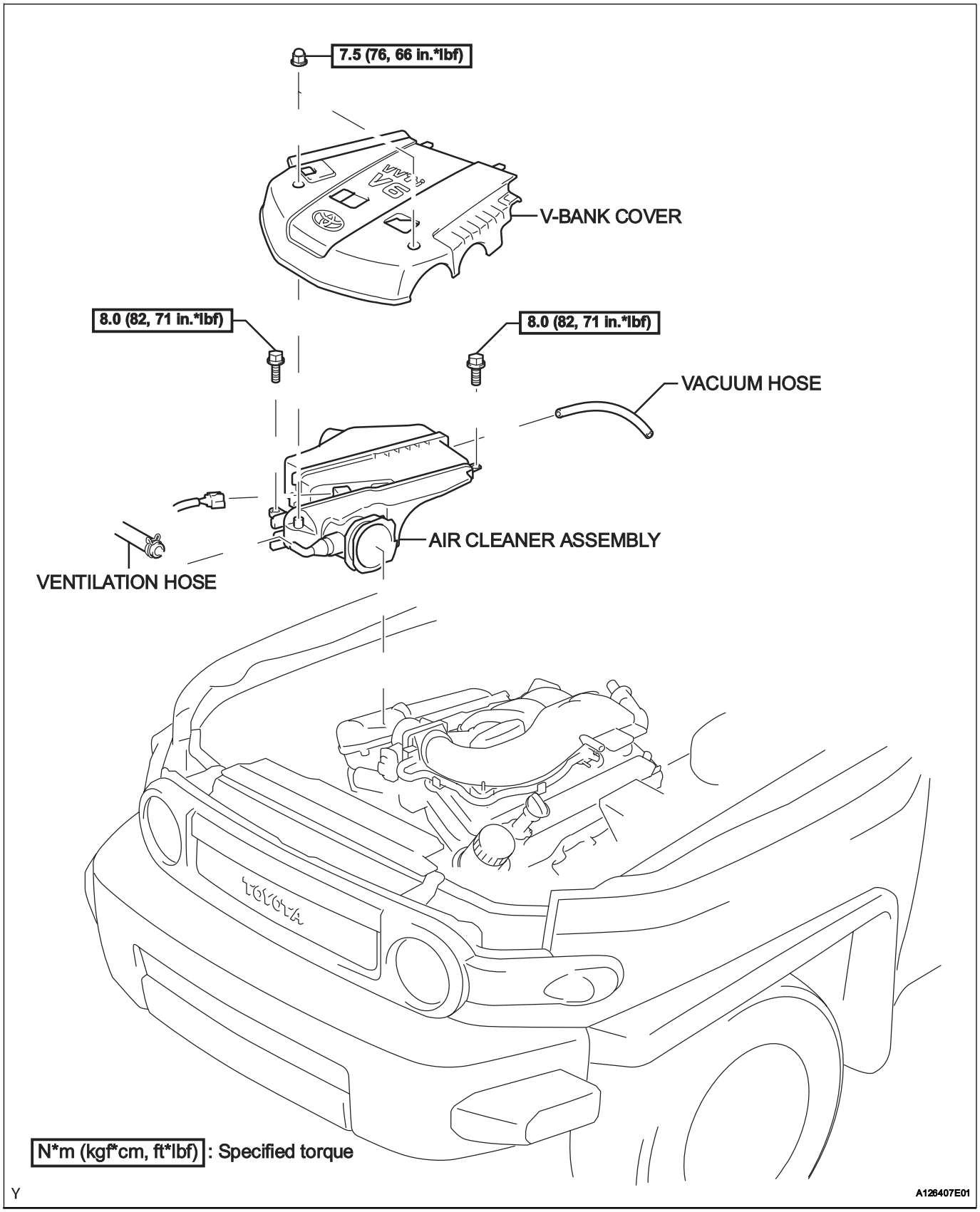

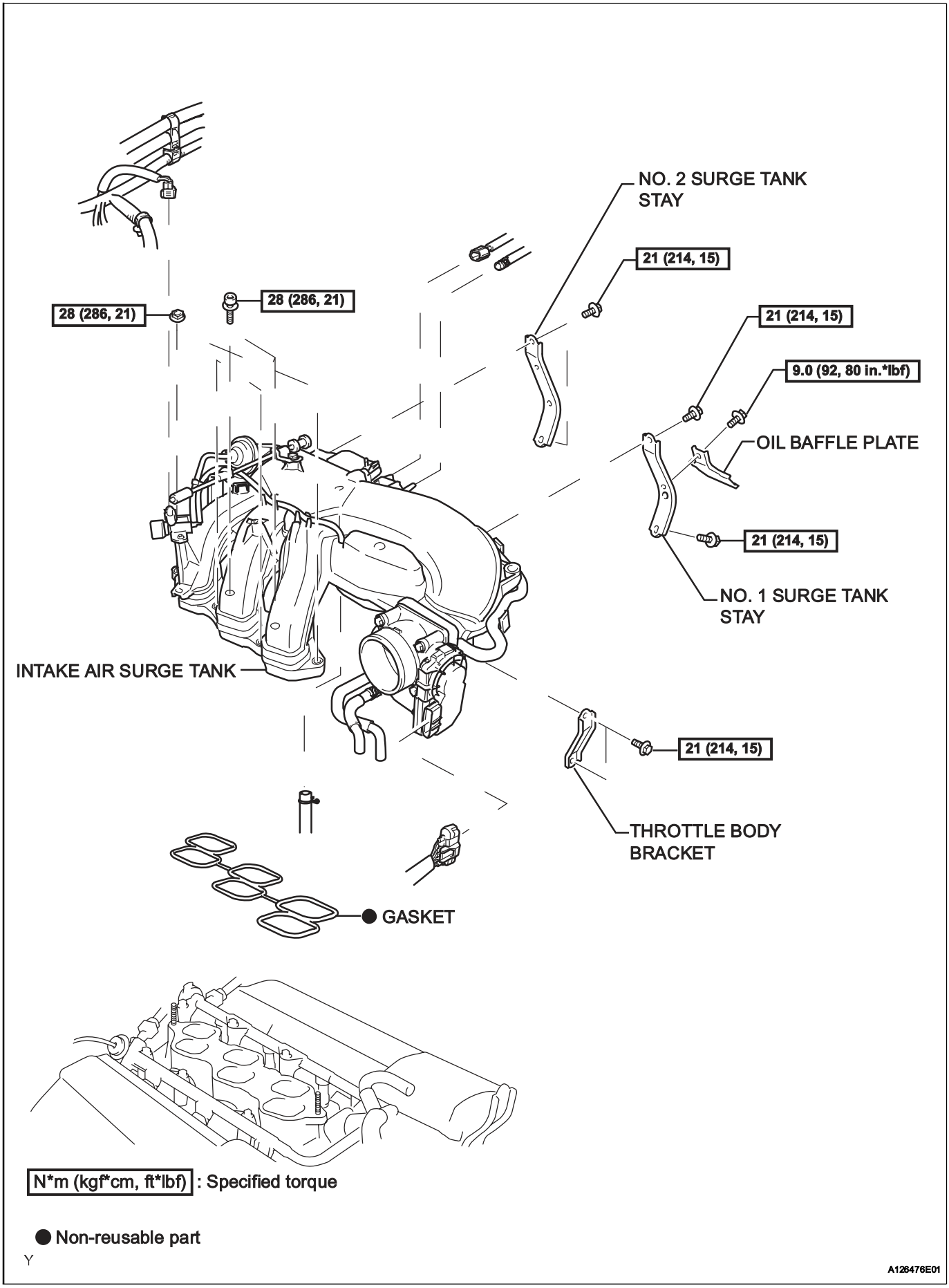
NO. 2 SURGE TANK STAY
21 (214, 15)
28 (286, 21)
28 (286, 21)
21 (214, 15)
9.0 (92, 80 in.*lbf)
OIL BAFFLE PLATE
21 (214, 15)
NO. 1 SURGE TANK STAY
INTAKE AIR SURGE TANK
21 (214, 15)
THROTTLE BODY BRACKET
GASKET
N*m (kgf*cm, ft*lbf) : Specified torque
Non-reusable part
Y
A126476E01

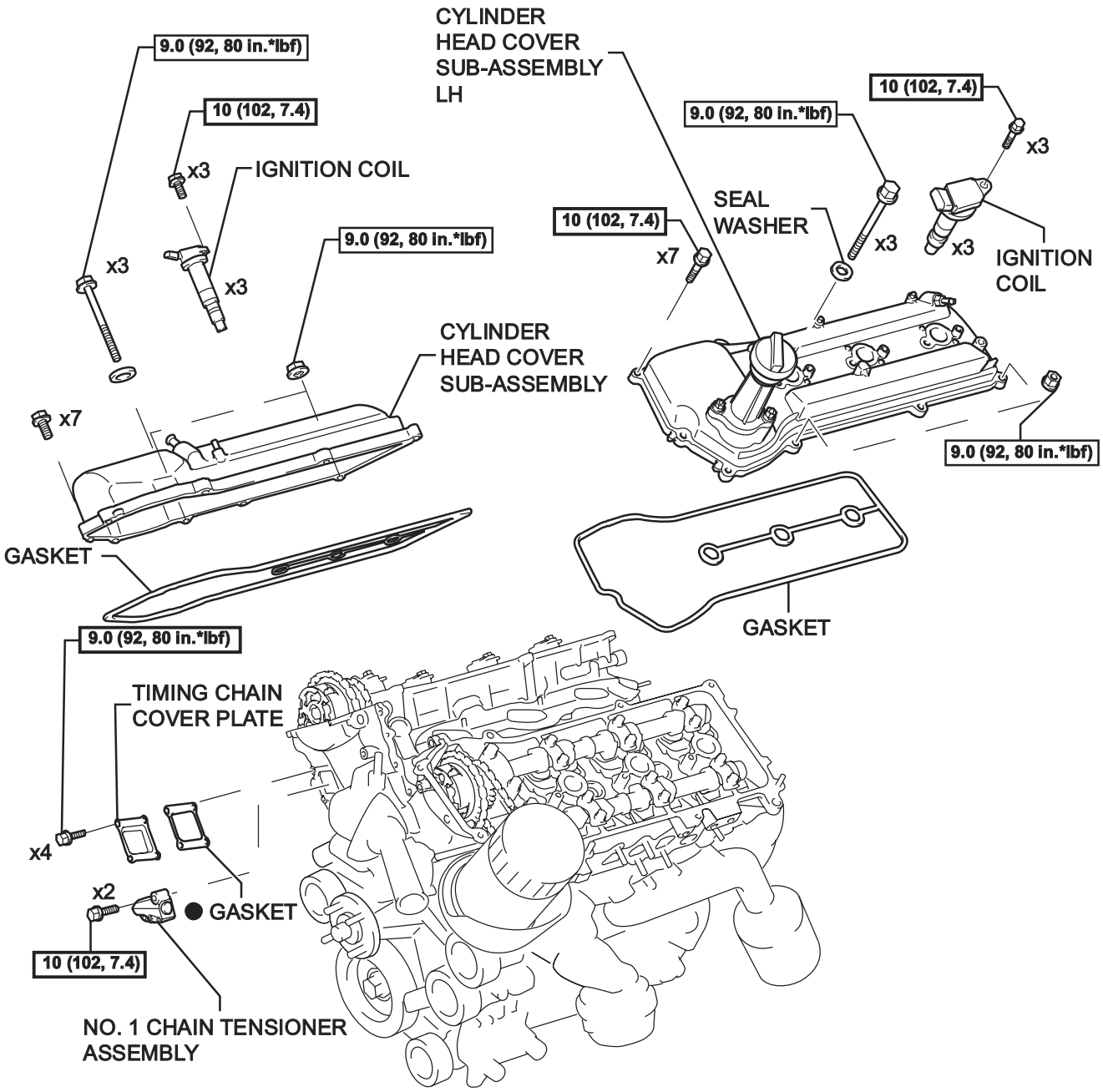

N*m (kgf*cm, ft*lbf) : Specified torque

● Non-reusable part

Y

A126426E01

For Bank 1:

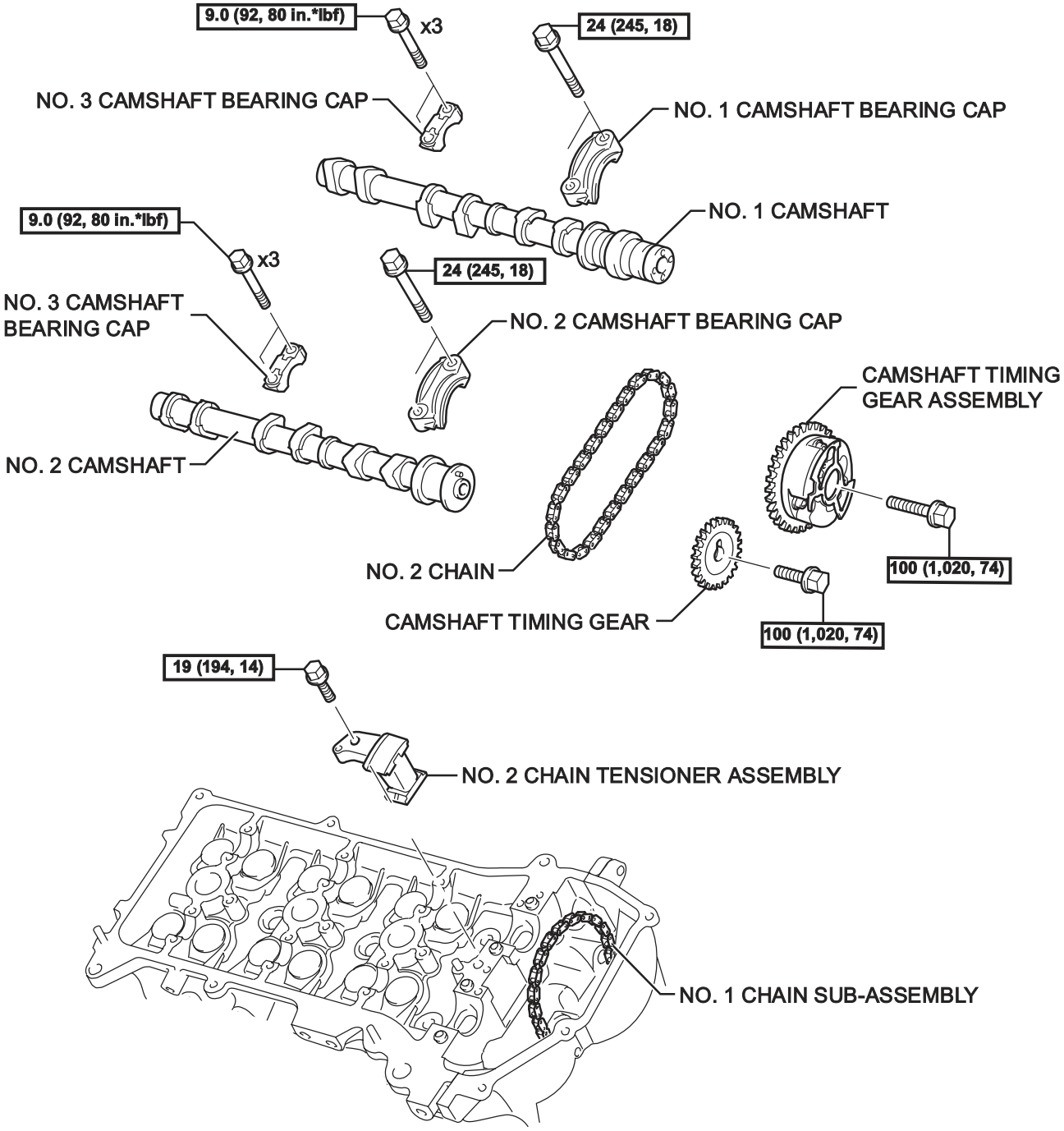

N*m (kgf*cm, ft*lbf) : Specified torque

Y

A126427E01

For Bank 2:

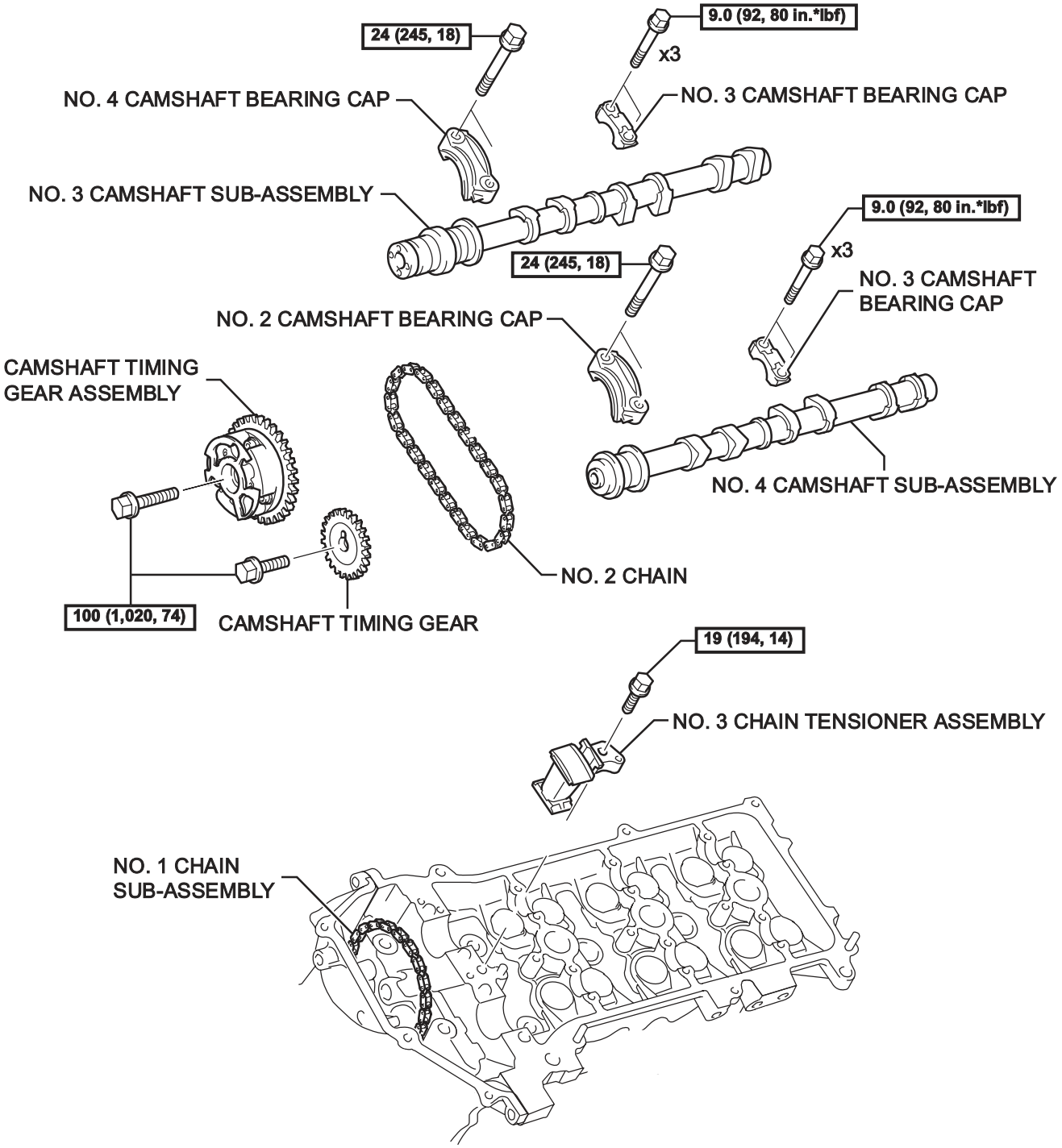

N*m (kgf*cm, ft*lbf) : Specified torque

Y

A126428E01

EM

REMOVAL

1. **DISCONNECT CABLE FROM NEGATIVE BATTERY TERMINAL**
2. **DRAIN ENGINE COOLANT (See page CO-3)**
3. **REMOVE V-BANK COVER (See page ES-428)**
4. **REMOVE AIR CLEANER ASSEMBLY (See page ES-429)**
5. **REMOVE THROTTLE BODY BRACKET (See page FU-11)**
6. **REMOVE OIL BAFFLE PLATE (See page FU-11)**
7. **REMOVE NO. 1 SURGE TANK STAY (See page FU-11)**
8. **REMOVE NO. 2 SURGE TANK STAY (See page FU-12)**
9. **REMOVE INTAKE AIR SURGE TANK (See page FU-12)**
10. **REMOVE IGNITION COIL ASSEMBLY (See page IG-8)**
11. **REMOVE CYLINDER HEAD COVER SUB-ASSEMBLY**
    (a) Remove the 10 bolts, 3 seal washers, 2 nuts, cylinder head cover and gasket.

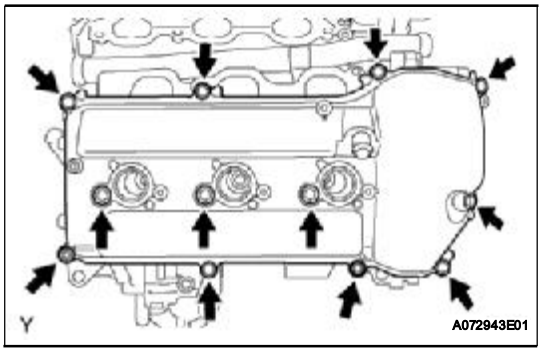

12. **REMOVE CYLINDER HEAD COVER SUB-ASSEMBLY LH**
    (a) Remove the 10 bolts, 3 seal washers, 2 nuts, cylinder head cover and gasket.

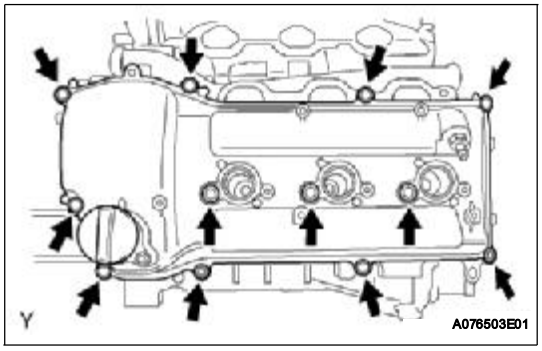

13. **SET NO. 1 CYLINDER TO TDC/COMPRESSION**
    (a) Turn the crankshaft pulley until its groove and the "0" timing mark of the timing chain cover are aligned.

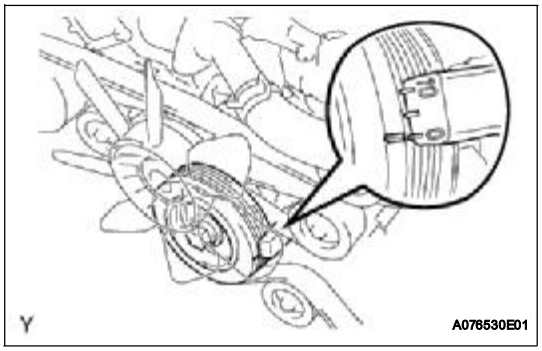

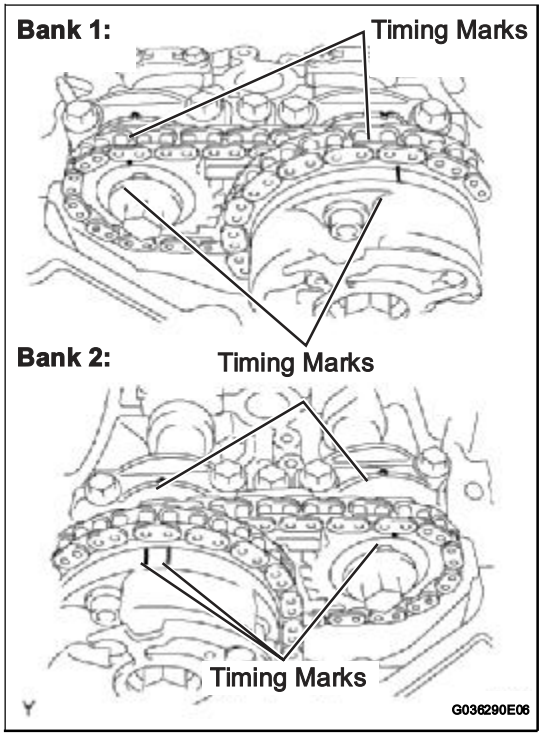

(b) Check that the timing marks of the camshaft timing gears are aligned with the timing marks of the bearing caps as shown in the illustration.
If not, turn the crankshaft 1 complete revolution (360°) and align the timing marks above.

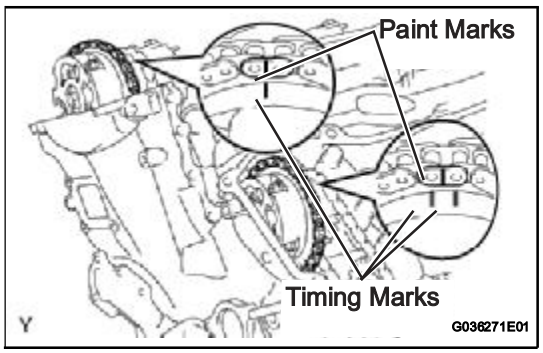

(c) Place paint marks on the No. 1 chain links corresponding to the timing marks of the camshaft timing gears.

14. REMOVE NO. 1 CHAIN TENSIONER ASSEMBLY

NOTICE:

- **Never rotate the crankshaft with the chain tensioner removed.**
- **When rotating the camshaft with the timing chain removed, rotate the crankshaft counterclockwise 40° from the TDC first.**

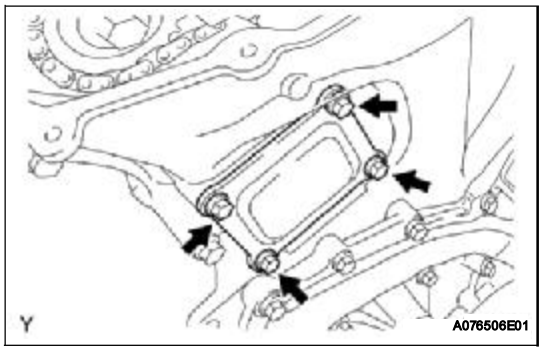

(a) Remove the 4 bolts, then remove the timing chain cover plate and gasket.

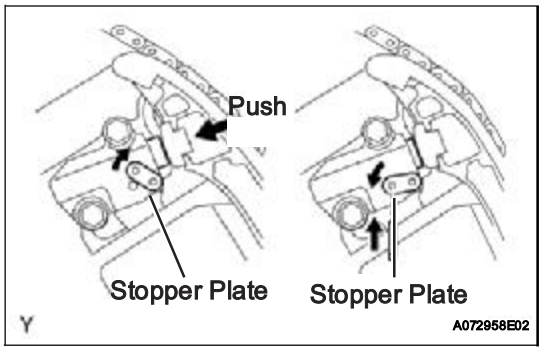

(b) While turning the stopper plate of the tensioner upward, push in the plunger of the chain tensioner as shown in the illustration.

(c) While turning the stopper plate of the tensioner downward, insert a bar of ϕ3.5 mm (0.138 in.) into the holes in the stopper plate and tensioner to fix the stopper plate.

(d) Remove the 2 bolts, then remove the chain tensioner.

15. REMOVE NO. 2 CAMSHAFT

NOTICE:

Keep the camshaft level while it is being removed. The camshaft thrust clearance is very small and failing to keep it level could crack or damage the cylinder head journal surface, which receives the thrust force. This could subsequently lead the camshaft to seize or break. Perform the following steps to avoid such problems.

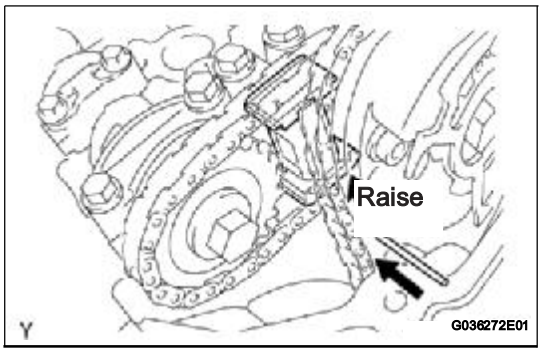

(a) While raising the chain tensioner No. 2, insert a pin of ϕ1.0 mm (0.039 in.) into the hole to fix it.

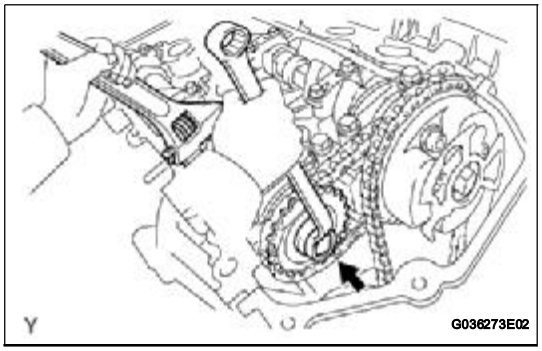

(b) Hold the hexagonal portion of the No. 2 camshaft with a wrench, and remove the camshaft timing gear set bolt.

NOTICE:

Be careful not to damage the cylinder head or valve lifter with the wrench.

(c) Separate the camshaft timing gear from the No. 2 camshaft.

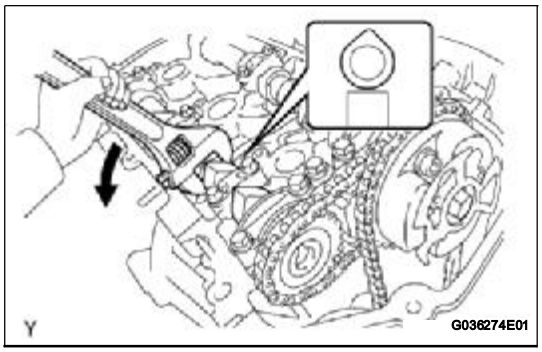

(d) Rotate the camshaft counterclockwise using the wrench so that the cam lobes of No. 1 cylinder face upward as shown in the illustration.

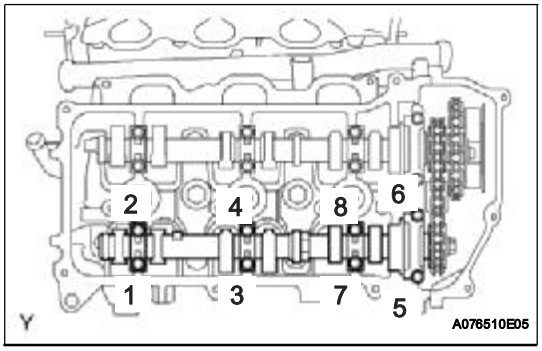

(e) Using several steps, uniformly loosen and remove the 8 bearing cap bolts in the sequence shown in the illustration.

(f) Remove the 4 bearing caps and No. 2 camshaft.

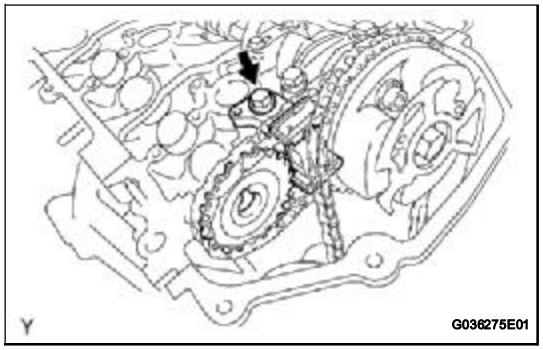

16. REMOVE NO. 2 CHAIN TENSIONER ASSEMBLY

(a) Remove the No. 2 chain tensioner bolt, then remove the No. 2 chain tensioner and camshaft timing gear.

17. REMOVE CAMSHAFT

NOTICE:

Keep the camshaft level while it is being removed. The camshaft thrust clearance is very small and failing to keep it level could crack or damage the cylinder head journal surface, which receives the thrust force. This could subsequently lead the camshaft to seize or break. Perform the following steps to avoid such problems.

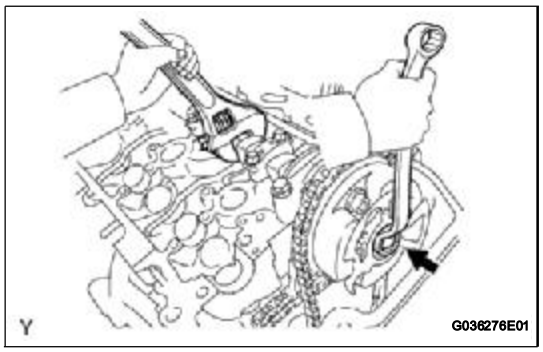

(a) Hold the hexagonal portion of the No. 1 camshaft with a wrench, and loosen the camshaft timing gear set bolt.

NOTICE:

- **Be careful not to damage the cylinder head or valve lifter with the wrench.**
- **Do not disassemble the camshaft timing gear assembly.**

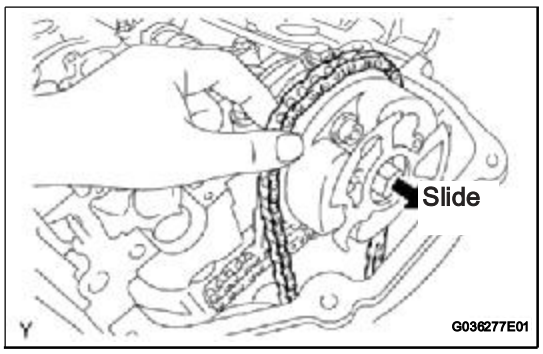

(b) Slide the camshaft timing gear and separate the No. 1 chain from the camshaft timing gear.

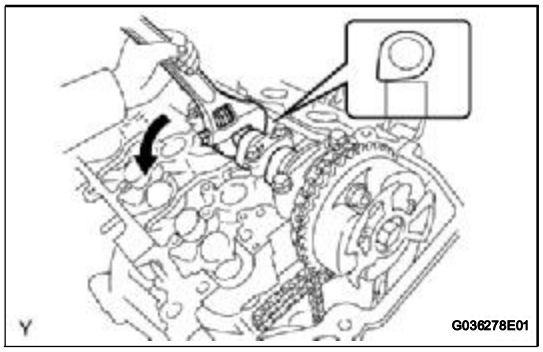

(c) Rotate the No. 1 camshaft counterclockwise using the wrench so that the cam lobes of No. 1 cylinder face downward as shown in the illustration.

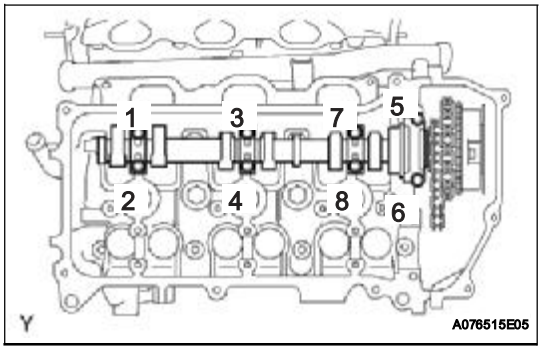

(d) Using several steps, loosen and remove the 8 bearing cap bolts in the sequence shown in the illustration.

(e) Remove the 4 bearing caps.

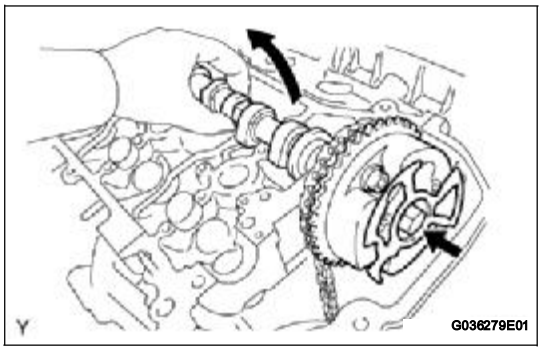

(f) Remove the camshaft timing gear set bolt with the No. 1 camshaft lifted up, then remove the No. 1 camshaft and camshaft timing gear with No. 2 chain.

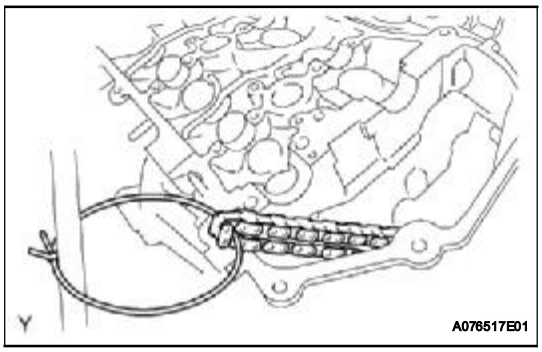

(g) Tie the No. 1 chain with a piece of string as shown in the illustration.
NOTICE:
Be careful not to drop anything inside the timing chain cover.

18. REMOVE NO. 4 CAMSHAFT SUB-ASSEMBLY
NOTICE:
Keep the camshaft level while it is being removed. The camshaft thrust clearance is very small and failing to keep it level could crack or damage the cylinder head journal surface, which receives the thrust force. This could subsequently lead the camshaft to seize or break. Perform the following steps to avoid such problems.

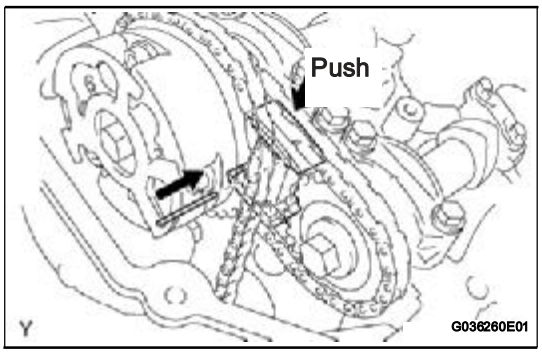

(a) While pushing down the No. 3 chain tensioner, insert a pin of ϕ 1.0 mm (0.039 in.) into the hole to fix it.

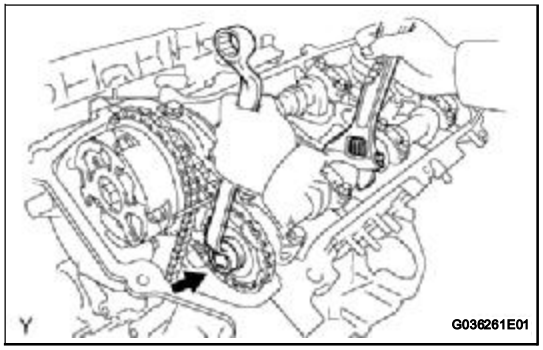

(b) Hold the hexagonal portion of the No. 4 camshaft with a wrench, and remove the camshaft timing gear set bolt.
NOTICE:
Be careful not to damage the cylinder head or valve lifter with the wrench.

(c) Separate the camshaft timing gear from the No. 4 camshaft.

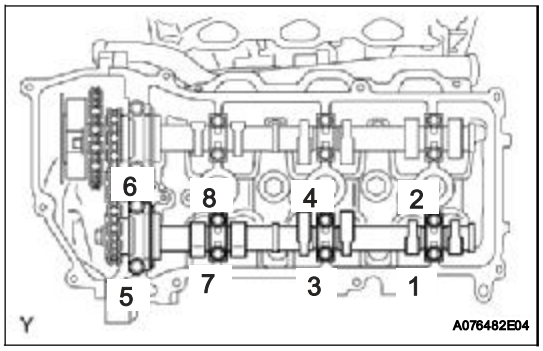

(d) Using several steps, uniformly loosen and remove the 8 bearing cap bolts in the sequence shown in the illustration.

(e) Remove the 4 bearing caps and No. 4 camshaft.

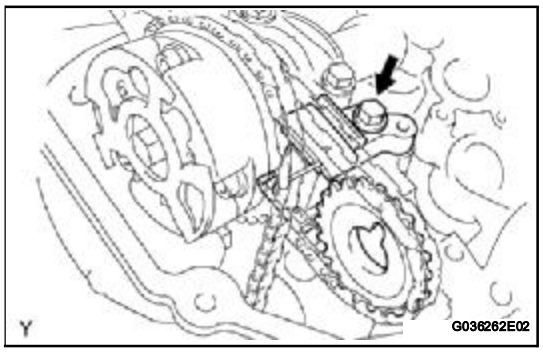

19. REMOVE NO. 3 CHAIN TENSIONER ASSEMBLY

(a) Remove the No. 3 chain tensioner bolt, then remove the No. 3 chain tensioner and camshaft timing gear.

20. REMOVE NO. 3 CAMSHAFT SUB-ASSEMBLY

NOTICE:
Keep the camshaft level while it is being removed. The camshaft thrust clearance is very small and failing to keep it level could crack or damage the cylinder head journal surface, which receives the thrust force. This could subsequently lead the camshaft to seize or break. Perform the following steps to avoid such problems.

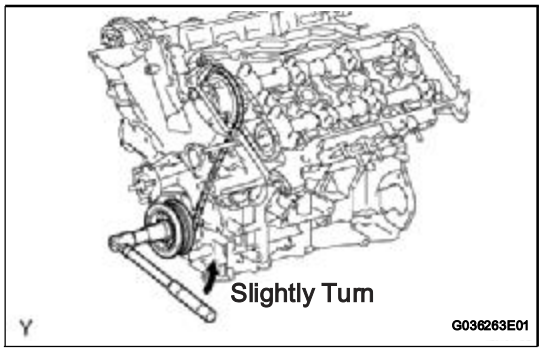

(a) Release the chain tension between the camshaft timing gear (bank 2) and crankshaft timing gear by turning the crankshaft pulley counterclockwise slightly.

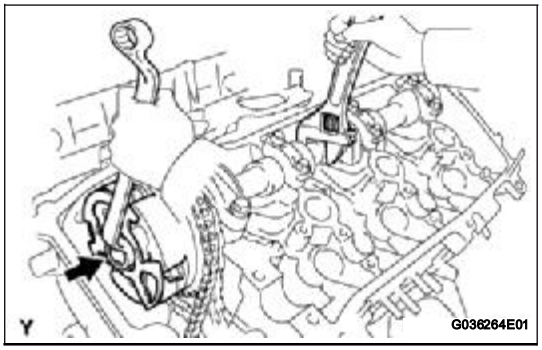

(b) Hold the hexagonal portion of the No. 3 camshaft with a wrench, then loosen the camshaft timing gear set bolt.
NOTICE:
- **Be careful not to damage the cylinder head or valve lifter with the wrench.**
- **Do not disassemble the camshaft timing gear assembly.**

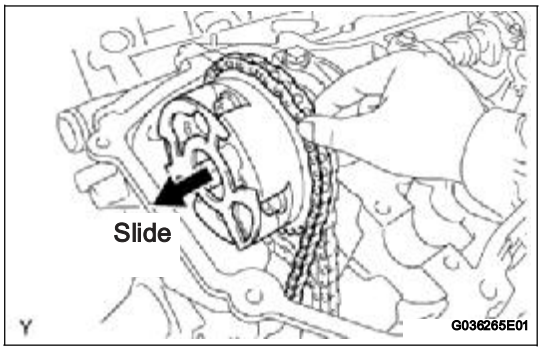

(c) Slide the camshaft timing gear and separate the No. 1 chain from the camshaft timing gear.

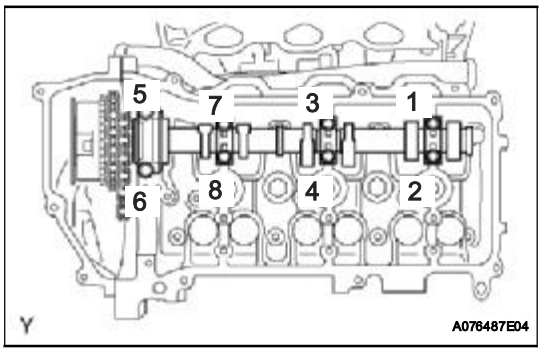

(d) Using several steps, uniformly loosen and remove the 8 bearing cap bolts in the sequence shown in the illustration.
(e) Remove the 4 bearing caps.

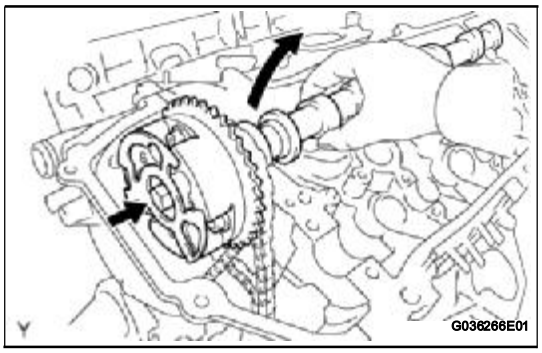

(f) Remove the camshaft timing gear set bolt with the No. 3 camshaft lifted up, then remove the No. 3 camshaft and camshaft timing gear with No. 2 chain.

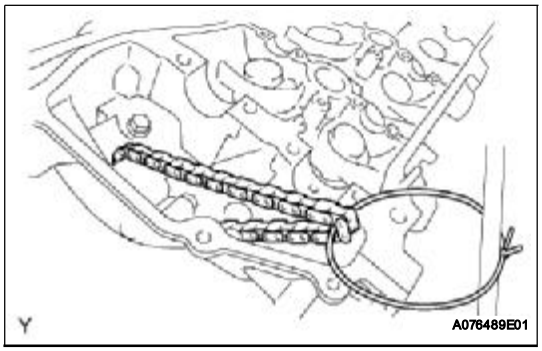

(g) Tie the No. 1 chain with a piece of string as shown in the illustration.
NOTICE:
Be careful not to drop anything inside the timing chain cover.

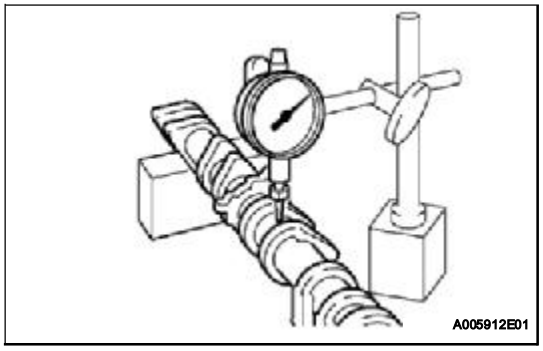

INSPECTION

1. INSPECT CAMSHAFTS

(a) Inspect the camshaft for runout.

(1) Place the camshaft on V-blocks.

(2) Using a dial indicator, measure the circle runout at the center journal.

Maximum runout:
0.06 mm (0.0024 in.)

If the circle runout is greater than the maximum, replace the camshaft.

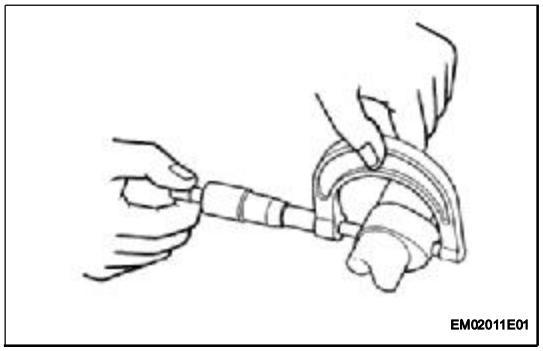

(b) Inspect the cam lobes.

(1) Using a micrometer, measure the cam lobe height.

Standard cam lobe height:
Intake:
44.168 to 44.268 mm (1.7389 to 1.7428 in.)
Exhaust:
44.580 to 44.680 mm (1.7551 to 1.7591 in.)

Minimum cam lobe height:
Intake:
44.018 mm (1.7330 in.)
Exhaust:
44.430 mm (1.7492 in.)

If the cam lobe height is less than the minimum, replace the camshaft.

(c) Inspect the camshaft journals.

(1) Using a micrometer, measure the journal diameter.

No. 1 journal diameter:
35.971 to 35.985 mm (1.4162 to 1.4167 in.)
Other journal diameters:
22.959 to 22.975 mm (0.9039 to 0.9045 in.)

If the journal diameter is not as specified, check the oil clearance.

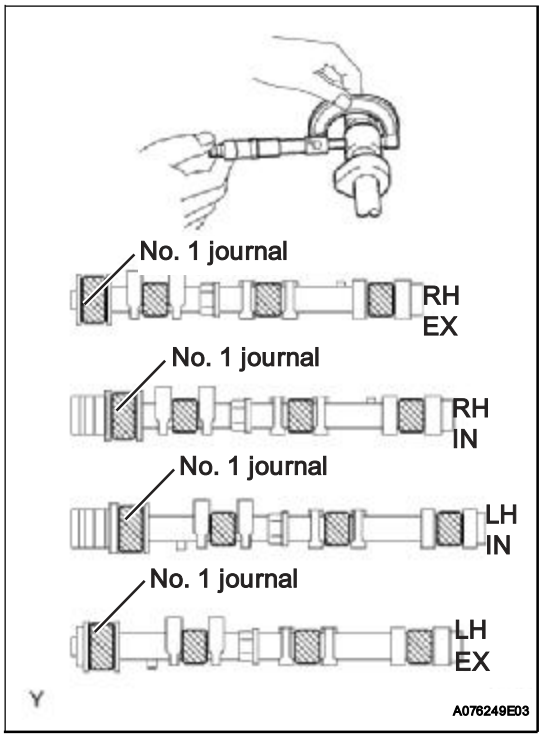

2. INSPECT CAMSHAFT TIMING GEAR ASSEMBLY

(a) Fix the intake camshaft in a vise.

NOTICE:
Be careful not to damage the camshaft.

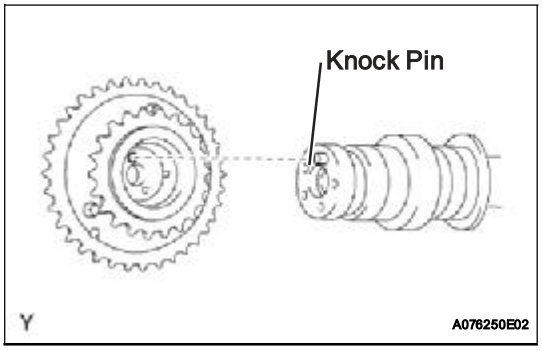

(b) Align the knock pin hole in the camshaft timing gear assembly with the knock pin of the camshaft, and install the camshaft timing gear assembly with the bolt.
Torque: 100 N*m (1,020 kgf*cm, 74 ft.*lbf)

(c) Confirm that the camshaft timing gear assembly is locked.

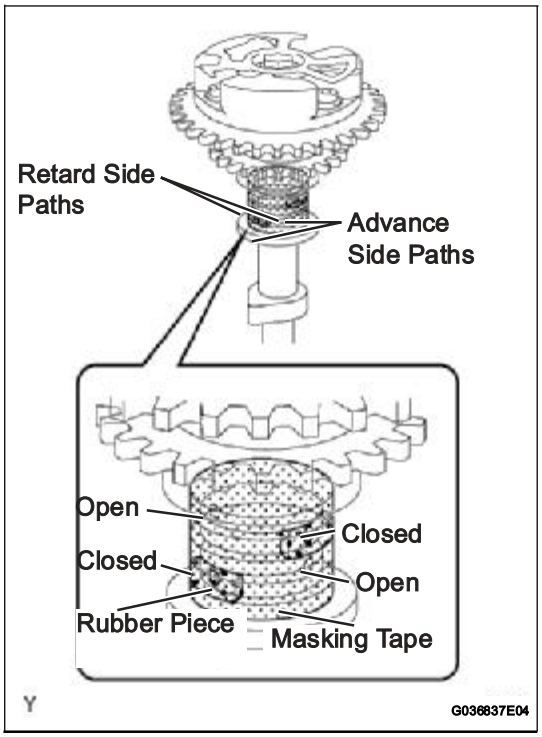

(d) Release that lock pin.
(1) Cover the 4 oil paths of the cam journal with masking tape as shown in the illustration.
HINT:
One of the 2 grooves on the cam journal is for the retard side path (upper) and the other is for the advance side path (lower). Each groove has 2 oil paths. Plug one of the oil paths for each groove with a piece of rubber before wrapping the cam journal with tape.
(2) Puncture the tape covering the advance oil path and retard oil path on the opposite side of the groove as shown in the illustration.

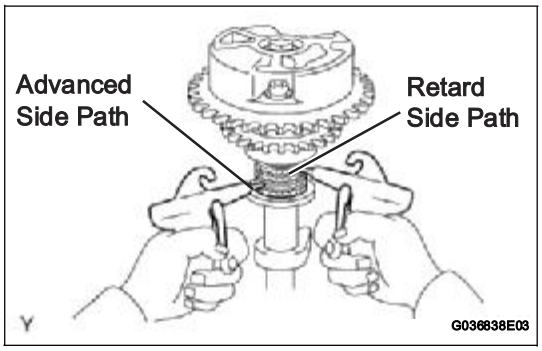

(3) Apply compressed air at 200 kPa (2.0 kgf/cm^2) into the 2 broken paths (the advance side path and the retard side path).
NOTICE:
Cover the paths with a shop rag or piece of cloth to avoid oil splashes.

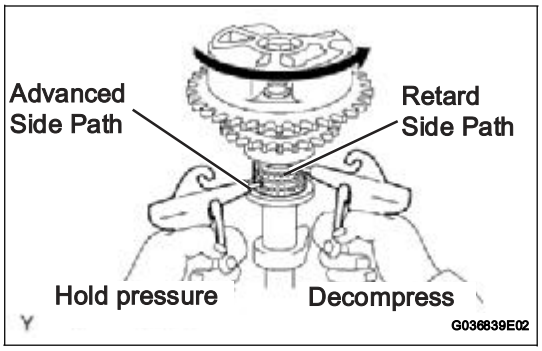

(4) Confirm that the camshaft timing gear assembly rotates in the timing advance direction when reducing the compressed air on the timing retard path.
HINT:
When the lock pin is released, the camshaft timing gear rotates in the advance direction.

(5) When the camshaft timing gear comes to the most advanced position, release the compressed air on the timing retard side path, and release that on the timing advance side path.
NOTICE:
Camshaft timing assembly gear occasionally shifts to the retard side abruptly if the air compression on the advanced side path is released first. This often causes breakage of the lock pin.

(e) Check the smooth revolution.
(1) Rotate the camshaft timing gear several times within the movable range except for the most retarded position and check it rotates smoothly.
Standard:
Moves smoothly in a range of about 31°
NOTICE:
Be sure to perform this check by hand, instead of using compressed air.

(f) Check that the lock is in the most retarded position.
(1) Confirm that the camshaft timing gear assembly is locked in the most retarded position.

(g) Remove the set bolt, then remove the camshaft timing gear assembly.
NOTICE:
Do not remove the other 3 bolts.

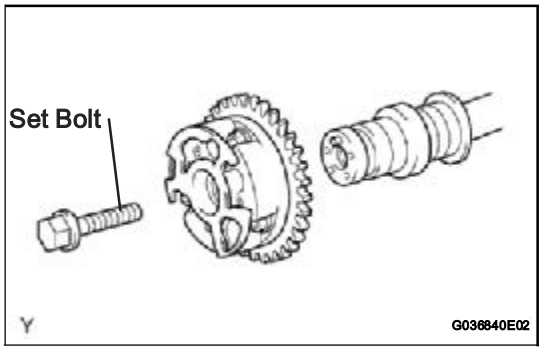

INSTALLATION

1. INSTALL NO. 3 CAMSHAFT SUB-ASSEMBLY

NOTICE:

Keep the camshaft level while it is being removed. The camshaft thrust clearance is very small and failing to keep it level could crack or damage the cylinder head journal surface, which receives the thrust force. This could subsequently lead the camshaft to seize or break. Perform the following steps to avoid such problems.

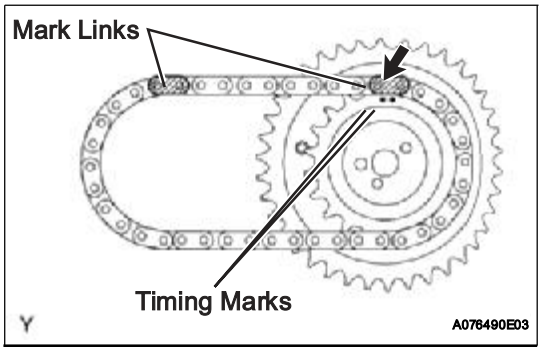

(a) Align the yellow mark link with the timing mark (2 dot marks) of the camshaft timing gear as shown in the illustration.

(b) Apply new engine oil to the thrust portion and journal of the camshafts.

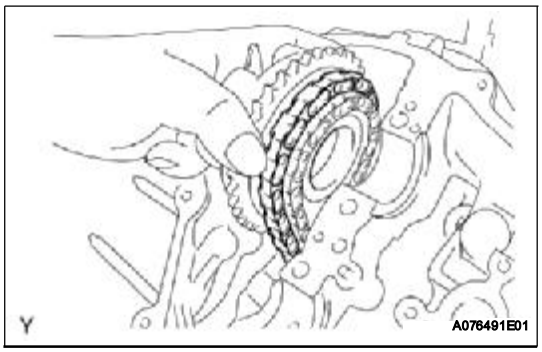

(c) Temporarily put the No. 1 chain on the No. 2 chain of the camshaft timing gear.

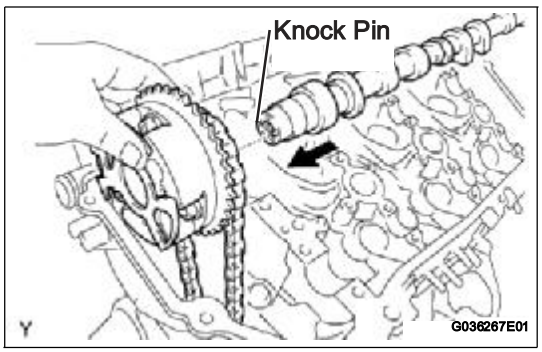

(d) Align the knock pin hole in the camshaft timing gear with the knock pin of the No. 3 camshaft, and insert the No. 3 camshaft into the camshaft timing gear.

(e) Temporarily install the camshaft timing gear set bolt.

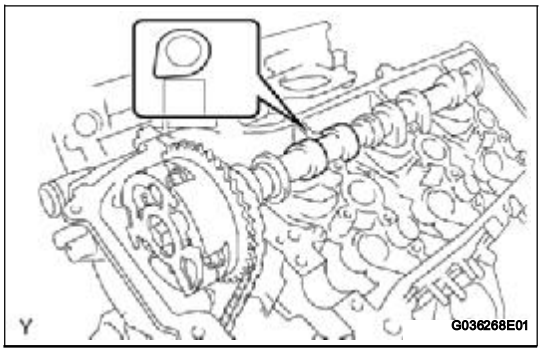

(f) Set the No. 3 camshaft onto the bank 2 cylinder head with the cam lobes of the No. 2 cylinder facing downward as shown in the illustration.

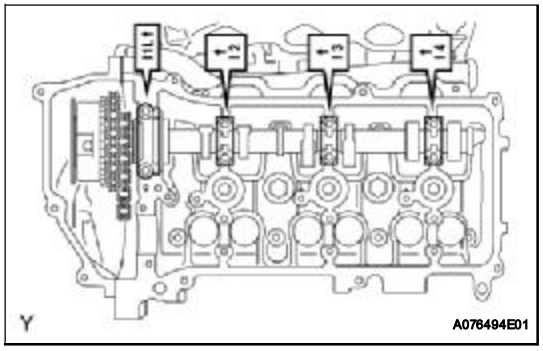

(g) Install the 4 bearing caps in the proper locations as shown.

(h) Apply a light coat of engine oil to the threads and under the heads of the bearing cap bolts.

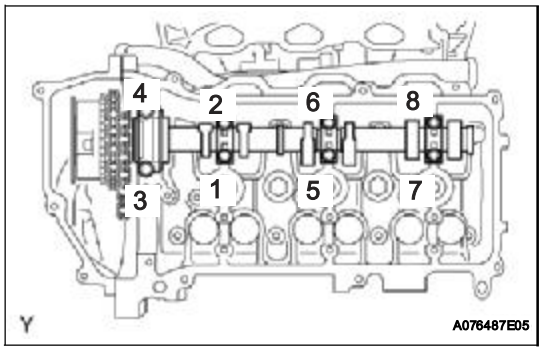

(i) Using several steps, uniformly install and tighten the 8 bearing cap bolts in the sequence shown in the illustration.

Torque: 10 mm (0.39 in.) head
9.0 N*m (92 kgf*cm, 80 in.*lbf)
12 mm (0.47 in.) head
24 N*m (245 kgf*cm, 18 ft.*lbf)

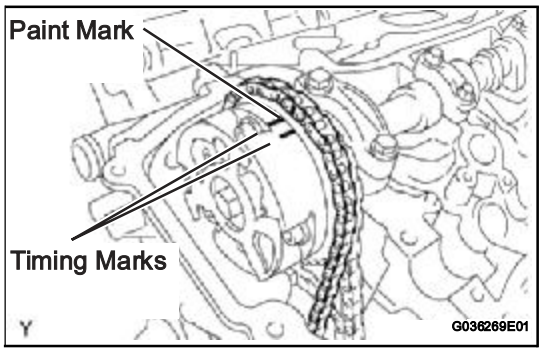

(j) Align the paint mark of the No. 1 chain with the timing marks of the camshaft timing gear.

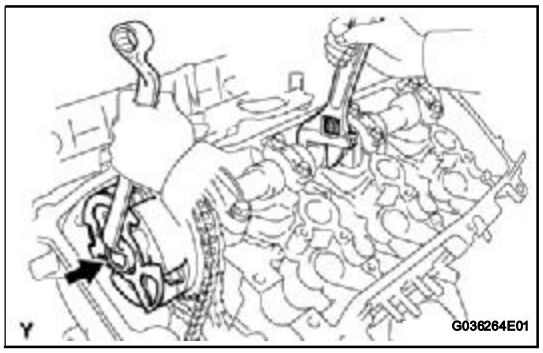

(k) Hold the hexagonal portion of the No. 3 camshaft with a wrench, and tighten the camshaft timing gear set bolt.

Torque: 100 N*m (1,020 kgf*cm, 74 ft.*lbf)

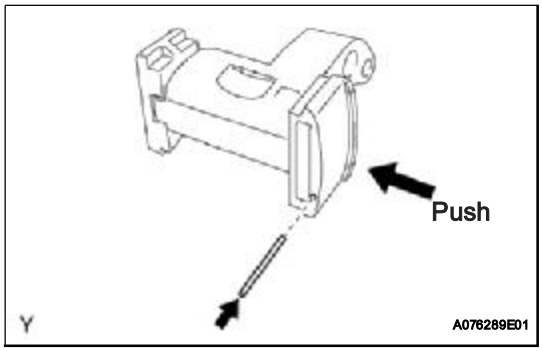

2. INSTALL NO. 3 CHAIN TENSIONER ASSEMBLY

(a) While pushing in the tensioner, insert a pin of ϕ 1.0 mm (0.039 in.) into the hole to hold it.

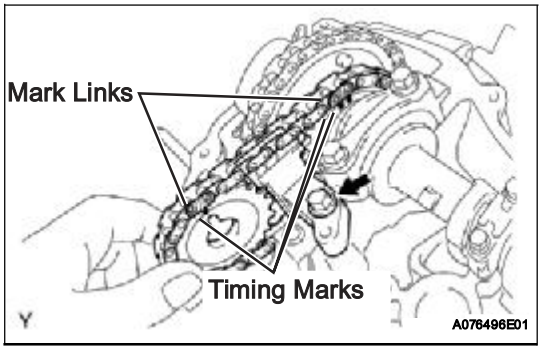

(b) Temporarily install the camshaft timing gear and No. 3 chain tensioner and align the yellow mark links with the timing marks (1 dot mark and 2 dot marks) of the camshaft timing gears.

(c) Tighten the No. 3 chain tensioner bolt.
Torque: 19 N*m (194 kgf*cm, 14 ft.*lbf)

3. INSTALL NO. 4 CAMSHAFT SUB-ASSEMBLY

NOTICE:
Keep the camshaft level while it is being removed. The camshaft thrust clearance is very small and failing to keep it level could crack or damage the cylinder head journal surface, which receives the thrust force. This could subsequently lead the camshaft to seize or break. Perform the following steps to avoid such problems.

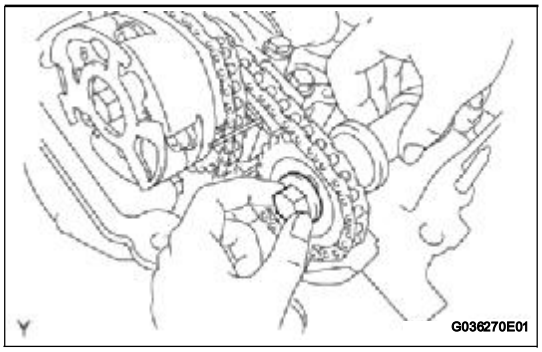

(a) Align the knock pin hole in the camshaft timing gear with the knock pin of the No. 4 camshaft, and insert the No. 4 camshaft into the camshaft timing gear.

(b) Temporarily install the camshaft timing gear set bolt.

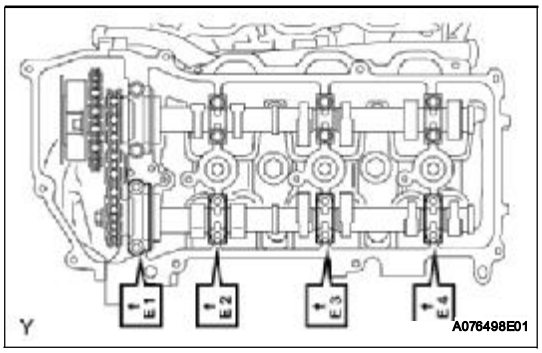

(c) Install the 4 bearing caps in the proper locations as shown.

(d) Apply a light coat of engine oil to the threads of the bearing cap bolts.

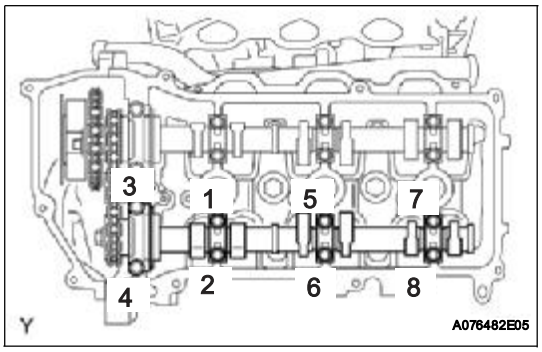

(e) Using several steps, uniformly install and tighten the 8 bearing cap bolts in the sequence shown in the illustration.
Torque: 10 mm (0.39 in.) head
9.0 N*m (92 kgf*cm, 80 in.*lbf)
12 mm (0.47 in.) head
24 N*m (245 kgf*cm, 18 ft.*lbf)

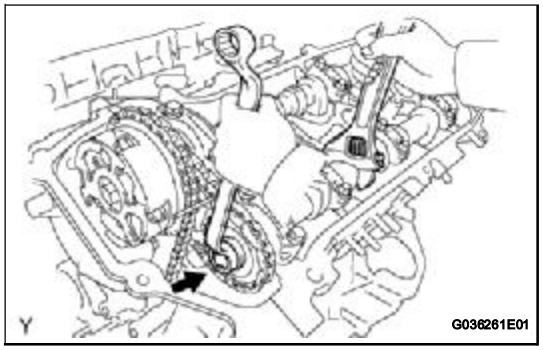

(f) Hold the hexagonal portion of the No. 4 camshaft with a wrench, and tighten the camshaft timing gear set bolt.
Torque: 100 N*m (1,020 kgf*cm, 74 ft.*lbf)

(g) Remove the pin from the No. 3 chain tensioner.

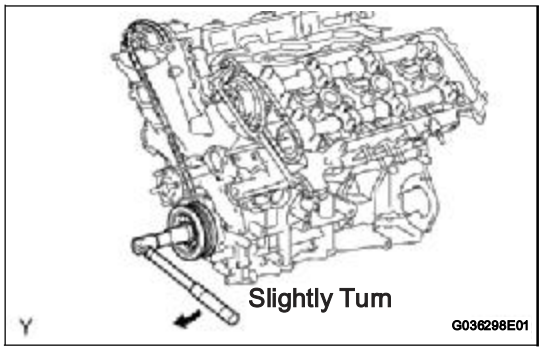

(h) Release the chain tension between the camshaft timing gear (bank 1) and crankshaft timing gear by turning the crankshaft pulley clockwise slightly.

4. INSTALL CAMSHAFT

NOTICE:

Keep the camshaft level while it is being removed. The camshaft thrust clearance is very small and failing to keep it level could crack or damage the cylinder head journal surface, which receives the thrust force. This could subsequently lead the camshaft to seize or break. Perform the following steps to avoid such problems.

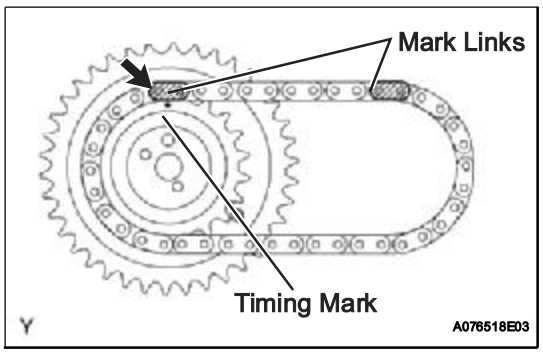

(a) Align the yellow mark link with the timing mark (1 dot mark) of the camshaft timing gear as shown in the illustration.

(b) Apply new engine oil to the thrust portion and journal of the camshafts.

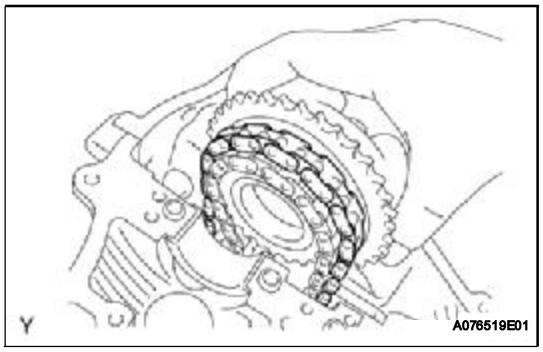

(c) Temporarily install the No. 1 chain onto the No. 2 chain of the camshaft timing gear.

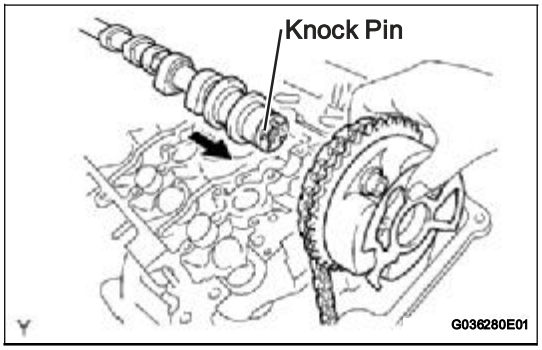

(d) Align the knock pin hole in the camshaft timing gear with the knock pin of the No. 1 camshaft, and insert the No. 1 camshaft into the camshaft timing gear.
(e) Temporarily install the camshaft timing gear set bolt.

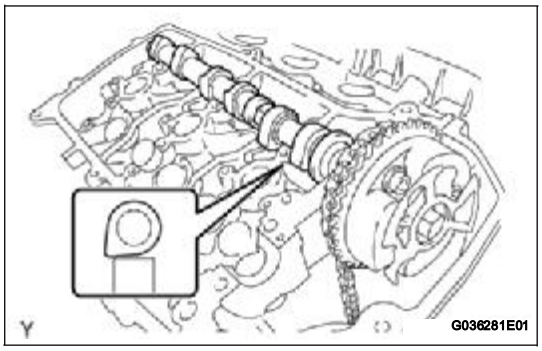

(f) Install the No. 1 camshaft onto the bank 1 cylinder head with the cam lobes of the No. 1 cylinder facing downward as shown in the illustration.

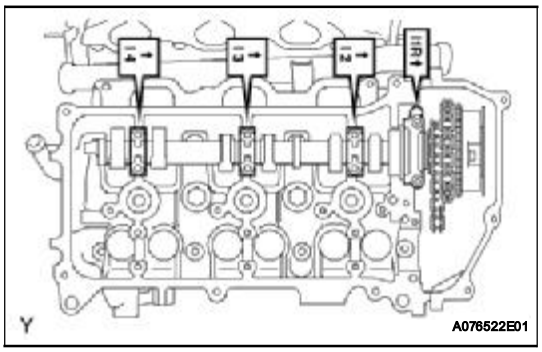

(g) Install the 4 bearing caps in the proper locations as shown.
(h) Apply a light coat of engine oil to the threads and under the heads of the bearing cap bolts.

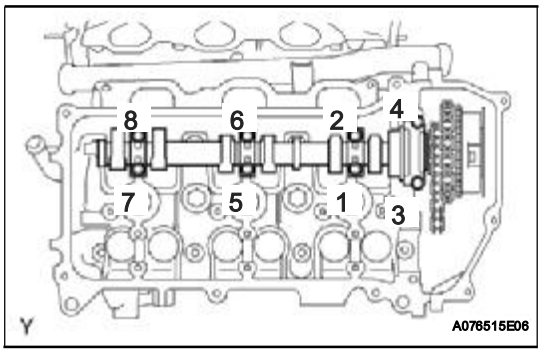

(i) Using several steps, uniformly install and tighten the 8 bearing cap bolts in the sequence shown in the illustration.
Torque: 10 mm (0.39 in.) head
9.0 N*m (92 kgf*cm, 80 in.*lbf)
12 mm (0.47 in.) head
24 N*m (245 kgf*cm, 18 ft.*lbf)

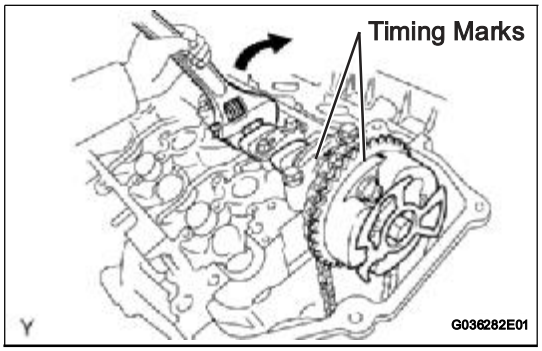

(j) Rotate the No. 1 camshaft clockwise using a wrench so that the timing mark of the camshaft timing gear is aligned with the timing mark of the camshaft bearing cap.

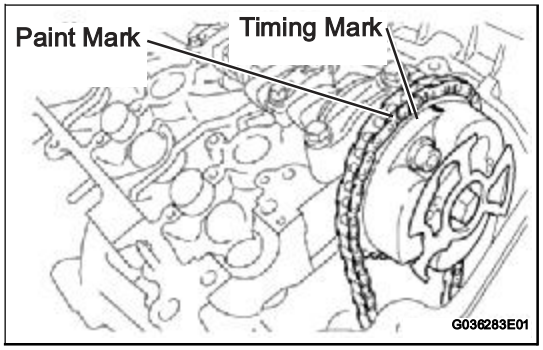

(k) Align the paint mark of the No. 1 chain with the timing mark of the camshaft timing gear.

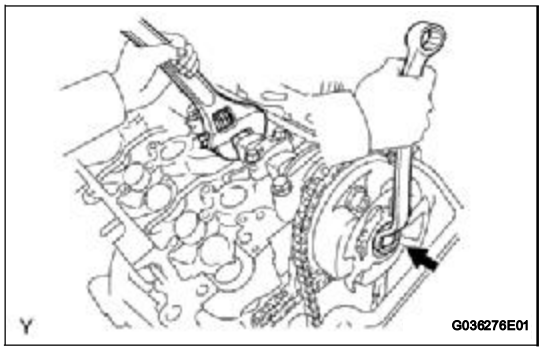

(l) Hold the hexagonal portion of the No. 1 camshaft with a wrench, and tighten the camshaft timing gear set bolt.
Torque: 100 N*m (1,020 kgf*cm, 74 ft.*lbf)

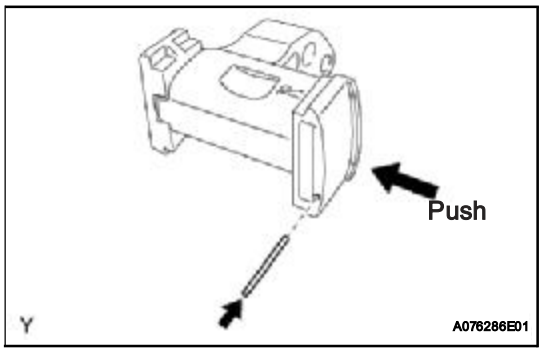

5. INSTALL NO. 2 CHAIN TENSIONER ASSEMBLY

(a) While pushing in the tensioner, insert a pin of ϕ 1.0 mm (0.039 in.) into the hole to fix it.

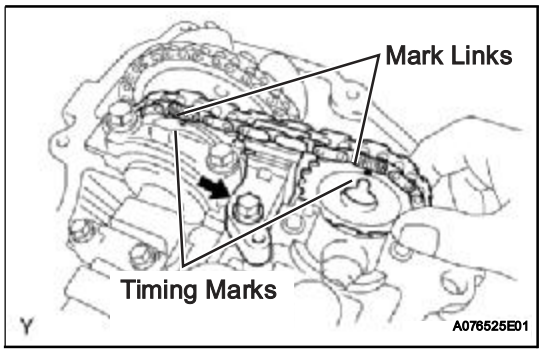

(b) Temporarily install the camshaft timing gear and No. 2 chain tensioner and align the yellow mark links with the timing marks (1 dot mark) of the camshaft timing gears.

(c) Tighten the No. 2 chain tensioner bolt.
Torque: 19 N*m (194 kgf*cm, 14 ft.*lbf)

6. INSTALL NO. 2 CAMSHAFT

NOTICE:

Keep the camshaft level while it is being removed. The camshaft thrust clearance is very small and failing to keep it level could crack or damage the cylinder head journal surface, which receives the thrust force. This could subsequently lead the camshaft to seize or break. Perform the following steps to avoid such problems.

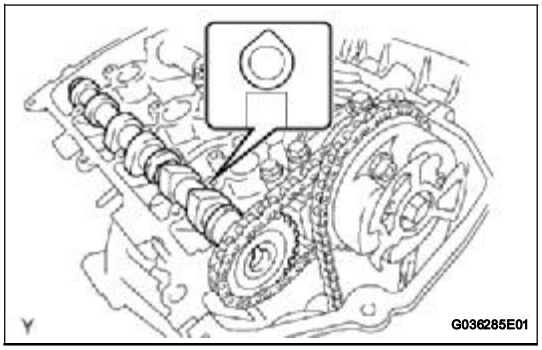

(a) Install the No. 2 camshaft onto the bank 1 cylinder head with the cam lobes of No. 1 cylinder facing upward as shown in the illustration.

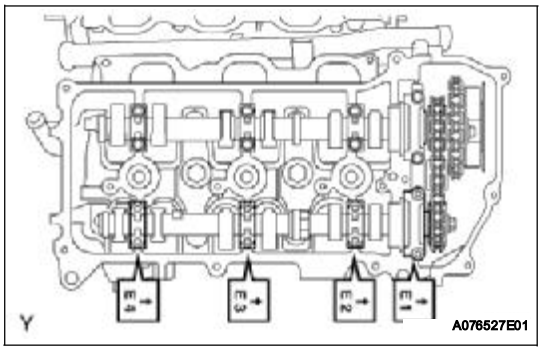

(b) Install the 4 bearing caps in the proper locations as shown.
(c) Apply a light coat of engine oil to the threads and under the heads of the bearing cap bolts.

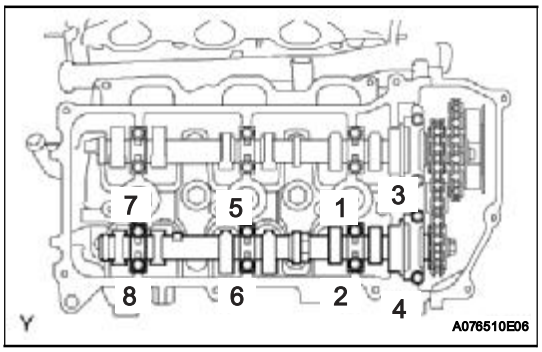

(d) Using several steps, uniformly install and tighten the 8 bearing cap bolts in the sequence shown in the illustration.
Torque: 10 mm (0.39 in.) head
9.0 N*m (92 kgf*cm, 80 in.*lbf)
12 mm (0.47 in.) head
24 N*m (245 kgf*cm, 18 ft.*lbf)

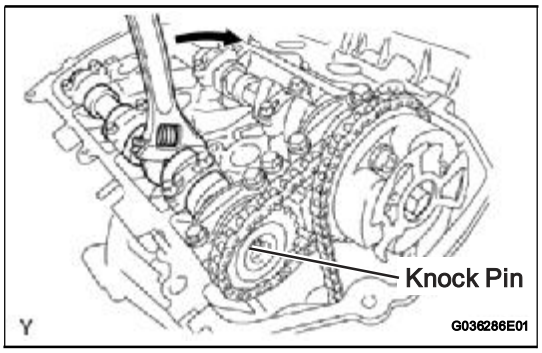

(e) Rotate the No. 2 camshaft clockwise using a wrench so that the knock pin of the No. 2 camshaft is aligned with the knock pin hole in the camshaft timing gear.

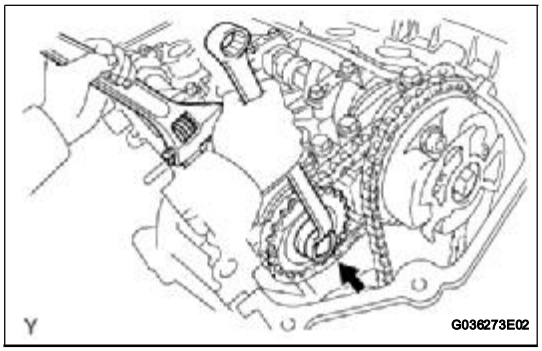

(f) Hold the hexagonal portion of the No. 2 camshaft with a wrench, and install the camshaft timing gear set bolt.
Torque: 100 N*m (1,020 kgf*cm, 74 ft.*lbf)
(g) Remove the pin from the No. 2 chain tensioner.

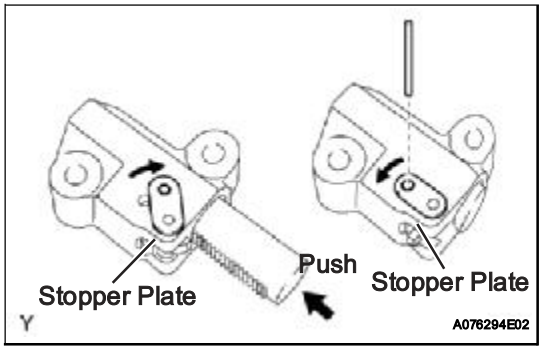

7. INSTALL NO. 1 CHAIN TENSIONER ASSEMBLY

(a) While turning the stopper plate of the No. 1 chain tensioner clockwise, push in the plunger of the No. 1 chain tensioner as shown in the illustration.

(b) While turning the stopper plate of the tensioner counterclockwise, insert a bar of ϕ 3.5 mm (0.138 in.) into the holes in the stopper plate and No. 1 chain tensioner to fix the stopper plate.

(c) Install the No. 1 chain tensioner with the 2 bolts.
Torque: 10 N*m (102 kgf*cm, 7.4 ft.*lbf)

(d) Remove the bar from the No. 1 chain tensioner.

(e) Install a new gasket and the timing chain cover plate with the 4 bolts.
Torque: 9.0 N*m (92 kgf*cm, 80 in.*lbf)

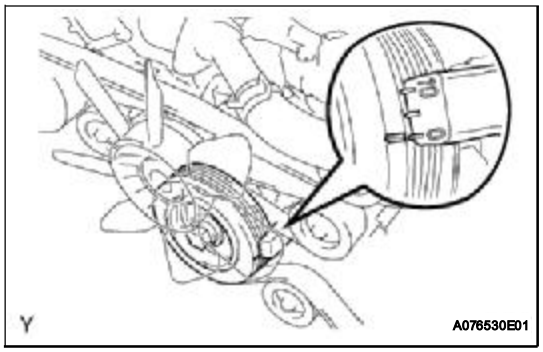

(f) Turn the crankshaft pulley 2 complete revolutions slowly until its groove and the "0" timing mark of the timing chain cover are aligned.

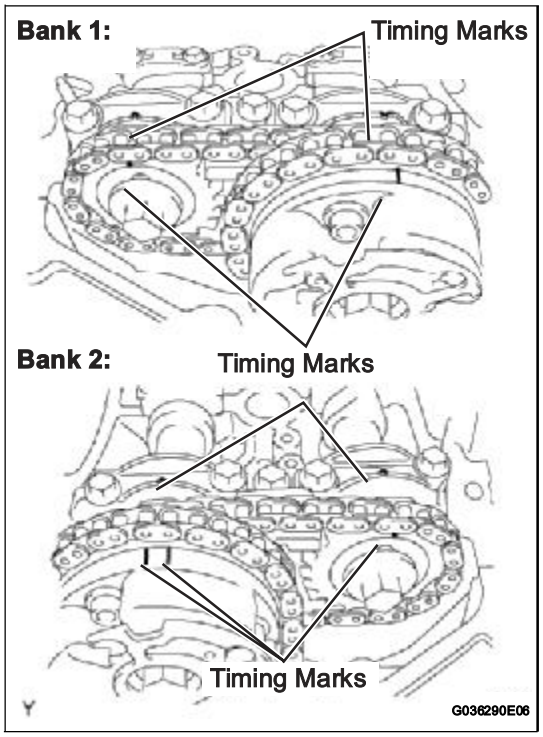

(g) Check that the timing marks of the camshaft timing gears are aligned with the timing marks of the bearing cap as shown in the illustration.

8. SET CYLINDER TO TDC/COMPRESSION (See page EM-8)

9. INSPECT VALVE CLEARANCE (See page EM-9)

10. ADJUST VALVE CLEARANCE (See page EM-10)

11. INSTALL CYLINDER HEAD COVER SUB-ASSEMBLY LH

(a) Remove any old packing (FIPG) material.
HINT:
Do not drop any oil on the contact surfaces of the cylinder head, timing chain cover and cylinder head cover.

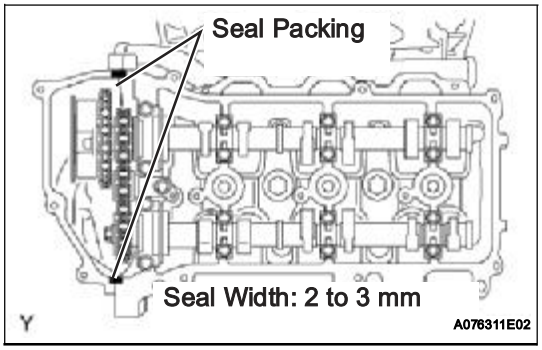

(b) Apply a continuous bead of seal packing (diameter 2 to 3 mm (0.08 to 0.12 in.)) to the cylinder head and timing chain cover as shown in the illustration.
Seal packing:
Toyota Genuine Seal Packing Black, Three Bond 1207B or the equivalent
NOTICE:
Install the cylinder head cover within 3 minutes of applying the seal packing. Tighten the cylinder head cover bolts and nuts within 15 minutes of installing the cylinder head cover. Otherwise, the seal packing must be removed and reapplied.

(c) Install the seal washers onto the bolts.

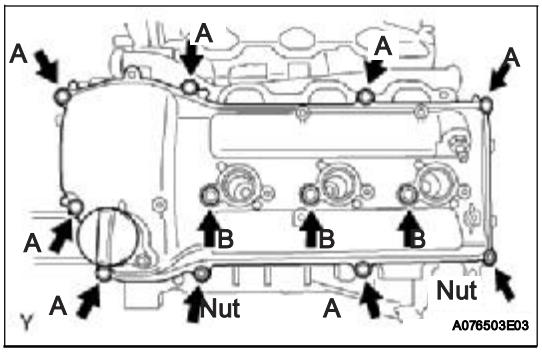

(d) Install the cylinder head cover with the 10 bolts and 2 nuts. Tighten the bolts and nuts uniformly in several steps.
Torque: Bolt A
10 N*m (102 kgf*cm, 7.4 ft.*lbf)
Bolt B
9.0 N*m (92 kgf*cm, 80 in.*lbf)
Nut
9.0 N*m (92 kgf*cm, 80 in.*lbf)
HINT:
Each bolt length is as follows.

Bolt	Length
A	25 mm (0.98 in.)
B	60 mm (2.36 in.)

12. INSTALL CYLINDER HEAD COVER SUB-ASSEMBLY

(a) Remove any old packing (FIPG) material.
HINT:
Do not drop any oil on the contact surfaces of the cylinder head, timing chain cover and cylinder head cover.

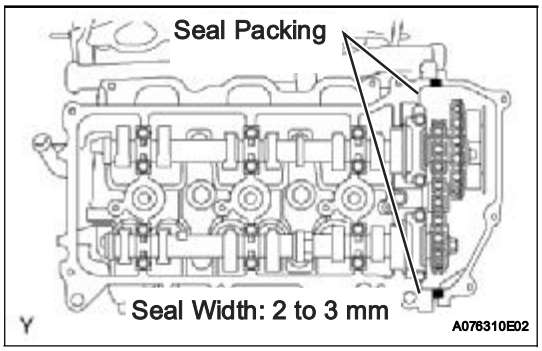

(b) Apply a continuous bead of seal packing (diameter 2 to 3 mm (0.08 to 0.12 in.)) to the cylinder head and timing chain cover as shown in the illustration.
Seal packing:
Toyota Genuine Seal Packing Black, Three Bond 1207B or the equivalent
NOTICE:
Install the cylinder head cover within 3 minutes of applying the seal packing. Tighten the cylinder head cover bolts and nuts within 15 minutes of installing the cylinder head cover. Otherwise, the seal packing must be removed and reapplied.

(c) Install the seal washers onto the bolts.

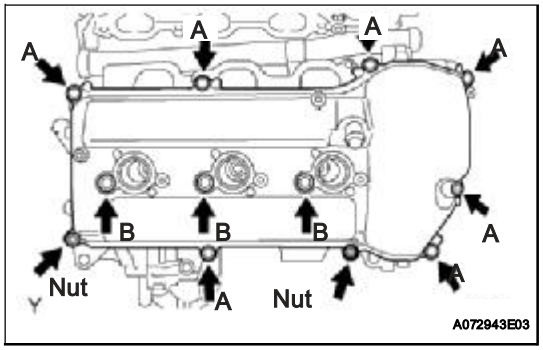

(d) Install the cylinder head cover with the 10 bolts and 2 nuts. Tighten the bolts and nuts uniformly in several steps.

Torque: Bolt A
10 N*m (102 kgf*cm, 7.4 ft.*lbf)
Bolt B
9.0 N*m (92 kgf*cm, 80 in.*lbf)
Nut
9.0 N*m (92 kgf*cm, 80 in.*lbf)

HINT:
Each bolt length is as follows.

Bolt	Length
A	25 mm (0.98 in.)
B	60 mm (2.36 in.)

13. **INSTALL IGNITION COIL ASSEMBLY (See page IG-8)**
14. **INSTALL INTAKE AIR SURGE TANK (See page FU-17)**
15. **INSTALL NO. 2 SURGE TANK STAY (See page FU-19)**
16. **INSTALL NO. 1 SURGE TANK STAY (See page FU-19)**
17. **INSTALL OIL BAFFLE PLATE (See page FU-19)**
18. **INSTALL THROTTLE BODY BRACKET (See page FU-19)**
19. **INSTALL AIR CLEANER ASSEMBLY (See page ES-431)**
20. **CONNECT CABLE TO NEGATIVE BATTERY TERMINAL**
    Torque: 3.9 N*m (40 kgf*cm, 35 in.*lbf)
21. **ADD ENGINE COOLANT (See page CO-3)**
22. **CHECK FOR ENGINE COOLANT LEAKAGE (See page CO-4)**
23. **CHECK FOR ENGINE OIL LEAKAGE**
24. **INSPECT IGNITION TIMING (See page EM-1)**
25. **INSTALL V-BANK COVER (See page ES-431)**

CYLINDER HEAD

COMPONENTS

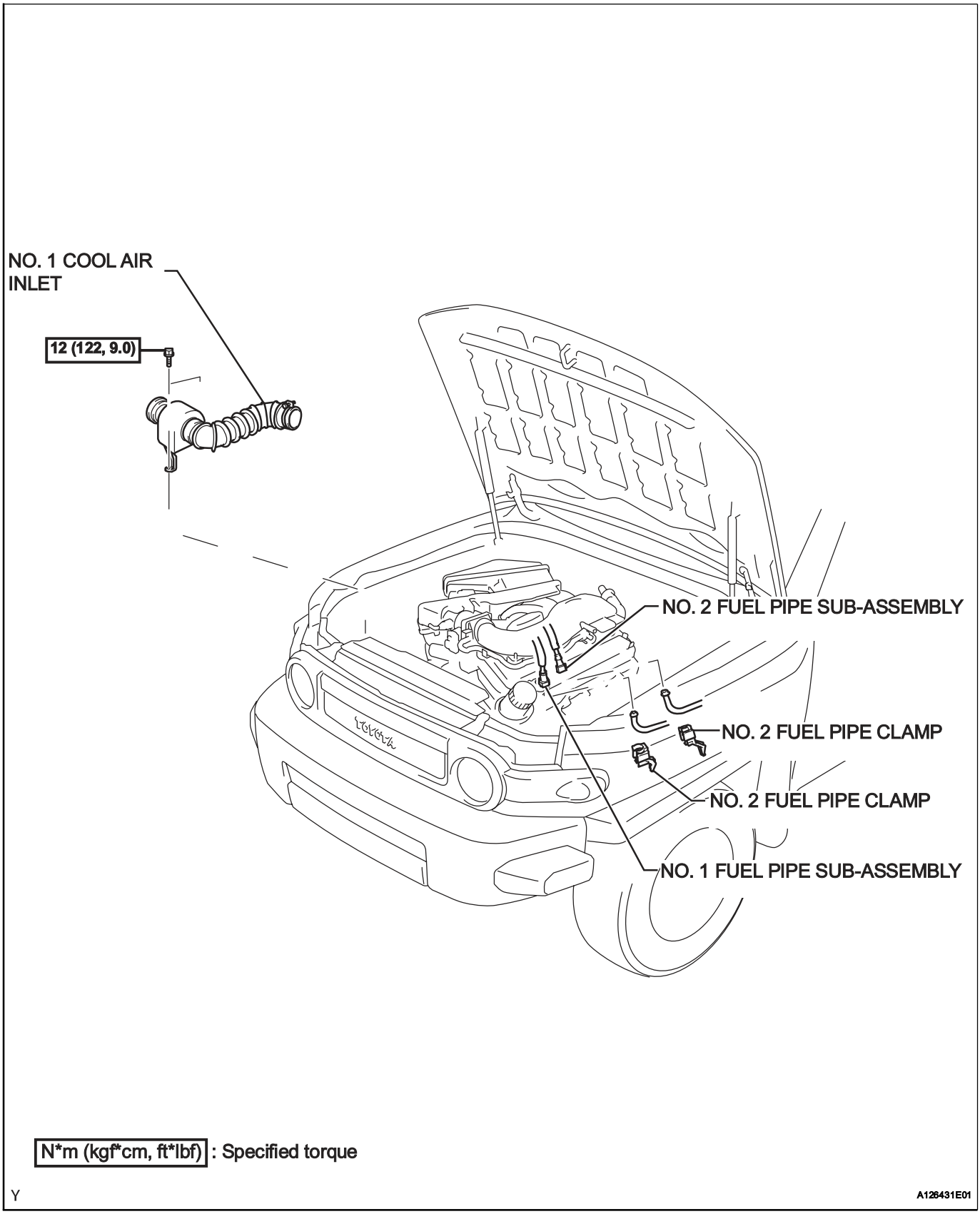

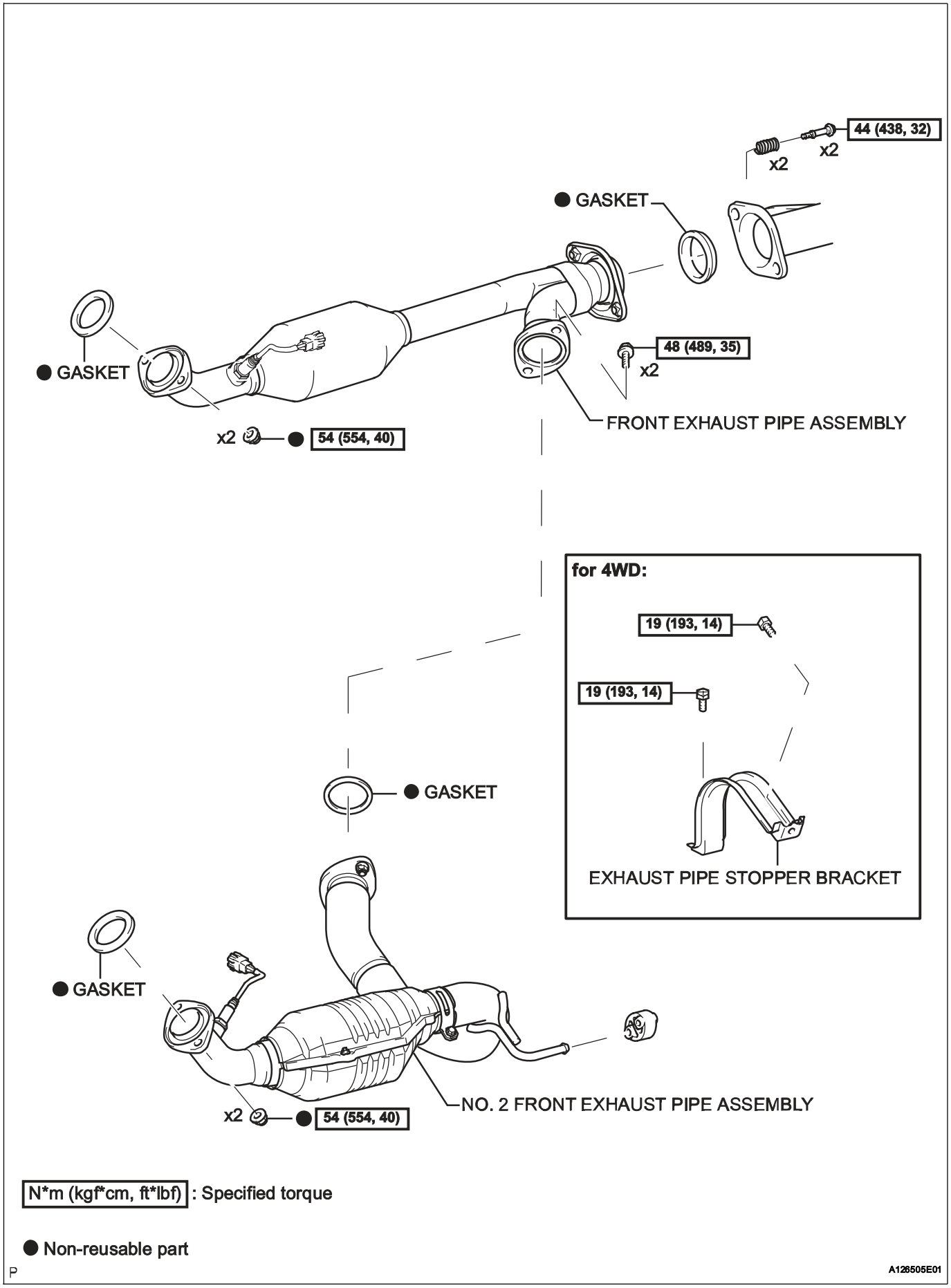
44 (438, 32)
x2
x2
GASKET
GASKET
48 (489, 35)
x2
FRONT EXHAUST PIPE ASSEMBLY
x2
54 (554, 40)
for 4WD:
19 (193, 14)
19 (193, 14)
EXHAUST PIPE STOPPER BRACKET
GASKET
GASKET
NO. 2 FRONT EXHAUST PIPE ASSEMBLY
x2
54 (554, 40)
N*m (kgf*cm, ft*lbf) : Specified torque
Non-reusable part
P
A126505E01

EM

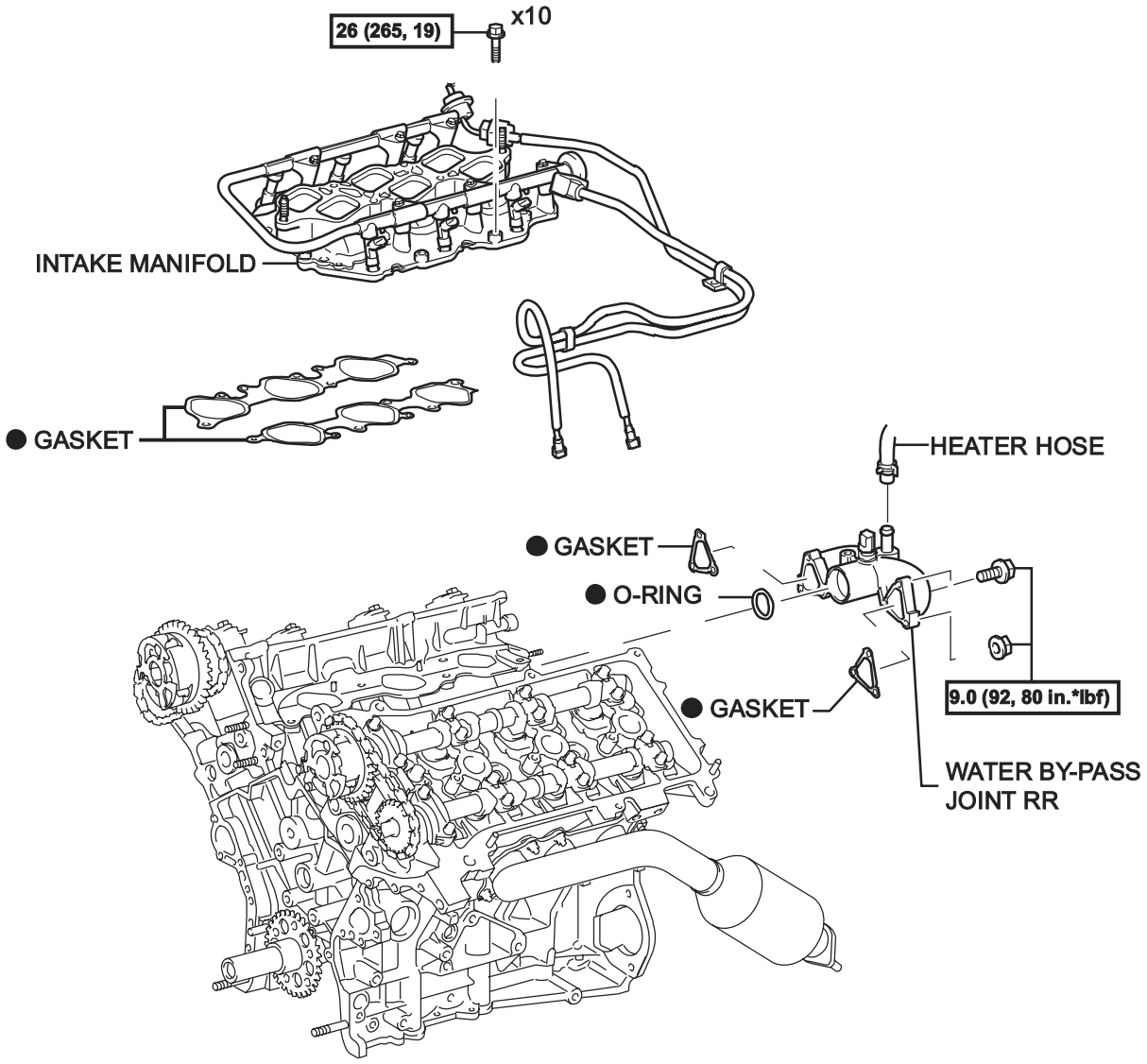

N*m (kgf*cm, ft*lbf) : Specified torque

● Non-reusable part

Y

A126432E01

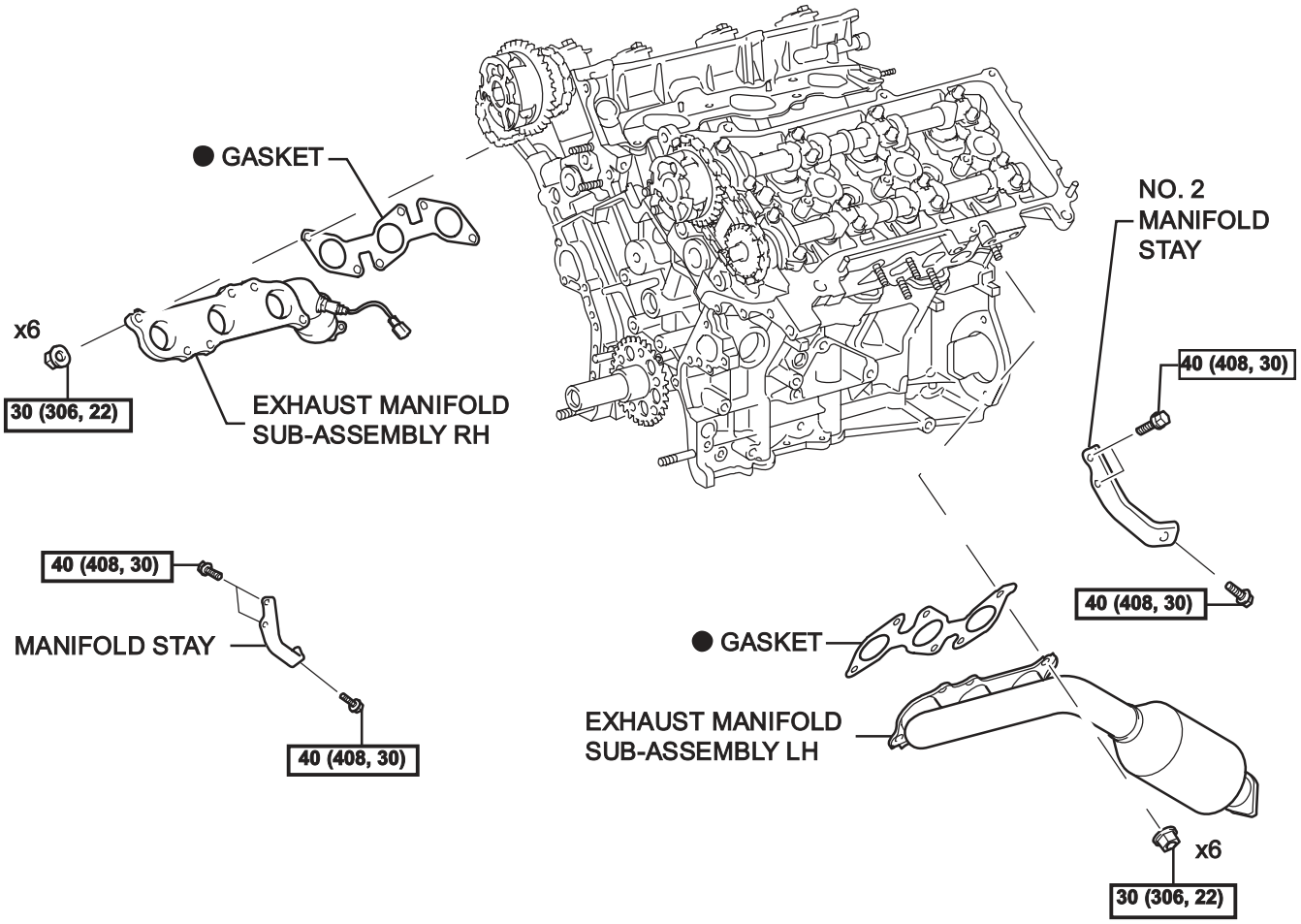

N*m (kgf*cm, ft*lbf) : Specified torque

● Non-reusable part

Y

A126433E01

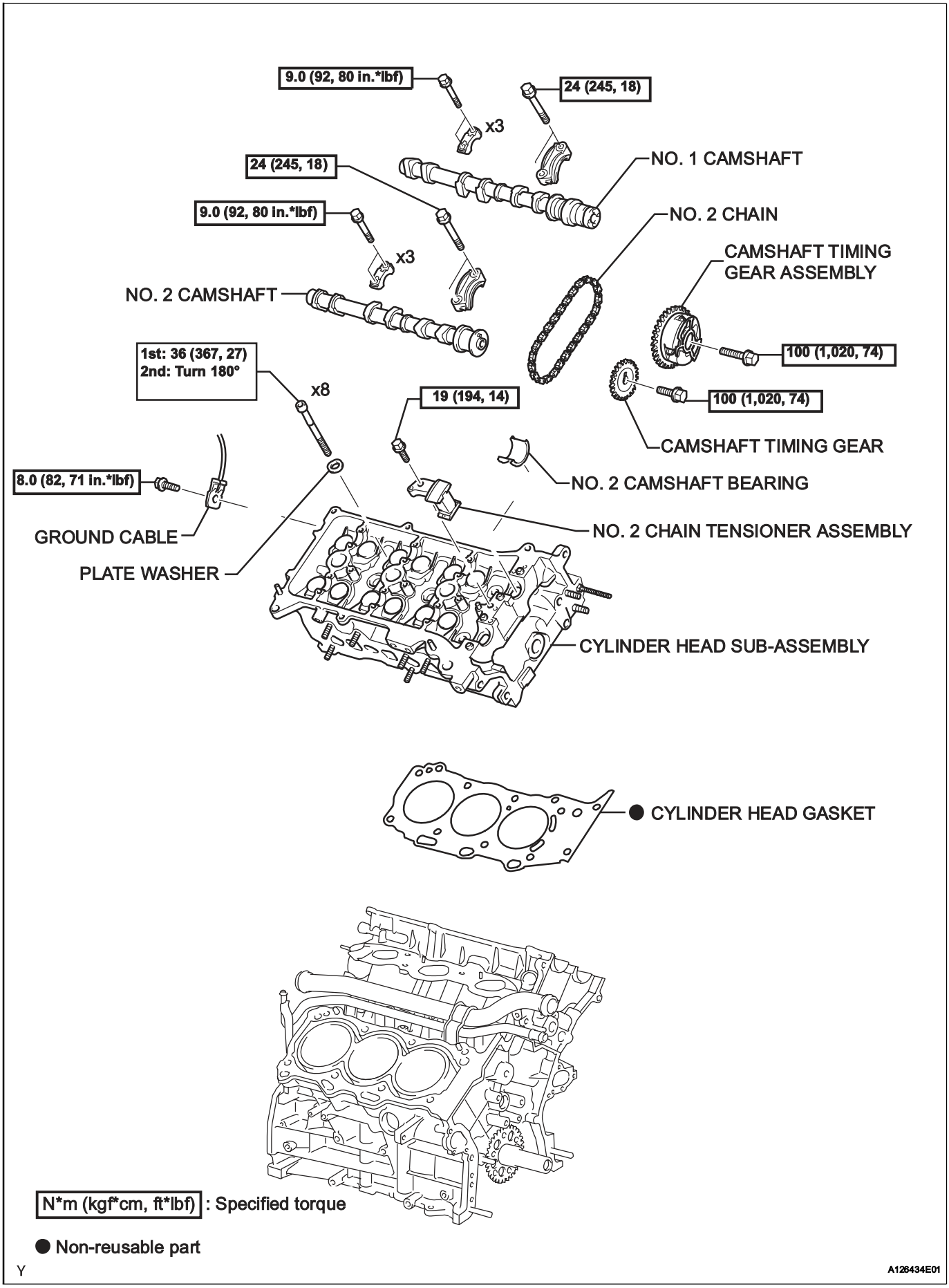
9.0 (92, 80 in.*lbf)
x3
24 (245, 18)
NO. 1 CAMSHAFT
24 (245, 18)
9.0 (92, 80 in.*lbf)
x3
NO. 2 CHAIN
CAMSHAFT TIMING GEAR ASSEMBLY
NO. 2 CAMSHAFT
100 (1,020, 74)
1st: 36 (367, 27)
2nd: Turn 180°
x8
19 (194, 14)
100 (1,020, 74)
CAMSHAFT TIMING GEAR
8.0 (82, 71 in.*lbf)
NO. 2 CAMSHAFT BEARING
GROUND CABLE
NO. 2 CHAIN TENSIONER ASSEMBLY
PLATE WASHER
CYLINDER HEAD SUB-ASSEMBLY
● CYLINDER HEAD GASKET
N*m (kgf*cm, ft*lbf) : Specified torque
● Non-reusable part
Y
A126434E01

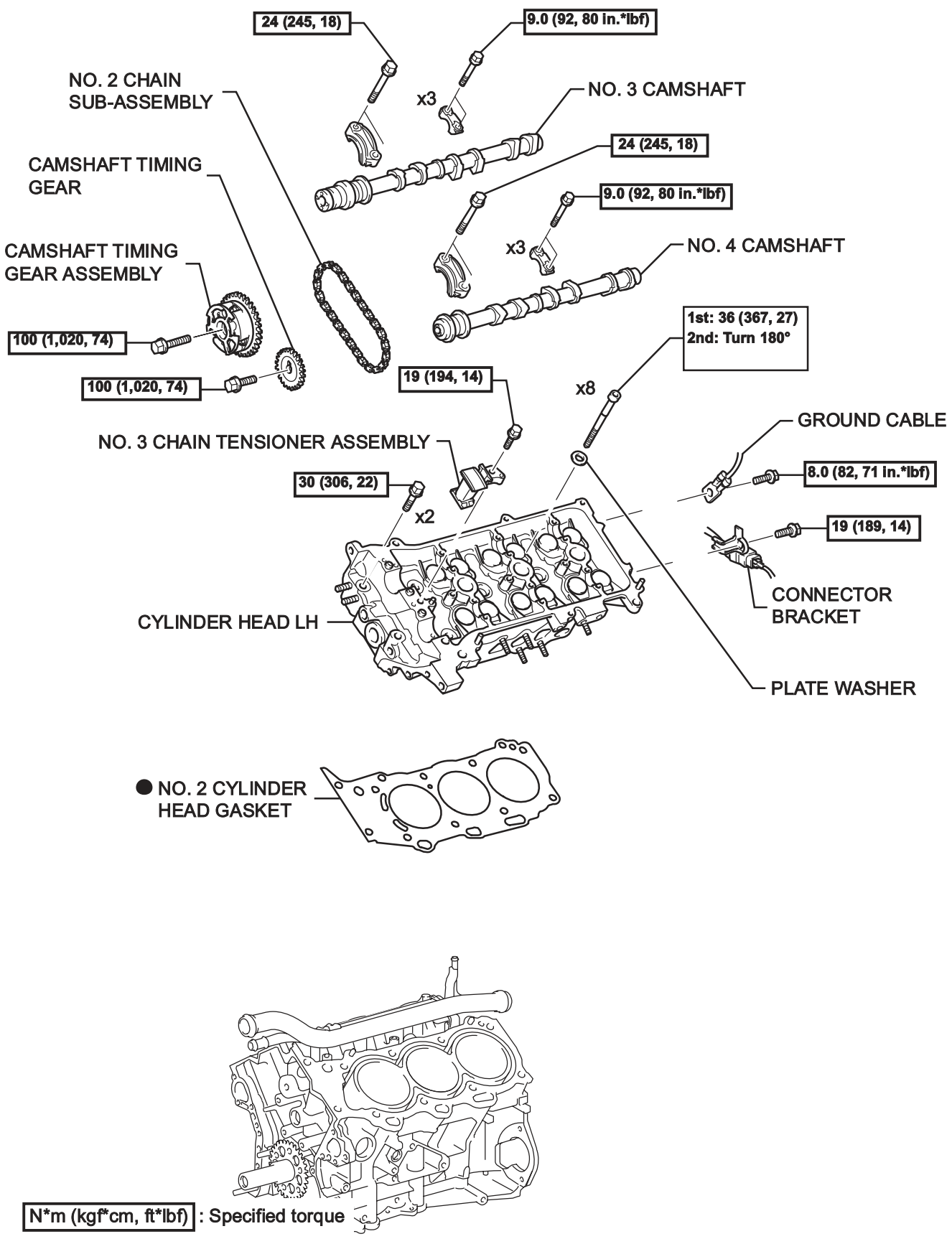
24 (245, 18)
9.0 (92, 80 in.*lbf)
NO. 2 CHAIN SUB-ASSEMBLY
x3
NO. 3 CAMSHAFT
24 (245, 18)
CAMSHAFT TIMING GEAR
9.0 (92, 80 in.*lbf)
x3
NO. 4 CAMSHAFT
CAMSHAFT TIMING GEAR ASSEMBLY
1st: 36 (367, 27)
2nd: Turn 180°
100 (1,020, 74)
100 (1,020, 74)
19 (194, 14)
x8
GROUND CABLE
NO. 3 CHAIN TENSIONER ASSEMBLY
8.0 (82, 71 in.*lbf)
30 (306, 22)
x2
19 (189, 14)
CONNECTOR BRACKET
CYLINDER HEAD LH
PLATE WASHER
● NO. 2 CYLINDER HEAD GASKET
N*m (kgf*cm, ft*lbf) : Specified torque
● Non-reusable part
Y
A126435E01

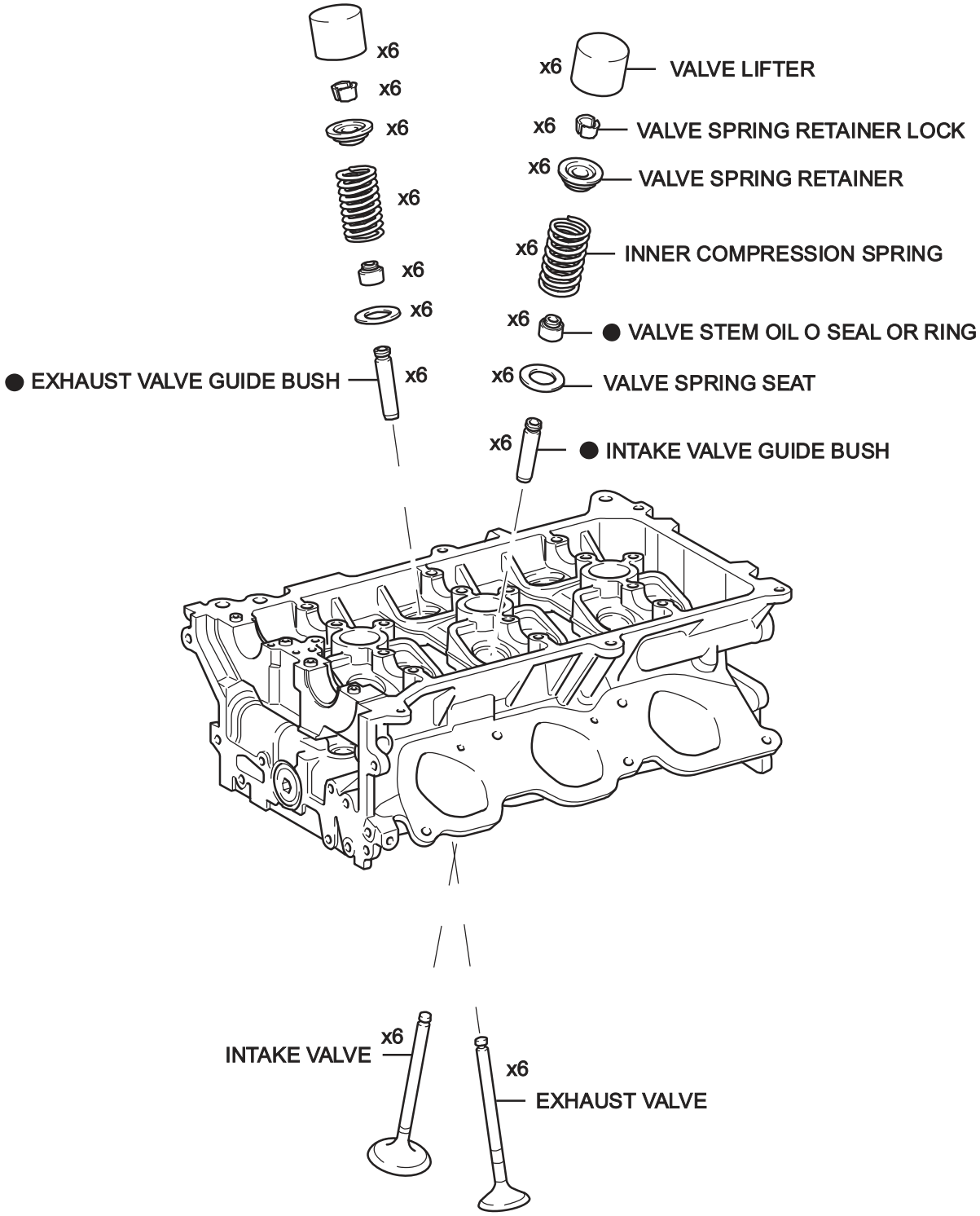

● Non-reusable part

A126376E01

REMOVAL

1. **DISCHARGE FUEL SYSTEM PRESSURE**
   (See page FU-1)

2. **REMOVE CHAIN SUB-ASSEMBLY**
   Refer to the procedures up to "REMOVE CHAIN SUB-ASSEMBLY" (See page EM-22).

3. **REMOVE NO. 1 COOL AIR INLET**
   (a) Remove the 2 bolts and the No. 1 cool air inlet.

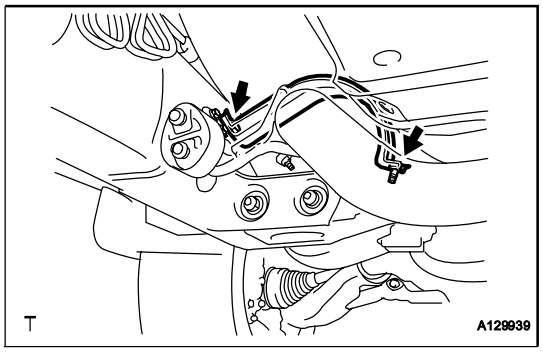

4. **REMOVE EXHAUST PIPE STOPPER BRACKET (for 4WD)**
   (a) Remove the 2 bolts, then remove the exhaust pipe stopper bracket.

5. **REMOVE NO. 2 FRONT EXHAUST PIPE ASSEMBLY**

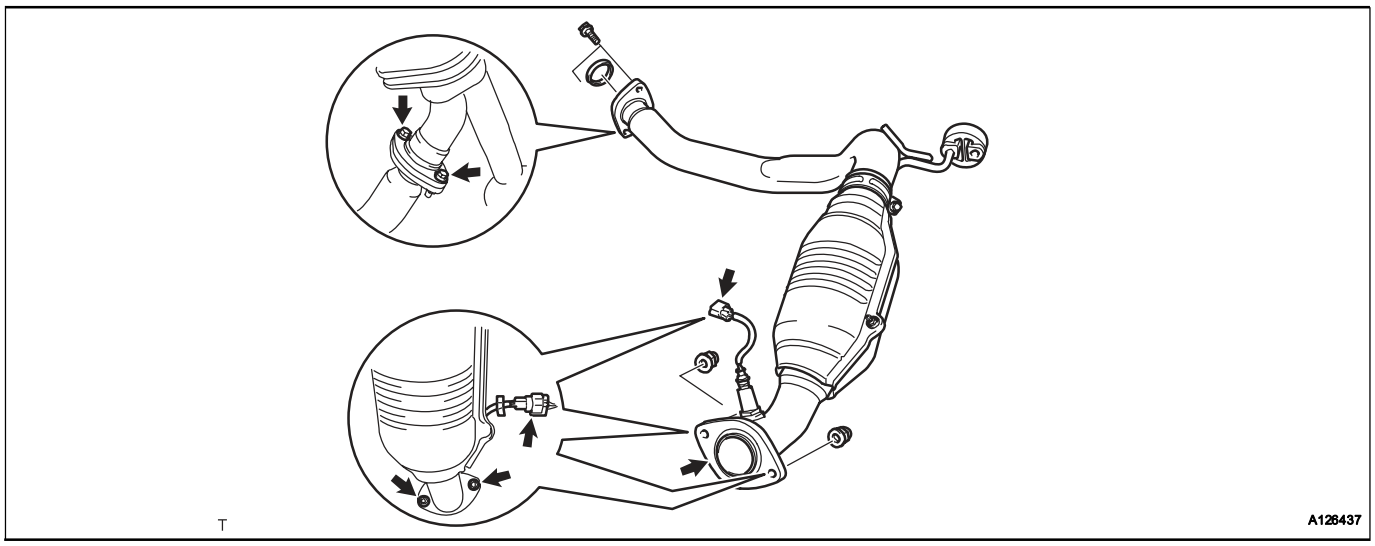

   (a) Disconnect the oxygen sensor connector.
   (b) Remove the 2 bolts and 2 nuts.
   (c) Disengage the support and remove the front exhaust pipe and 2 gaskets.

6. REMOVE FRONT EXHAUST PIPE ASSEMBLY

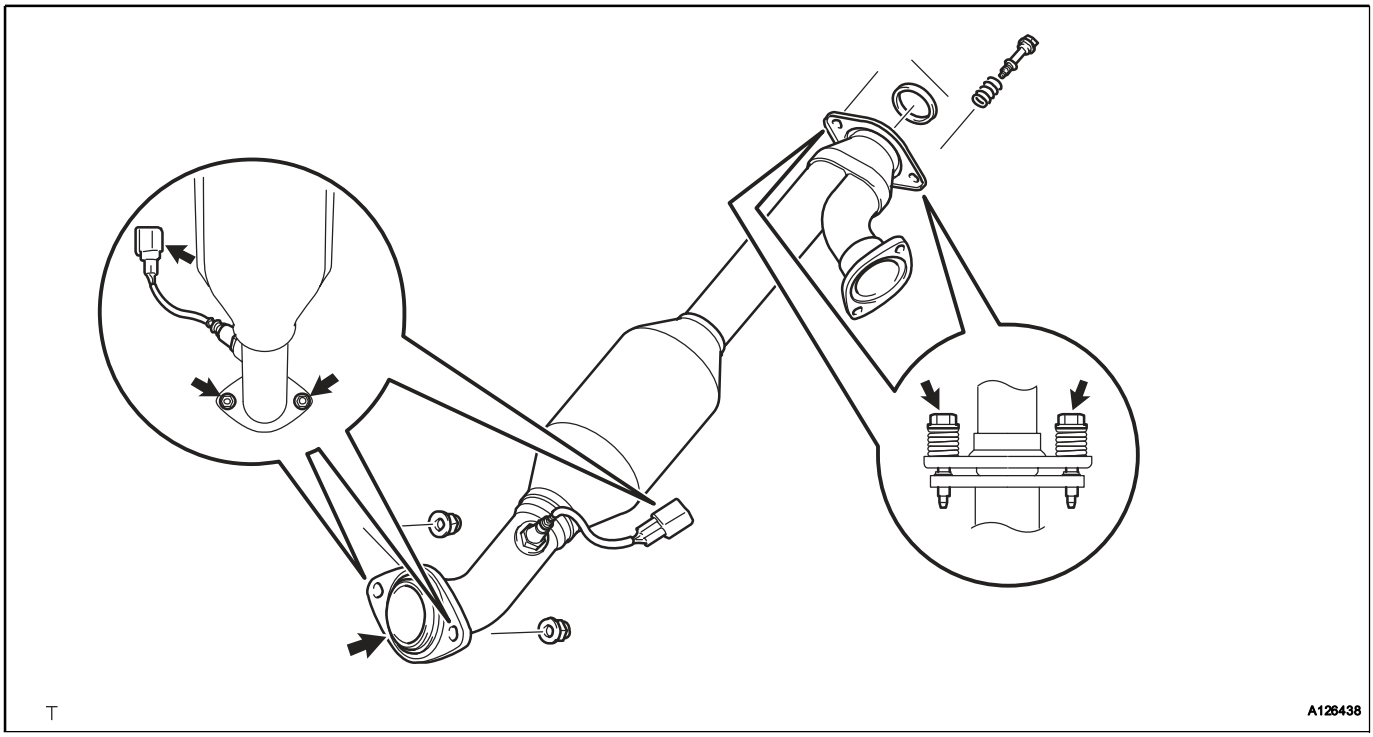

(a) Disconnect the oxygen sensor connector.
(b) Remove the 2 bolts, 2 springs and 2 nuts, then separate the front exhaust pipe from the exhaust manifold RH.

7. REMOVE MANIFOLD STAY

(a) Remove the 3 bolts and manifold stay.

8. REMOVE EXHAUST MANIFOLD SUB-ASSEMBLY RH

(a) Disconnect the air fuel ratio sensor connector.

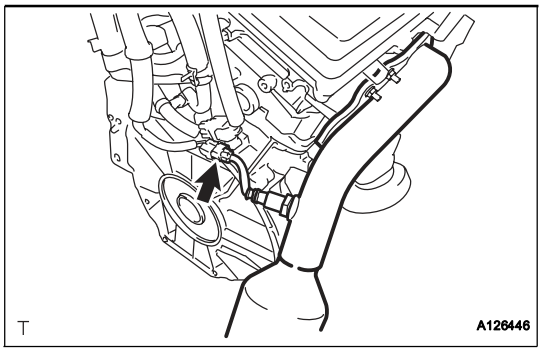

(b) Remove the 6 nuts and exhaust manifold.
(c) Remove the gasket.

9. REMOVE NO. 2 MANIFOLD STAY

(a) Remove the 3 bolts and the No. 2 manifold stay.

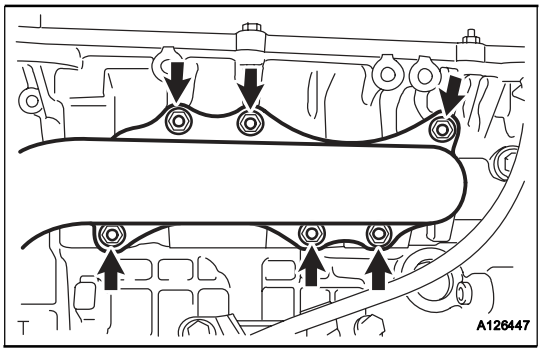

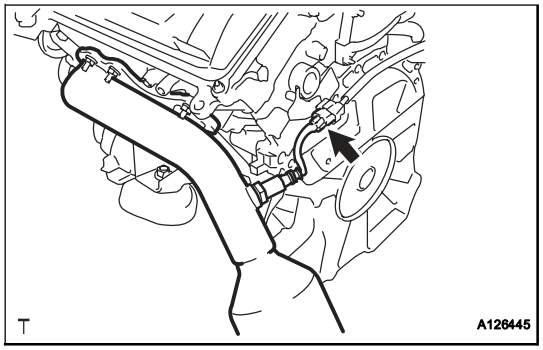

10. REMOVE EXHAUST MANIFOLD SUB-ASSEMBLY LH

(a) Disconnect the air fuel ratio sensor connector.

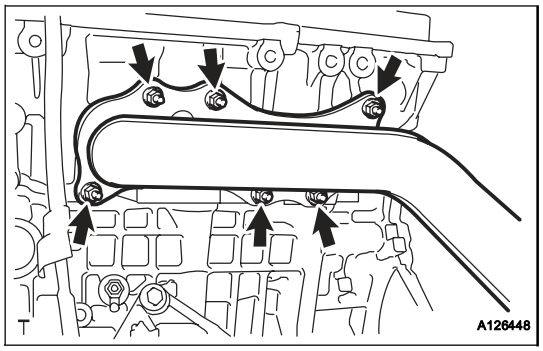

(b) Remove the 6 nuts and the exhaust manifold.

(c) Remove the gasket.

11. DISCONNECT NO. 1 FUEL PIPE SUB-ASSEMBLY (See page FU-13)

12. DISCONNECT NO. 2 FUEL PIPE SUB-ASSEMBLY (See page FU-14)

13. REMOVE INTAKE MANIFOLD

(a) Disconnect the 6 fuel injector connectors.

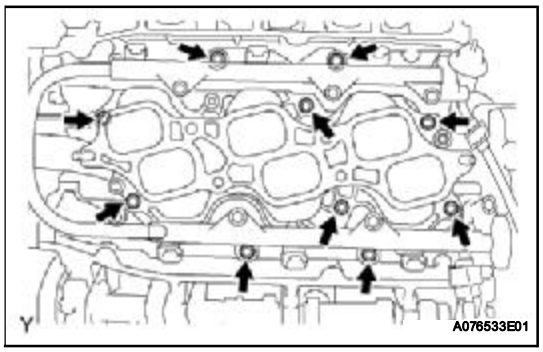

(b) Remove the 10 bolts, then remove the intake manifold and gasket.

14. REMOVE WATER BY-PASS JOINT RR

(a) Disconnect the engine coolant temperature sensor connector.

(b) Disconnect the heater hose.

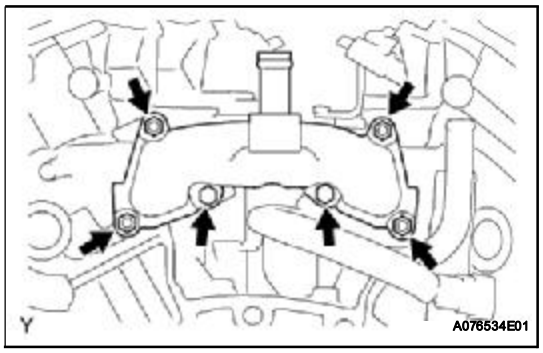

(c) Remove the 2 bolts and 4 nuts, then remove the water by-pass joint RR and 2 gaskets.

(d) Remove the O-ring from the water outlet hose.

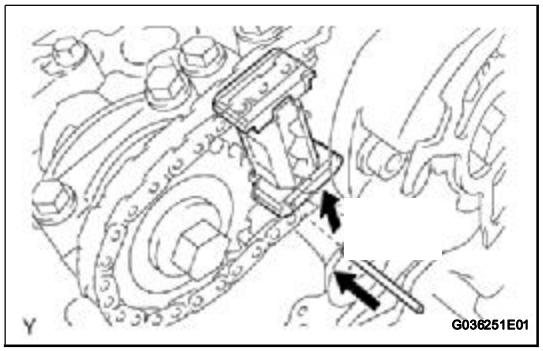

15. REMOVE CAMSHAFT TIMING GEARS AND NO. 2 CHAIN (for Bank 1)

(a) While raising the No. 2 chain tensioner, insert a pin of ϕ 1.0 mm (0.039 in.) into the hole to fix it.

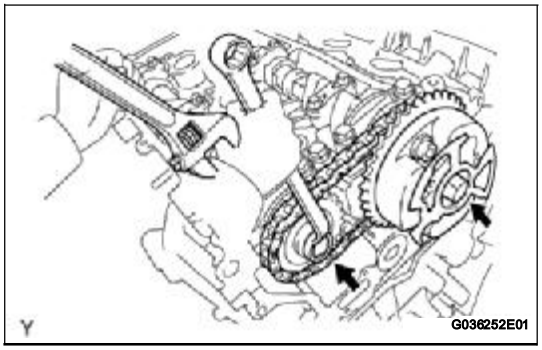

(b) Hold the hexagonal portion of the camshaft with a wrench.
NOTICE:
Be careful not to damage the cylinder head and valve lifter with the wrench.

(c) Remove the 2 bolts, then remove the camshaft timing gear, camshaft timing gear assembly and No. 2 timing chain.
NOTICE:
Do not disassemble the camshaft timing gear assembly.

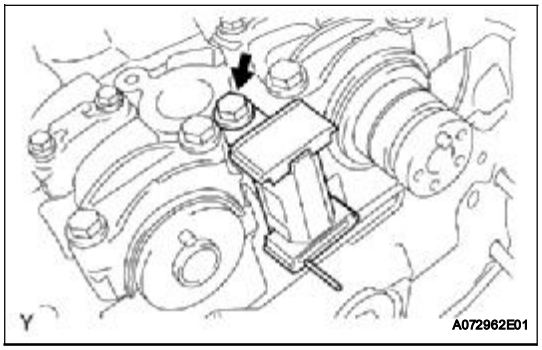

16. REMOVE NO. 2 CHAIN TENSIONER ASSEMBLY

(a) Remove the bolt, then remove the No. 2 chain tensioner.

17. REMOVE CAMSHAFTS (for Bank 1)

NOTICE:
Keep the camshaft level while it is being removed. The camshaft thrust clearance is very small and failing to keep it level could crack or damage the cylinder head journal surface, which receives the thrust force. This could subsequently lead the camshaft to seize or break. Perform the following steps to avoid such problems.

(a) Rotate the camshafts counterclockwise using a wrench so that the cam lobes of No. 1 cylinder face in the directions shown in the illustration.

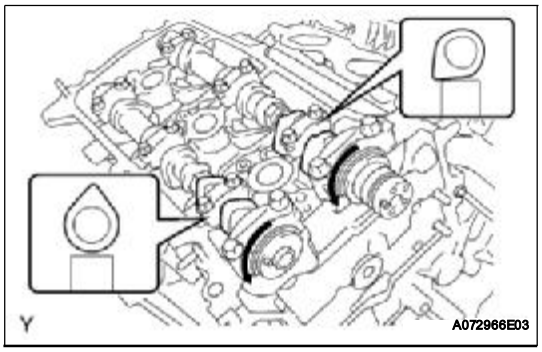

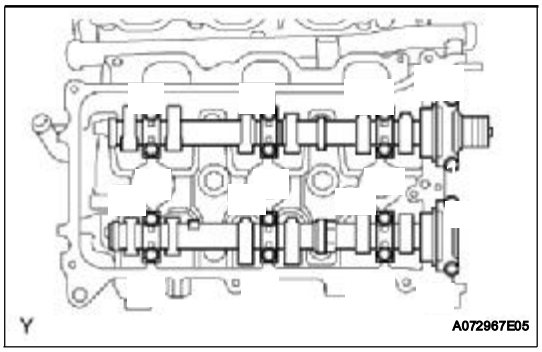

(b) Using several steps, loosen and remove the 16 bearing cap bolts uniformly in the sequence shown in the illustration.

(c) Remove the 8 bearing caps and 2 camshafts.

18. REMOVE NO. 2 CAMSHAFT BEARING

19. REMOVE CYLINDER HEAD SUB-ASSEMBLY

(a) Remove the bolt and separate the ground cable.

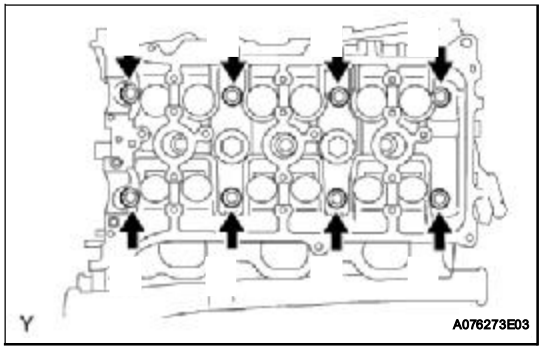

(b) Using several steps, loosen the 8 cylinder head bolts on the cylinder head uniformly with a 10 mm bi-hexagon wrench in the sequence shown in the illustration. Remove the 8 cylinder head bolts and 8 plate washers.

NOTICE:

- **Be careful not to drop the plate washers into the cylinder head.**
- **Cylinder head warpage or cracking could result from removing the bolts in the wrong order.**

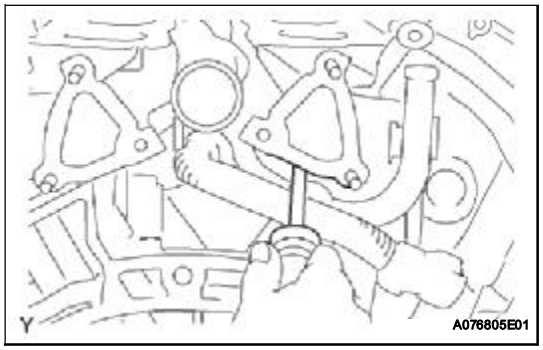

(c) Lift the cylinder head from the dowels on the cylinder block, and place the cylinder head on wooden blocks on a bench.

NOTICE:

Be careful not to drop the plate washers into the cylinder head.

If the cylinder head is difficult to lift off, pry between the cylinder head and cylinder block with a screwdriver.

20. REMOVE CYLINDER HEAD GASKET

21. REMOVE NO. 1 CHAIN VIBRATION DAMPER

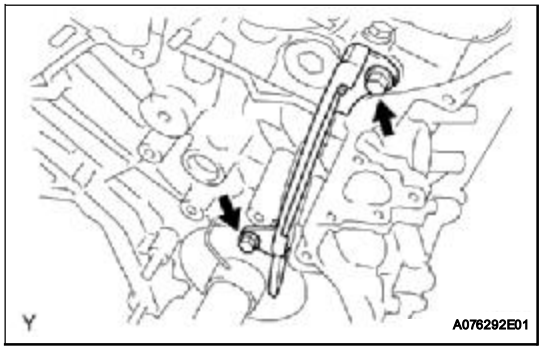

(a) Remove the 2 bolts, then remove the No. 1 chain vibration damper.

22. REMOVE CAMSHAFT TIMING GEARS AND NO. 2 CHAIN (for Bank 2)

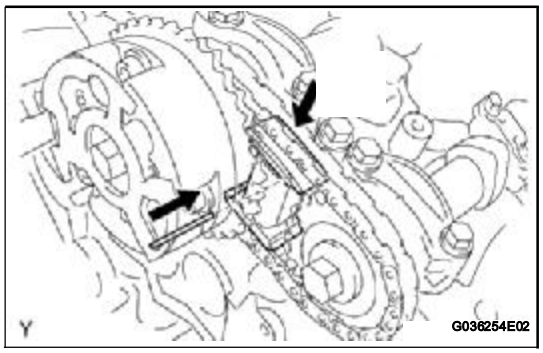

(a) While pushing down the No. 2 chain tensioner, insert a pin of ϕ 10 mm (0.039 in.) into the hole to fix it.

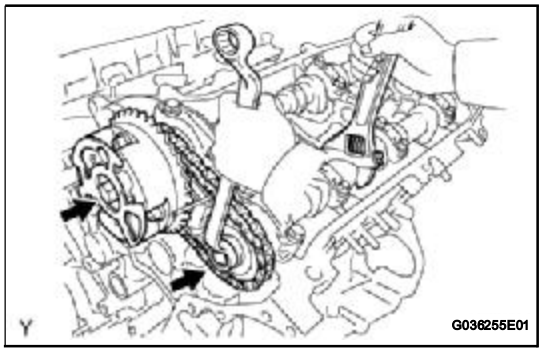

(b) Hold the hexagonal portion of the camshaft with a wrench.

NOTICE:

Be careful not to damage the cylinder head and valve lifter with the wrench.

(c) Remove the 2 bolts, then remove the camshaft timing gear, camshaft timing gear assembly and No. 2 timing chain.
NOTICE:
Do not disassemble the camshaft timing gear assembly.

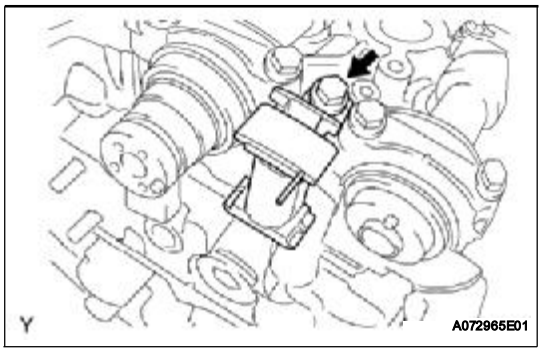

23. REMOVE NO. 3 CHAIN TENSIONER ASSEMBLY
(a) Remove the bolt, then remove the No. 3 chain tensioner.

24. REMOVE CAMSHAFTS (for Bank 2)
NOTICE:
Keep the camshaft level while it is being removed. The camshaft thrust clearance is very small and failing to keep it level could crack or damage the cylinder head journal surface, which receives the thrust force. This could subsequently lead the camshaft to seize or break. Perform the following steps to avoid such problems.

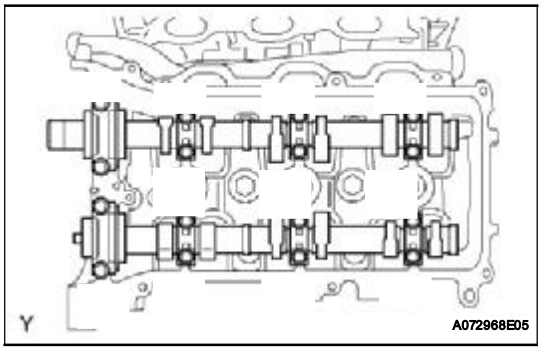

(a) Using several steps, loosen and remove the 16 bearing cap bolts uniformly in the sequence shown in the illustration.
(b) Remove the 8 bearing caps and 2 camshafts.

25. REMOVE CYLINDER HEAD LH
(a) Remove the bolt, then separate the ground cable.
(b) Remove the bolt, then separate the air fuel ratio connector bracket.

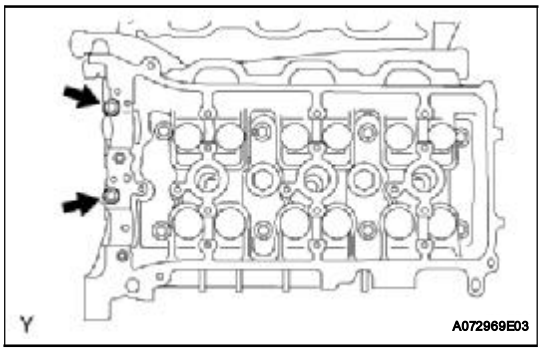

(c) Using several steps, remove the 2 cylinder head bolts from the cylinder head in the sequence shown in the illustration.

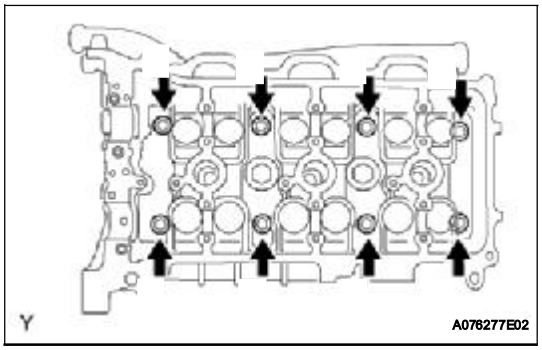

(d) Using several steps, uniformly loosen the 8 cylinder head bolts on the cylinder head with a 10 mm bi-hexagon wrench in the sequence shown in the illustration. Remove the 8 cylinder head bolts and 8 plate washers.
NOTICE:
- **Be careful not to drop the plate washers into the cylinder head.**
- **Cylinder head warpage or cracking could result form removing the bolts in the wrong order.**

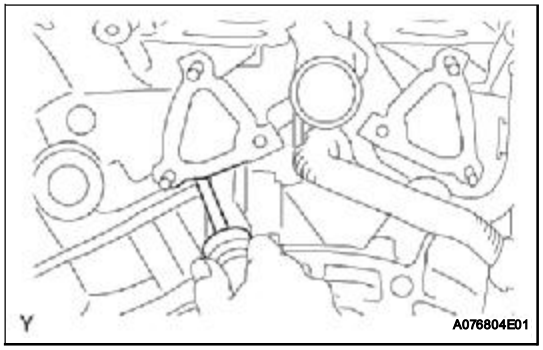

(e) Lift the cylinder head from the dowels on the cylinder block, and place the cylinder head on wooden blocks on a bench.

NOTICE:

Be careful not to drop the plate washers into the cylinder head.

If the cylinder head is difficult to remove, pry between the cylinder head and cylinder block with a screwdriver.

26. REMOVE NO. 2 CYLINDER HEAD GASKET

DISASSEMBLY

HINT:
- Thoroughly clean all parts to be assembled.
- Before installing the parts, apply new engine oil to all sliding and rotating surfaces.
- Replace all gaskets, O-rings and oil seals with new parts.

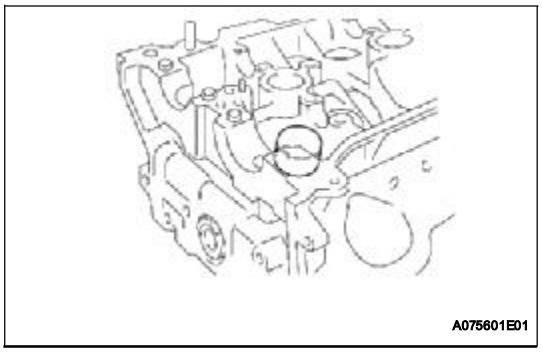

1. REMOVE VALVE LIFTER

HINT:
Arrange the valve lifter in the correct order.

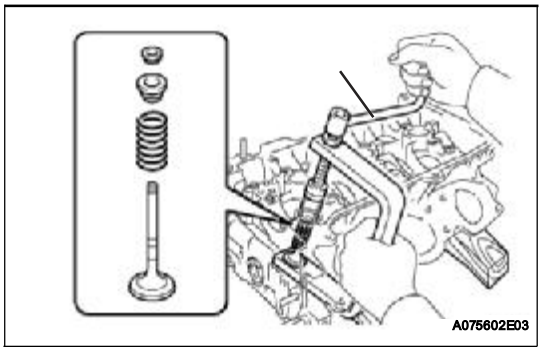

2. REMOVE VALVE

HINT:
Arrange the valves, inner compression springs, valve spring retainers and valve spring retainer locks in the correct order.

(a) Place the cylinder head on a wooden block.
(b) Using SST, compress the inner compression spring and remove the 2 valve spring retainer locks.
SST 09202-70020 (09202-00010)
(c) Remove the valve, inner compression spring and valve spring retainer.

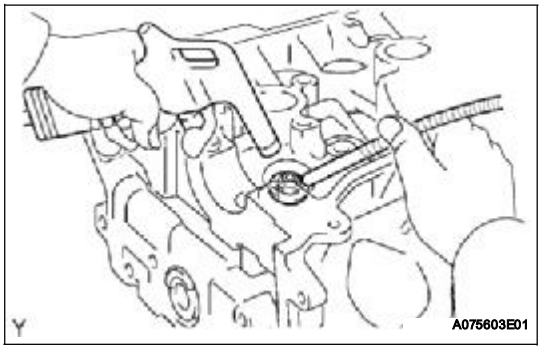

3. REMOVE VALVE SPRING SEAT

(a) Using compressed air and a magnetic finger, remove the valve spring seat by applying compressed air.

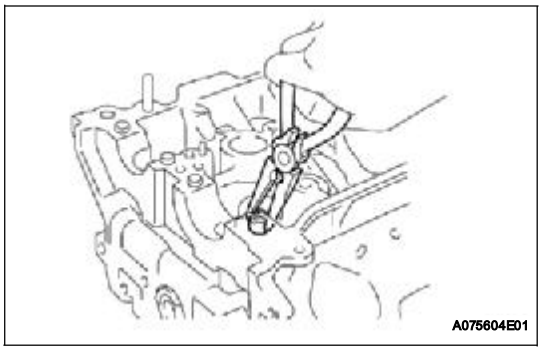

4. REMOVE VALVE STEM OIL O SEAL OR RING

(a) Using needle-nose pliers, remove the valve stem oil seal.

5. REMOVE STRAIGHT PIN NO.1

(a) Remove the 10 knock pins from bank 1 and bank 2 cylinder heads.

6. REMOVE EXHAUST MANIFOLD, RH STUD BOLT

(a) Remove the 20 stud bolts from bank 1 and bank 2 cylinder heads.

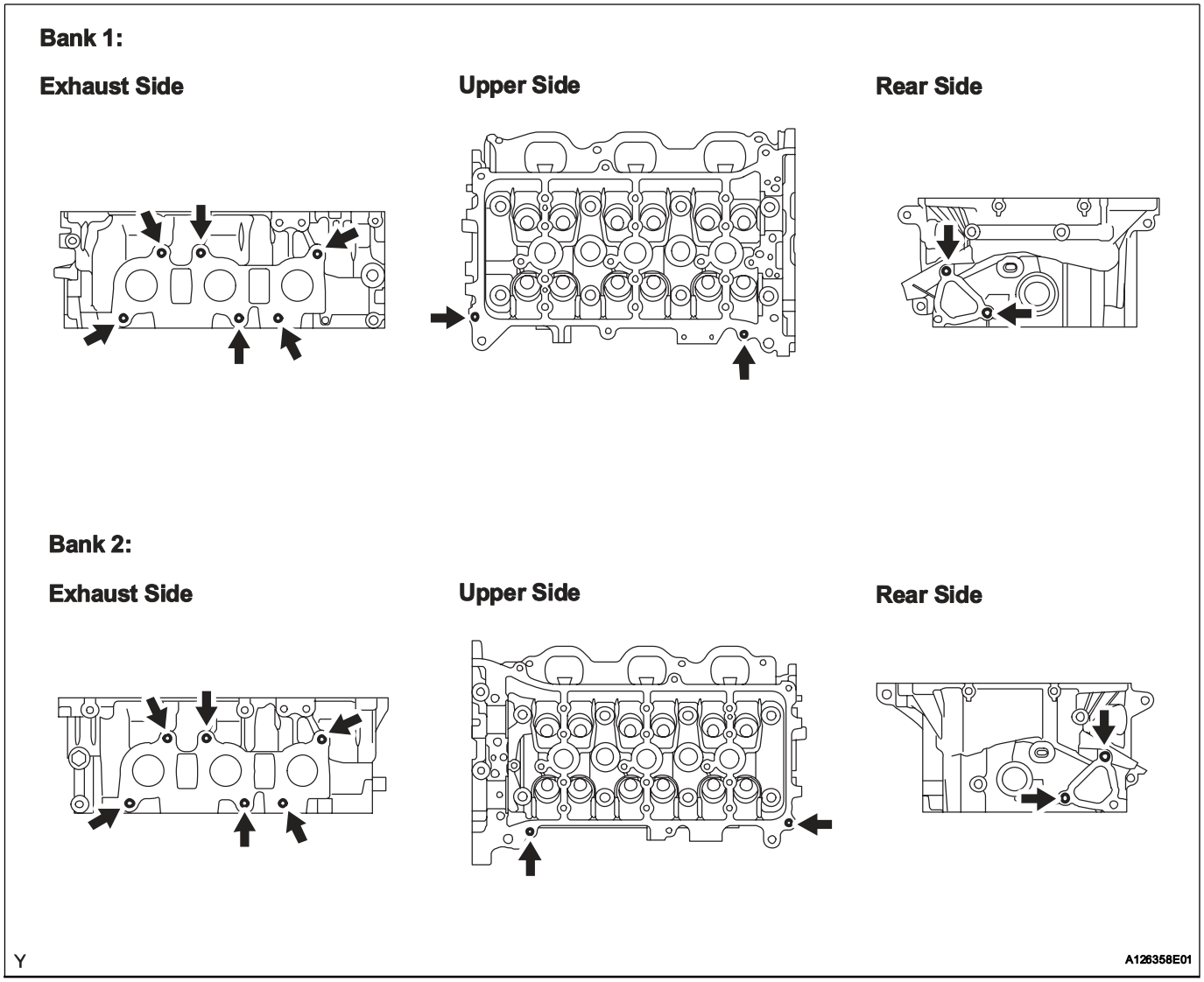

7. REMOVE UNION
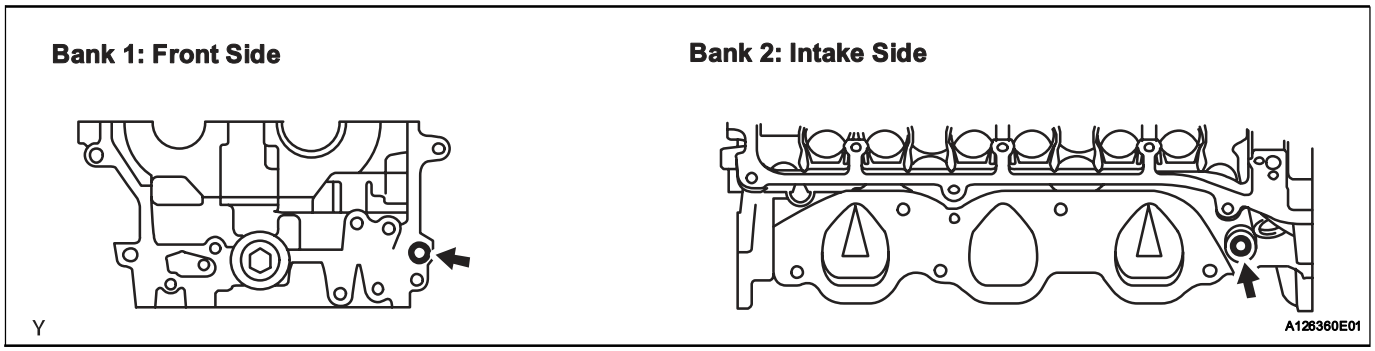
(a) Remove the 2 unions from bank 1 and bank 2 cylinder heads.